Oct. 18, 1966 H. LEMPER 3,278,999

APPARATUS FOR CONTINUOUS CASTING OF METALS

Filed Feb. 4, 1964 2 Sheets-Sheet 1

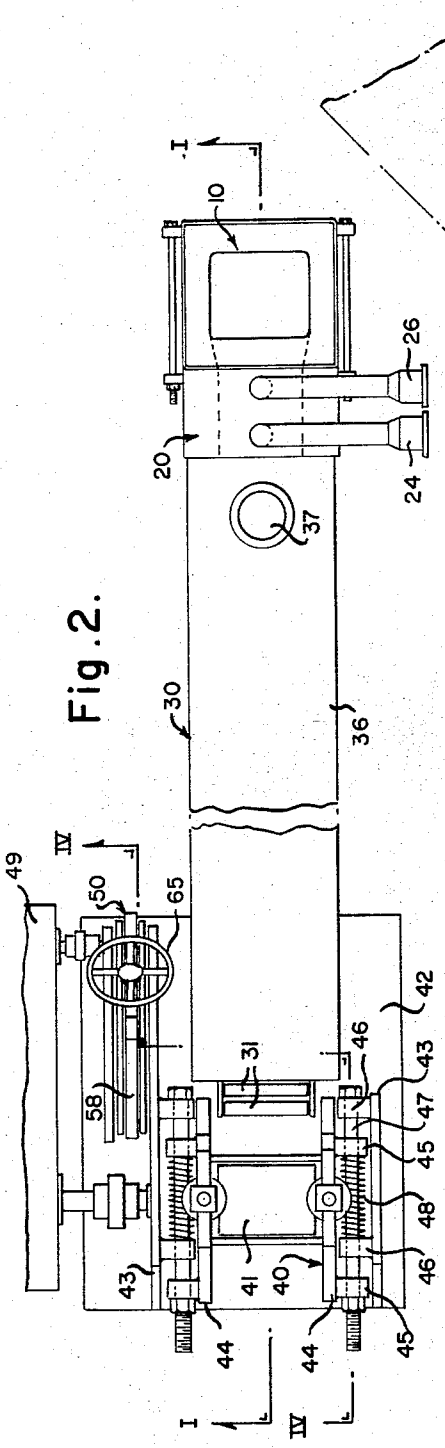

Fig. 2.

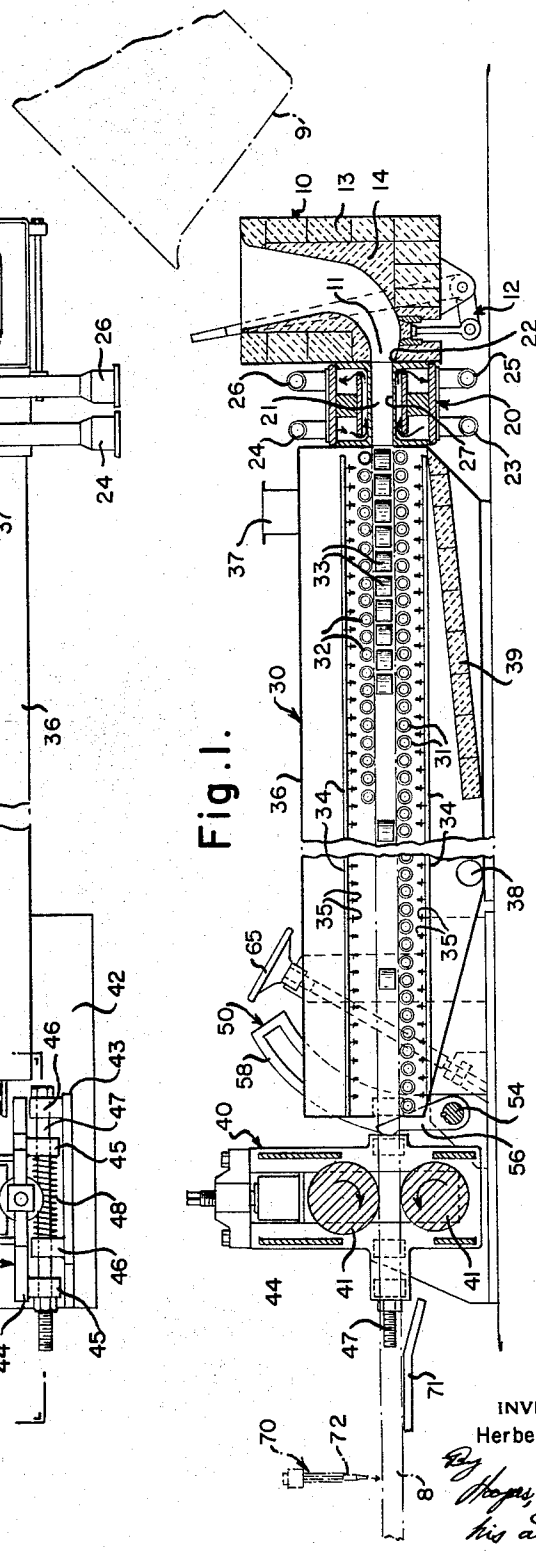

Fig. 1.

INVENTOR
Herbert Lemper
By Hopgood, Calimafde & Kalil
his attorneys

Oct. 18, 1966 H. LEMPER 3,278,999

APPARATUS FOR CONTINUOUS CASTING OF METALS

Filed Feb. 4, 1964 2 Sheets-Sheet 2

Fig. 3.

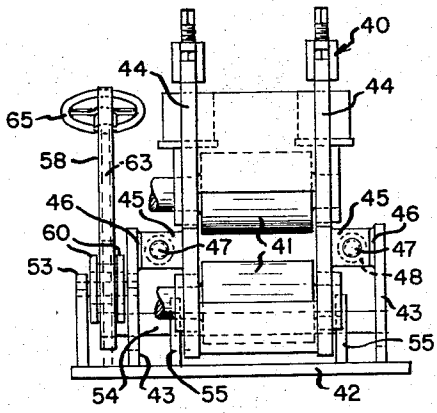

Fig. 4.

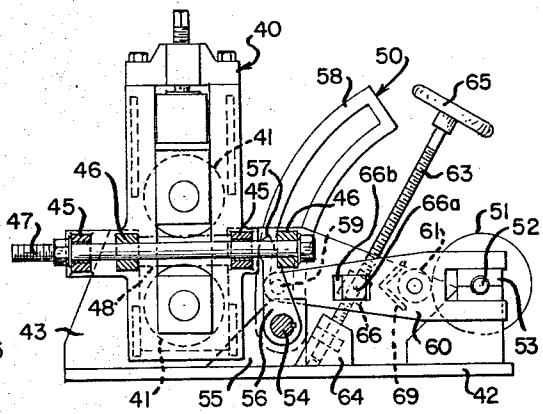

Fig. 5.

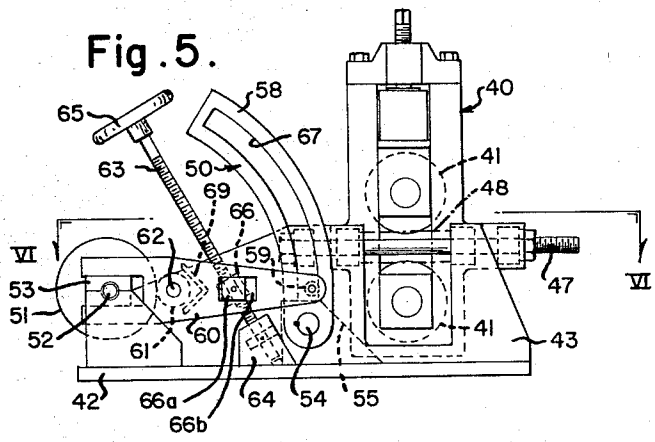

Fig. 6.

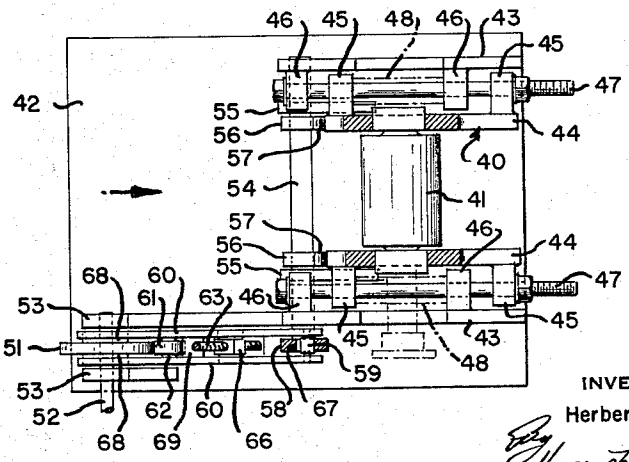

INVENTOR
Herbert Lemper

by Hopgood, Calvert & Duell
his attorneys

United States Patent Office 3,278,999 Patented Oct. 18, 1966

3,278,999

APPARATUS FOR CONTINUOUS CASTING OF METALS

Herbert Lemper, Pittsburgh, Pa., assignor to Mesta Machine Company, a corporation of Pennsylvania

Filed Feb. 4, 1964, Ser. No. 342,374
4 Claims. (Cl. 22—57.2)

This invention relates broadly to continuous casting machines and more particularly to a continuous casting machine that is disposed in a fully horizontal in-line position.

Heretofore, continuous casting machines have for the most part been vertically disposed with a water-cooled flow-through mold having its cavity vertically aligned. Hot liquid metal is poured into a tundish at the top of the machine which feeds hot metal into the mold. The metal passes down through the water-cooled mold and is partially solidified in so doing. The metal slab emanating from the mold drops through a vertical cooling chamber, where the metal is further cooled and solidified. Continuing its vertically downward passage the metal slab passes through a withdrawal mechanism such as pinch rolls and a bending roll mechanism which turns the slab through a 90° arc to the horizontal, from there the slab advances through a straightening device and into a cut-off device where the slab, which is continuous of course, is cut off into billets of desired length. Vertical units such as just described require generally 75 ft. or higher roof clearance and about the same in length of floor space. They also require a great deal of supporting superstructure as well as catwalks and the like to attend the machine.

Recently, efforts to shorten and simplify these machines have resulted in the development of so-called horizontal continuous casting machines, which is a misnomer because in reality they are only partly horizontal. This improvement came about through the development of curved molds and cooling chambers which casts a curve into the slab and eliminates the need for the long straight drop in a cooling chamber and bending the slab to the horizontal for straightening and cut-off. This successfully cut the height of the machine to about one-third of what it was before, i.e., about 25 to 30 ft.; the length of the machine, however, remained about the same because of the slab straightening equipment still required.

A good description of the prior art outlined above has been published in the June 17, 1963, issue of Steel, The Metalworking Weekly, beginning at page 71 thereof.

One of the principal reasons why a fully horizontal machine has not been forthcoming is that in continuous casting machines it is necessary to oscillate the mold so that the slab being cast properly emanates from the mold without hanging up or sticking in the mold. This is a simple matter on vertically disposed molds as they are merely oscillated up and down to break the sides of the slab loose from the cavity walls of the mold. The tundish feeding the mold is generally stationary above the mold and the oscillating of the mold up and down presents no inconvenience or difficulty in directing hot metal from the tundish into the mold, nor from the ladle into the tundish which, as mentioned, is standing still. However, a horizontally disposed mold presents a serious problem in this respect as the tundish must be sealed to the mold for proper horizontal feeding. Attempts to overcome this problem have been made by elongating the tundish so that it may be oscillated and still permit pouring into it from a non-oscillating ladle, however, the elongated tundish presents a larger area of exposed metal where undesirable preliminary cooling of the hot metal can take

place. But, most of all, the oscillating of the tundish is undesirable because of the slopping created thereby.

I have discovered another and better way of causing oscillation to take place between the mold walls and the metal being cast in a truly horizontal machine and that is by oscillating the pinch roll withdrawal equipment and making the mold and tundish stationary with a sealed connection between them.

This permits an in-line fully horizontal casting machine that is commercially practicable with attendant advantages that are truly remarkable. The size of the machine is dramatically reduced. The height of a machine comparable to the earlier described vertical machines is only about 4 ft. and the length about 20 ft. A space 40 ft. long and 10 ft. high would be sufficient to accommodate pouring from a ladle (height) and cutting off billets of ordinary size (length); however, it is preferable to allow 60 ft. for length to permit billets of most any desired length to be cut off, and too, to allow room for the starting or dummy bar to pay out in addition to the first billet being cut off. The savings in height is obviously accomplished by making the machine fully horizontal, while the savings in length is due to the total elimination of the bending and straightening mechanisms. There are also great savings in supporting structure and in the building itself formerly needed to house the machine which those skilled in the art will readily appreciate. It simplifies, too, the cooling aprons which now need only contain the slab initially adjacent the mold rather than through the entire cooling chamber as heretofore, the balance of my cooling aprons simply providing support and direction to the slab.

I provide a method for continuous casting of elongated metal bodies comprising the steps of casting hot liquified metal into tundish means having an aperture opening horizontally into a horizontally disposed cavity of a water-cooled flow-through mold, there being a sealed connection between said aperture and said cavity, directing said liquified metal horizontally through said cavity into horizontally disposed cooling chamber means, said liquified metal partially cooling and solidifying in said mold and emanating therefrom as an elongated metal body, directing said elongated metal body horizontally through said cooling chamber means and further cooling and solidifying said elongated metal body, directing said elongated metal body horizontally into pinch roll means adapted to pull and advance said elongated metal body from said mold, oscillating said pinch roll means in horizontal directions parallel to the travel direction of said elongated metal body, and directing said elongated metal body from said pinch roll means horizontally to cut-off means and cutting off said elongated metal body into billets of desired lengths, whereby said elongated metal body is cast in a completely horizontal position.

I provide apparatus for carrying out the above method comprising, in combination, tundish means having an aperture opening horizontally into a horizontally disposed cavity of a water-cooled flow-through mold, there being a sealed connection between said aperture and said cavity, horizontal cooling chamber means adjacent said mold for containing and cooling the cast metal body emanating from said mold, pinch roll means adjacent said cooling chamber means adapted to pull and advance the cast metal body from said mold through said cooling chamber means and said pinch roll means to cut-off means disposed on the opposite side of said pinch roll means from said cooling chamber means, said pinch roll means being mounted for reciprocal horizontal movement parallel to the travel direction of said cast metal body and oscillating means for imparting said reciprocal horizontal movement to said pinch roll means, whereby said metal body is continuously cast in a single horizontal plane.

I further provide that said tundish aperture, mold cavity, cooling chamber means, pinch roll means and cut-off means are disposed consecutively in a straight line whereby said metal body is cast in a completely in-line horizontal position.

In addition, said cooling chamber means preferably comprises a portion adjacent said mold having two groups of guide rollers in direct contact with opposite sides of the cast metal body adapted to contain said body emanating from said mold and a portion downstream of said first mentioned portion having only lower support rollers and side guide rollers to support and guide said body to said pinch roll means, said cooling chamber means having spray means extending along the length thereof adapted to spray coolant on said cast metal body.

I also preferably provide that the drive means for imparting reciprocal horizontal movement to said pinch roll means include means for changing the frequency and length of stroke of said reciprocal horizontal movement.

Other details, objects and advantages of the invention will become apparent as the following description of a present preferred embodiment and a present preferred method of practicing the same proceeds.

In the accompanying drawings, I have shown a present preferred embodiment of the invention and have illustrated a present preferred method of practicing the same in which

FIGURE 1 is a partial longitudinal cross-sectional view of my fully horizontal continuous casting machine taken on the line I—I of FIGURE 2;

FIGURE 2 is a partial top plan view of my fully horizontal continuous casting machine;

FIGURE 3 is an end elevational view of the machine as viewed from the left of FIGURE 1;

FIGURE 4 is a sectional view of the pinch roll stand and oscillating mechanism of my machine taken along the line IV—IV of FIGURE 2;

FIGURE 5 is a side elevational view of the pinch roll stand and oscillating mechanism as viewed from the left of FIGURE 3; and

FIGURE 6 is a horizontal sectional view taken on the line VI—VI of FIGURE 5.

Referring now to the drawings and initially to FIGURE 1, I provide generally a tundish **10**, a flow-through mold **20**, cooling chamber means **30**, a pinch roll stand **40** having oscillating means **50** and cut-off means **70**. It should be noted that in accordance with the invention, these portions of the machine are disposed consecutively and horizontally in a straight line so that the metal slab is cast in an in-line fully horizontal position.

As shown in FIGURE 1, tundish **10** has a horizontally disposed aperture **11** which opens into the horizontally disposed cavity **21** of mold **20**. It should be noted that there is a sealed connection as at reference **22** between aperture **11** and cavity **21**. Tundish **10** is conventionally lined as illustrated and indicated by references **13** and **14** to preserve its sides and maintain the heat of the hot metal poured into it from ladle **9** and has suitable draining apparatus **12** for clean out purposes.

Mold **20** is a water-cooled flow-through type mold and the cooling system and circulation is clearly illustrated by arrows in FIGURE 1 with water entering into mold **20** at openings **23** and **24** and exiting therefrom at openings **25** and **26**. The walls **27** of cavity **21** are thus cooled to prevent their destruction by the hot metal entering cavity **21** and moreover to partially cool and solidify the outer surfaces of the slab being cast.

Cooling chamber **30** is adjacent the side of the mold from which the slab being cast is emanating and has a roller spray apron having a lower roller bank **31**, an upper roller bank **32** and side roller banks **33**. These roller banks not only support the emanating metal slab but are positioned such that they contain the slab for a portion thereof adjacent mold **20** against buckling and breakout. As illustrated in FIGURE 1, further downstream from

mold **20** in cooling chamber **30** the upper roller bank may be dispensed with, for by the time the slab reaches this portion it has been sufficiently cooled and solidified that it need not be contained but rather only supported and guided by roller banks **31** and **33**. Cooling chamber **30** also has a spraying system **34** entering over the full length of cooling chamber **30** which sprays coolant, generally water, on the slab as it passes therethrough to cool and further solidify the slab. As shown in FIGURE 1, nozzles **35** of spray system **34** are disposed both above and below the slab at stations located between the rolls of the roller banks. Cooling chamber **30** is suitably housed as by housing **36** to contain the flying spray within the housing. Appropriate fog exhaust means **37**, drain **38** and protective refractory material **39** are also provided to respectively exhaust steam and spray fog, to drain the coolant from the chamber and to protect the base of the chamber from hot metal drippings or runout adjacent mold **20**.

Next in line downstream of cooling chamber **30** is the withdrawal equipment or pinch roll stand **40**. Pinch roll stand **40** has pinch rolls **41** which, as illustrated in FIGURE 1, are disposed above and below the slab and engage or pinch the slab. Pinch rolls **41** are rotated in the respective directions indicated by the arrows which by virtue of their pinching the slab pull or withdraw the slab from mold **20**. The pinch rolls are of course adjustable to different slab thicknesses and they are driven by a variable speed drive generally shown at reference **49** (see FIGURE 2) so that the speed of the rolls and consequently the travel speed of the slab may be varied to suit operating conditions. The roll drive mechanisms are well within the knowledge of those skilled in the art and for that reason will not be expanded upon.

In accordance with the invention, pinch roll stand **40** is mounted for reciprocal horizontal oscillation and is oscillated so that the slab is broken loose in mold **20** according to the frequency of oscillation. Referring to FIGURES 2 and 3, pinch roll stand **40** is mounted on a base having a base plate **42** and a pair of upstanding side plates **43**. As best shown in FIGURES 2 and 6, the side plates **44** of pinch roll stand **40** carry lugs **45** and the side plates **43** of the base carry lugs **46**. Lugs **45** and **46** on the respective side plates have openings or bores that are aligned to receive therethrough rods **47**. As illustrated in FIGURE 3, pinch roll stand **40** is supported on rods **47** through lugs **45**. Referring again to FIGURE 2, springs **48** are centrally disposed on rods **47**. Each spring **48** being disposed between a lug **45** of a side plate **44** and a lug **46** of a side plate **43**. As further shown, rods **47** are disposed in a direction axially parallel to the slab line of travel. From the drawings and the foregoing description it is clear that pinch roll stand **40** is movable along rods **47** in directions parallel to the travel direction of the slab being cast. It should also be clear that when pinch roll stand **40** is advanced away from cooling chamber **30** it will pull or tug the slab in the direction of travel of the slab and break the slab loose in mold **20** and advance the slab therefrom. It is also clear from FIGURE 2 that as pinch roll stand **40** is so advanced, springs **48** are compressed on rods **47** between lugs **45** and **46**. This spring pressure is sufficient to return pinch roll stand **40** to its original position immediately adjacent cooling chamber **30** as the forces advancing pinch roll stand **40** are abated.

I also provide an oscillating means **50** which is illustrated in FIGURES 3 through 6. Referring to FIGURE 4, oscillating means **50** is mounted on base plate **42** and comprises a cam **51** keyed to a shaft **52** rotatably mounted in suitably bushed trunnions **53**. Cam **51** is rotated preferably by drive means **49** also (see FIGURE 2) so that the rotation of cam **51** may be synchronized to a desired degree with the rotation of rolls **41**. Referring still to FIGURE 4, adjacent the upstream or forward end of pinch roll stand **40**, a shaft **54** is rotatably mounted in suitably bushed trunnions **55** secured to base plate **42**. Keyed to shaft **54** are a pair of lever arms **56** which have pads **57**

at the ends thereof which bear against the leading edges of side plates **44** of pinch roll stand **40** (see FIGURE 6). Also keyed to shaft **54** is a lever arm **58**. As best shown in FIGURES 3 and 5, lever arm **58** is disposed on shaft **54** outboard of pinch roll stand **40**. It will be understood therefrom that any movement of lever arm **58** will be translated into rotation of shaft **54**, swinging of lever arms **56** and movement of pinch roll stand **40** along rods **47**.

As shown in FIGURE 5, lever arm **58** is arced and has an arced window **67** therein. A roller **59** extends axially through the window and is rotatably mounted between the ends of two pusher arms **60** disposed on either side of lever arm **58** (see FIGURE 6). Pusher arms **60** are bifurcated at their other ends which are slidably mounted on guide blocks **68** which in turn are swingably mounted on shaft **52** on either side of cam **51**. A cam follower **61** is rotatably disposed adjacent cam **51** on a shaft **62** extending between and secured in pusher arms **60**. From this it will be understood that pusher arms **60** are moved as cam follower **61** is moved by cam **51** and that consequently lever arm **58** is moved also, which is translated into pinch roll stand **40** movement as earlier described. Thus as shown and described each rotation of cam **51** produces an oscillation of pinch roll stand **40**. It will be understood, of course, that the cam surface can be altered to produce a multiplicity of oscillations per cam rotation if desired. For present purposes of illustration, however, I have illustrated a cam that produces one oscillation per revolution.

To vary the length of stroke of the oscillation, I provide a threaded shaft **63** extending from base plate **42**, to which it is rotatably anchored in support member **64**, upwardly between pusher arms **60** and beyond, ending in a hand wheel **65** keyed to shaft **63**. A threaded nut **66** is disposed on shaft **63** and is swivelably connected to guide blocks **66***a* slidably disposed in windows **66***b* cut in pusher arms **60**. A spacer **69** is rigidly connected between pusher arms **60** to hold pusher arms **60** rigidly together. From FIGURES 4 and 5, it is clear that by turning wheel **65**, nut **66** is caused to move up or down shaft **63** which in turn swings pusher arms **60** about shaft **52** and raises or lowers roller **59** in window **67** of lever arm **58**.

It will be understood that by virtue of the arc of lever arm **58** and its window **67**, the degree of rotary movement of lever arm **58** will depend upon where roller **59** bears upon it when pusher arms **60** are moved by cam **51**. It is also clear from the showing of FIGURES 4 and 5 that the higher roller **59** is in window **67**, the less distance lever arm **58** will be rotated, and the less distance pinch roll stand **40** will be oscillated. It is believed that a range of from 0.3 inch to 2.0 inch is most suitable for the oscillation stroke length needed to handle most operations and accordingly the arc and length of lever arm **67** as shown accommodates this range with the longer stroke setting of 2.0 inch being at the lower end of window **67**, and the shorter stroke setting of 0.3 inch being at the upper end of window **67**. FIGURES 4 and 5 show the pusher arms at the 2.0 inch setting with the high lobe of cam **51** bearing against cam follower **61** so that pinch roll stand **40** is at its stroked or advanced position away from cooling chamber **30** which is the position pinch roll stand **40** is in when it has just finished tugging or advancing the slab from mold **20**. From this it is clear that the length of movement of pinch roll stand **40** on rods **47** may be set anywhere between 0.3 inch to 2.0 inch and will be set by the operator in accordance with the needs of the slab being cast.

Downstream from pinch roll stand **40** is cut-off means **70**. Cut-off means **70** includes a long support **71** on which slab **8** is run out and is shown generally in FIGURE 1 and may comprise any one of a number of suitable means for cutting off lengths of the cast slab into slabs of desired length. Generally, for the slabs contemplated to be cast in my machine, it is necessary to use a torch type cut-off **72** which travels with the slab as it emanates from the pinch roll stand and burns off the slab during its travel away from the pinch roll stand and then returns toward the pinch roll stand to make the next cut-off. This type of cut-off is well known to those skilled in the art and thus will not be further expanded upon except to say that it is in-line horizontally with the rest of the machine so that the slab is cast and the billet cut off in a single straight line horizontal position.

In describing my new method of casting elongated metal bodies such as slabs and referring to FIGURE 1, I cast hot liquid metal from ladle **9** into tundish **10** having an aperture **11** that opens horizontally into a horizontally disposed water-cooled flow-through mold **20**, the metal is directed horizontally through cavity **21** of mold **20** where it is partially cooled and solidified and emanates therefrom into horizontally disposed cooling chamber **30** where it is further cooled and solidified, the cast metal body is then directed horizontally through pinch roll stand **40** to cut-off means **70** where it is cut off into billets of desired length. Rollers **41** of pinch roll stand **40** grip the slab and pull and advance the slab from mold **20**. Pinch roll stand **40** is oscillated so that the slab is tugged or pulled at intervals to break it loose from the walls **27** in mold **20**. Oscillating means **50** is variable to change both the frequency and length of stroke in the oscillation of pinch roll stand **40**.

The speed of rolls **41**, the frequency and length of stroke as well as the speed of the stroke are all selected and set by the operator in accordance with operating conditions and will depend upon such things as slab size, the material being cast, the material of the cavity walls of the mold and the temperatures of the coolant and molten metal.

These operational matters are within the skill of those skilled in the art and need not be discussed in describing the present invention.

While I have shown and described a present preferred embodiment of the invention and have illustrated a present preferred method of practicing the same, it is to be distinctly understood that the invention is not limited thereto but may be otherwise variously embodied and practiced within the scope of the following claims.

I claim:

1. Apparatus for continuous casting of elongated metal bodies comprising, in combination, tundish means having an aperture opening horizontally into a horizontally disposed cavity of a water-cooled flow-through mold, there being a sealed connection between said aperture and said cavity, horizontal cooling chamber means adjacent said mold for containing and cooling the cast metal body emanating from said mold, pinch roll means adjacent said cooling chamber, means adapted to pull and advance the cast metal body from said mold through said cooling chamber means and said pinch roll means to cut-off means disposed on the opposite side of said pinch roll means from said cooling chamber means, said pinch roll means being mounted for reciprocal horizontal movement parallel to the travel direction of said cast metal body and oscillating means for imparting said reciprocal horizontal movement to said pinch roll means, whereby said metal body is continuously cast in a single horizontal plane.

2. Apparatus for continuous casting of elongated metal bodies as claimed in claim **1** wherein said tundish aperture, mold cavity, cooling chamber means, pinch roll means and cut-off means are disposed consecutively in a straight line whereby said metal body is cast in a completely in-line horizontal piston.

3. Apparatus for continuous casting of elongated metal bodies as claimed in claim **1** wherein said cooling chamber means comprises a portion adjacent said mold having two groups of guide rollers in direct contact with opposite sides of the cast metal body adapted to contain said body

emanating from said mold and a portion downstream of said first mentioned portion having only lower support rollers and side guide rollers to support and guide said body to said pinch roll means, said cooling chamber means having spray means extending along the length thereof adapted to spray coolant on said cast metal body.

4. Apparatus for continuous casting of elongated metal bodies as claimed in claim 1 wherein said oscillating means for imparting reciprocal horizontal movement to said pinch roll means includes means for changing the frequency and length of stroke of said reciprocal horizontal movement.

References Cited by the Examiner

UNITED STATES PATENTS

2,740,177	4/1956	Smart	22—200.1
3,045,299	7/1962	Steigerwald	22—57.2

FOREIGN PATENTS

1,340,276	9/1963	France.
334,392	1/1959	Switzerland.

J. SPENCER OVERHOLSER, *Primary Examiner.*

R. S. ANNEAR, *Assistant Examiner.*