Feb. 4, 1936. J. J. HOLLAND 2,029,483

WATER SYRINGE

Filed Aug. 15, 1934

Fig. 1.

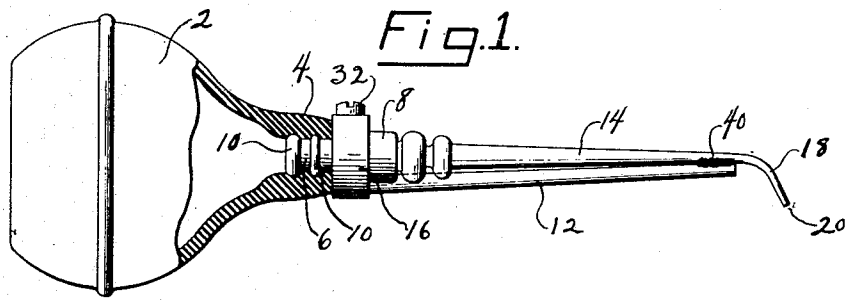

Fig. 2.

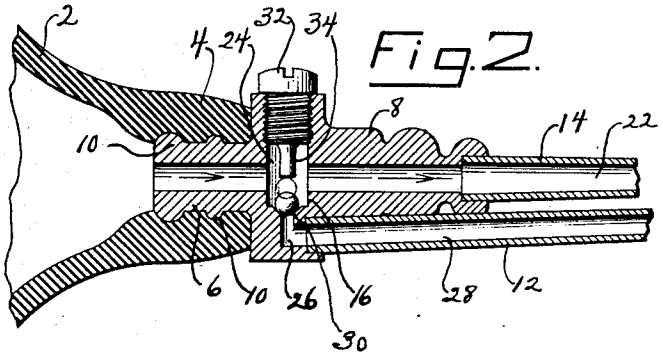

Fig. 3.

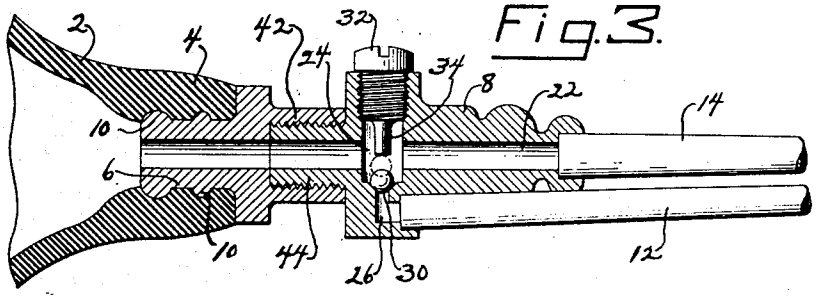

INVENTOR
JAMES J. HOLLAND.
BY
Harry Langsam
ATTORNEY

Patented Feb. 4, 1936

2,029,483

UNITED STATES PATENT OFFICE

2,029,483

WATER SYRINGE

James J. Holland, Parkesburg, Pa.

Application August 15, 1934, Serial No. 739,879

4 Claims. (Cl. 128—231)

This invention relates to syringes and more particularly relates to collapsible-bulb, plunger-piston, or pump type liquid or air syringes.

Heretofore, syringes have consisted merely of a rubber bulb or pump communicating with a simple single duct nozzle. These devices are objectionable, particularly for use with liquids, because the liquid must be drawn into the fluid chamber through the single aperture which is generally of small size and a considerable period of time must, therefore, elapse before the fluid chamber can be filled. Furthermore, if the syringe is used as a blower or air bellows, it is likely to inspire particles of the detritus sought to be blown away. Such matter may accumulate and eventually foul the nozzle, or it may cause damage by being forcibly shot at the object being blown.

The primary object of my invention is to provide a syringe which overcomes the above defects.

Another object of my invention is to provide a syringe whose fluid chamber may be filled with extreme rapidity.

Still another object of my invention is to provide a syringe which automatically cleans itself.

A further object of my invention is to produce a syringe having a distinct and separate inspiratory duct.

Another important object of my invention is to provide an improved device of unusual stability. This stability or added strength is obtained by the double tube construction; the tubes may be cast bronze or otherwise joined together.

Still a further object of my invention is to provide an improved device of the character described, of simple, inexpensive and efficient construction and having a maximum efficiency while requiring a minimum of space.

With the above and other objects in view, which will become apparent as the description proceeds, my invention embodies a syringe having a bulb and a communicating nozzle comprising an outlet duct of the customary type, an auxiliary inspiratory duct protruding less than the outlet duct but having a considerably larger external opening, and a valve which permits inspiration through the auxiliary duct but prevents exhaust therethrough.

The invention, both as to details of construction and combination of parts, will best be understood from the following description of specific embodiment when read in connection with the accompanying drawing, in which:

Fig. 1 is a side elevational view of my improved syringe with the bulb or pump partly in section;

Fig. 2 is a fragmentary sectional elevational view of my improved syringe showing the valve mechanism and intercommunicating passages; and

Fig. 3 is a fragmentary sectional view of a modification of my syringe in which the nozzle is formed of two separable sections coupled by screw-threads, the inspiratory and exhaust tubes not being shown in cross-section.

Referring to the drawing, I have shown in Fig. 1 a syringe consisting of a fluid receptacle or chamber, such as a collapsible rubber bulb or pump having a throat 4 in which is inserted by a force fit, the stem 6 of a nozzle or coupling 8. The stem 6 is provided with two annular ribs or bosses 10 which further tenses the throat 4 and secures a stronger union between bulb and nozzle.

The nozzle 8 consists essentially of an inspiratory duct or tube 12 and an exhaust duct or tube 14 intercommunicating at the head end by means of a ball-check valve 16. The exhaust tube 12, which is a continuation of the stem 6, is straight for the greater part of its length and is gradually tapered toward its outer end 18 which is curved so that its orifice 20 is at an angle with the straight portion. The longitudinal passage 22 of the exhaust tube 14 opens into the bulb or pump 2 through the stem 6. The inspiratory tube 12 lies adjacent to and parallel with the exhaust tube 14, is cylindrical throughout, terminates at the end of the straight portion of the tube 14, and is located with respect to said tube 14 on the side toward which end 18 is curved. The external opening of said tube 12 is much larger in sectional area than the orifice 20. The ball check valve 16 consists of a transverse passage 24 communicating both with the exhaust passage 28, the passage 24 converging to an opening 26 as large as the opening 28 or larger at a point between passages 22 and 28, the converging portion of the passage 24 forming a spherical seat for a ball 30. A screw-threaded plug 32 having a narrowed end 34 permits the transverse passage 24 to be sealed after insertion of the ball 30.

The operation of the device is as follows: collapsing of the bulb or pump 2, by compression, creates a pressure within the bulb which relieves itself by exhausting the compressed air or other fluid through passage 22 and orifice 20. The pressure in the passage 22 is communicated to the transverse passage 24 and in attempting to relieve itself by means of the constricted pas-

sage 26 forces ball 30 into its seat, where it is held by the aforesaid pressure. When the bulb is released, the tension in the rubber creates a suction which draws air or other fluid into said bulb via passage 22 and also passage 28, the valve 16 now being open by reason of the external pressure forcing ball 30 from its seat and permitting flow from passage 28 into passage 24 and thus to the bulb. The end 34 of plug 32 limits the movement of ball 30 so that the ball is always in position to be forced into its seat, and so that the passage 22 is not impeded thereby.

My improved syringe, when used, for example, by a dentist in washing a patient's mouth, is operated by first compressing the bulb, thus expelling the air, then is placed into water or other liquid, and the bulb released. The liquid is drawn into the bulb through both passages 22 and 28, at a relatively great rate, through tube 12 and at an ordinary rate through tube 14, due to the small size of orifice 20 compared with the large size of the external opening of inspiratory tube 12.

In the construction of my nozzle, it is preferable, but not essential, that the ball valve and other parts be made of non-corroding metal such as bronze, brass or silver. The tubes 12 and 14 may be either separate tubes welded or soldered near their termini as at point 40, as illustrated in Fig. 1, or they may be formed integrally.

A modification of my invention is illustrated in Fig. 3 to illustrate that the principle of the invention is adapted to a syringe in which the outlet tubes of the nozzle are removable from the stem for purposes of sterilizing by immersing in boiling water, or otherwise. As all the parts with the exception of a screw-threaded coupling are identical with the device illustrated in Figs. 1 and 2, they have been correspondingly numbered for purposes of ready identification. The nozzle 8 of Fig. 3 is provided with a screw-threaded separable coupling between the stem 6 and the rest of the nozzle comprising a threaded female coupling 42 forming the outer part of the stem 6, and a threaded male portion 44 forming the inner part of the remainder of the nozzle and cooperating with said female portion 42 to produce a rigid joint with the longitudinal passage 22 extending therethrough without obstruction.

It can readily be seen that by far the greater amount of the fluid taken into this syringe enters by the inspiratory passage 28, and thus results in the advantageous feature that the said fluid is not forced in and out the same passage.

Furthermore, when this device is to be used as an air blower, the inspiration is not from the same point nor in the same direction as the exhaust, and thus is not likely to draw in particles of the matter sought to be blown away, particularly as the inspiratory opening is relatively large and thus results in a reduced velocity of flow.

My invention is particularly adapted for use by the dentist for washing out the socket left when a tooth is extracted; and it is, also, adapted for chilling plate impressions taken by the dentist for plate impression work. The hereinbefore noted advantages are obtained by the free and unimpeded double intake, and an outlet or discharge tube reduced in cross sectional area in order to maintain a small and effective stream of fluid, such as water.

Although this invention has been described in considerable detail, such description is intended as illustrative rather than limiting, as numerous embodiments will be apparent to those skilled in the art. My invention, therefore, is not to be limited except insofar as is necessitated by the prior art or by the spirit of the appended claims:

I claim:

1. In a syringe adapted to be operated by alternately compressing and releasing an elastic bulb, a casing having a longitudinally extending passageway and a transversely extending passageway communicating with said first named passageway; a stop plug in said transverse passageway located at one side of the longitudinal passageway, said transverse passageway having a valve seat located at the side of said longitudinal passageway opposite said plug; a valve to move freely between the inner end of said plug and said valve seat, a portion of said casing including one end of said longitudinal passageway being shaped to receive the elastic bulb, an exhaust tube having a longitudinal passageway therein whereby the fluid may be discharged, said exhaust tube passageway being in alignment with the longitudinal passageway of the casing, said casing having an offset passageway communicating with said transverse passageway; and an inspiratory tube lying in close proximity to said exhaust tube, said inspiratory tube having a passageway of greater cross-sectional area than said exhaust tube passageway, and communicating with said offset passageway in the casing.

2. A syringe comprising a casing having a longitudinally extending passageway and a transversely extending passageway communicating with said longitudinally extending passageway; a removable stop plug having its inner end extending into the junction of said passageways, a rigid fluid exhaust tube joined to said casing, a rigid fluid inspiratory exhaust tube substantially paralleling said exhaust tube joined to said casing and having a larger cross-sectional area than said exhaust tube passageway, a valve seat in said casing located adjacent the mouth of said inspiratory tube, a valve adapted to move freely between the inner end of said plug and said valve seat, means to draw fluid through both the exhaust and the inspiratory tubes and to discharge the fluid only through the discharge tube, said valve closing the inspiratory tube whereby fluid may not be exhausted therethrough.

3. In a syringe adapted to be operated by alternately compressing and releasing an elastic bulb, a rigid metallic coupling having a plurality of intercommunicating passageways therein, said elastic bulb connected to said coupling and communicating with one of said coupling passageways, a rigid metallic inspiratory tube having a passageway, said inspiratory tube being rigidly connected to said coupling and the passageway of the inspiratory tube communicating with one of the passageways in the coupling, a rigid metallic exhaust tube having a passageway and communicating with another passageway in the coupling, said exhaust tube paralleling the inspiratory tube and also being rigidly connected to said coupling, means to seal said inspiratory tube when said bulb is compressed whereby liquid will only be discharged from said exhaust tube, the exhaust tube having a small external orifice, said inspiratory tube having a large external orifice as compared to the orifice of the inspiratory tube orifice.

4. In a syringe adapted to be operated by alternately compressing and releasing an elastic bulb, a rigid metallic coupling having a plurality of intercommunicating passageways therein, said elastic bulb connected to said coupling and communicating with one of said coupling passageways, a rigid metallic inspiratory tube having a pas-

sageway, said inspiratory tube being rigidly connected to said coupling and the passageway of the inspiratory tube communicating with one of the passageways in the coupling, a rigid metallic exhaust tube having a passageway and communicating with another passageway in the coupling, said exhaust tube paralleling the inspiratory tube and also being rigidly connected to said coupling, a ball check valve to seal said inspiratory tube when said bulb is compressed whereby liquid will only be discharged from said exhaust tube, the exhaust tube having a small external orifice, said inspiratory tube having a large external orifice as compared to the orifice of the inspiratory tube orifice, both said exhaust and said inspiratory tubes being adapted to serve as inlets for the inflow of liquid.

JAMES J. HOLLAND.