March 10, 1970 C. W. RENO ET AL 3,500,063

SCANNING LASER OBSTRUCTION DETECTION SYSTEM
UTILIZING A RETROREFLECTIVE STRIP
Filed June 10, 1968

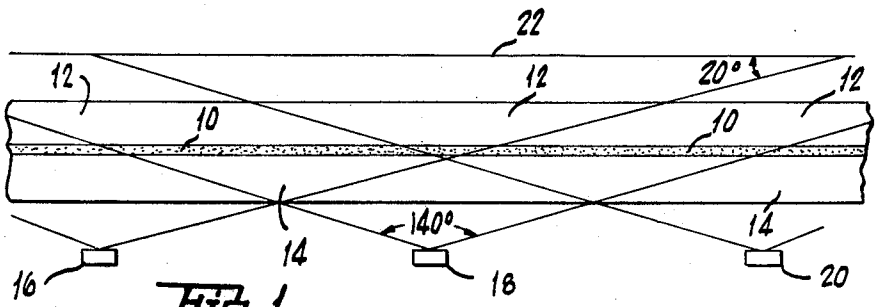

Fig. 1.

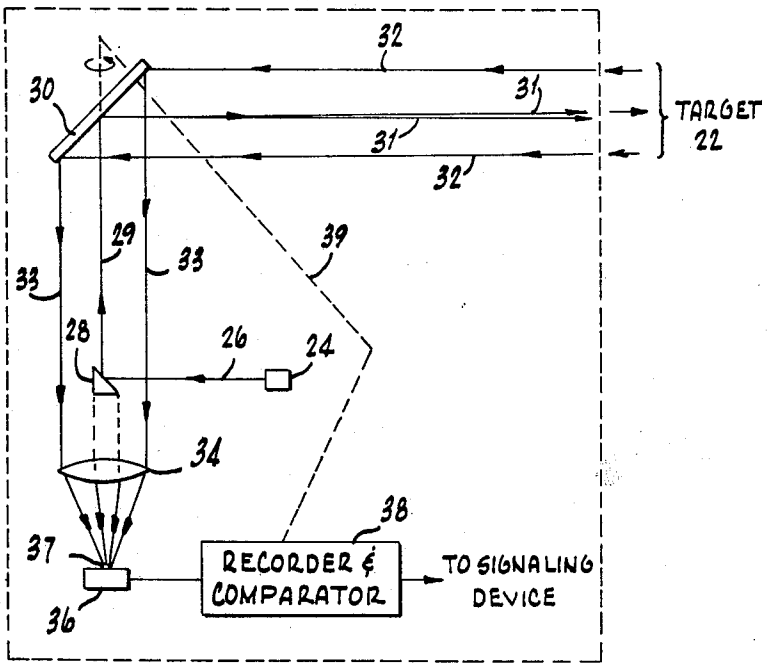

Fig. 2.

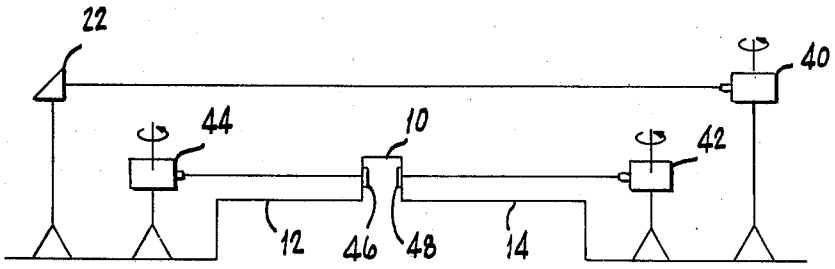

Fig. 3.

INVENTORS
CHARLES WILLIAM RENO &
RICHARD JAMES TARZAISKI
BY Edward J Norton
ATTORNEY

United States Patent Office 3,500,063 Patented Mar. 10, 1970

3,500,063

SCANNING LASER OBSTRUCTION DETECTION SYSTEM UTILIZING A RETROREFLECTIVE STRIP

Charles William Reno, Haddonfield, N.J., and Richard James Tarzaiski, Philadelphia, Pa., assignors to RCA Corporation, a corporation of Delaware

Filed June 10, 1968, Ser. No. 735,756
Int. Cl. G02f 1/28; B64b 1/06
U.S. Cl. 250—217 10 Claims

ABSTRACT OF THE DISCLOSURE

A system for detecting an obstruction in a given area utilizing a laser beam is disclosed. A laser beam is scanned over the area towards a retro-reflective target strip and returned to a receiver located proximately to the transmitter. If an obstruction is detected in the area, a signal is produced giving notice of the obstruction.

This invention relates to a system for detecting an obstruction in an area to be protected, and more particularly, a system utilizing the advantages of a laser beam for detecting obstructions along a railroad track.

Due to the increase in population and urbanization, a high-speed rail transportation system is being developed in which a train will travel upwards of 250 miles per hour. At this speed even a small object along the rail can cause a train wreck resulting in massive injuries and loss of life. Therefore, it is important that together with these trains, some sort of system be developed for detecting obstructions on the right-of-way.

An object of this invention is to provide a system for detecting small obstructions in a protected area.

This system utilizes a laser beam transmitter, retro-reflective means scanned by the laser beam and a laser beam receiver arranged so that the laser beam scans across the protected track area and is returned to the receiver in the event no obstruction is present on the track. When no beam or a beam modified by an obstruction is returned to the receiver, an alarm signal is produced, for example, which activates the necessary controls to stop a train running on the track in sufficient time to avoid the obstruction.

The invention is more particularly defined in the following figures and detailed description wherein:

FIGURE 1 is an overhead view of a railroad track showing the positions of the transmitters along the track for one embodiment of this invention;

FIGURE 2 is a more detailed diagram of the laser transmitting and receiving means which is shown in FIGURE 1; and

FIGURE 3 is a view taken perpendicular to the track showing the placement of the transmitting and receiving and the target means in a second embodiment of this invention.

Referring to FIGURE 1, a monorail track **10** is shown with flat beds **12** and **14** on either side of the track **10**. Laser beam transmitting and receiving apparatus **16**, **18** and **20** are spaced a certain distance apart on the side of bed **14** so that the transmitted beams scan across the beds **12**, **14** and the track **10**. A retro-reflective target strip **22** is positioned on the side of the bed **12**. As understood in the art, a retro-reflective target strip is one whereby a beam of light is transmitted to the strip along a path which is at any angle, within certain limits, with respect to the strip, and returned along the same path to the transmitting means.

In FIGURE 1, the three transmitting and receiving apparatus **16**, **18** and **20** are identical, and each one is designed for scanning an angular area of approximately 140 degrees. This is because the smallest angle between target **22** and the incident path of the beam for which the target **22** will normally return a beam along the incident path is 20 degrees. Each of the apparatus **16**, **18** and **20** are further constructed so that they rotate in effect through an angle of 140 degrees about an axis perpendicular to the beds **12** and **14**, whereby the transmitted and reflected laser beams travel parallel to beds **12** and **14**. Throughout each scan, a laser beam is transmitted from the transmitter part of apparatus **16**, **18** and **20** across the protected area to target **22** and thereupon returned to the receiver part of apparatus **16**, **18** and **20**.

Referring to FIGURE 2 wherein a detailed description of one example of each of the transmitting and receiving apparatus **16**, **18** and **20** is shown, a laser beam transmitter **24** transmits a laser beam along path **26** as shown. A fixed reflector **28** reflects the laser beam along path **29** towards a scanning reflector **30** which in turn reflects the beam along path **31** towards target **22**. As the beam travels along path **31** to and from target **22**, it expands slightly due, for instance, to dust in the air or inaccuracies in target **22**. By the time the laser beam hits target **22**, it is somewhat larger than it was at the time it left transmitter **24**. The beam is reflected from target **22** back along the same path and by the time the beam reaches the scanning reflector **30**, it is much larger than it was when the beam was reflected from reflector **30** towards target **22**. In FIGURE 2 the return beam path is shown as being between lines **32**, **32**. When the return beam hits reflector **30**, it is reflected back along path **33**, the center of which is parallel to path **29**. A focusing lens **34** is positioned so that path **33** intersects it. However, fixed reflector **28** is also intersected by path **33** before it reaches lens **34**. When reflector **28** is made much smaller than path **33**, as shown in FIGURE 2, much of the laser beam in path **33** still intersects lens **34**.

Laser beam receiving and translating apparatus **36** is positioned at the focal point of lens **34** so that the portion of the beam intersecting lens **34** is applied to a receiver opening **37** in the apparatus **36**. Apparatus **36** translates the laser beam into an electrical signal by any known suitable optical detecting means, not shown, and a record is made in the recorder and comparator **38** of this signal for each scan. On each successive scan, the received signal is compared with the previously received signal, and if there is any deviation between the two, a signal is transmitted, for example causing a train traveling over the track **10** to be stopped while notifying maintenance personnel of the obstruction. A mechanical linkage represented by dashed line **39** or other suitable coupling means is provided to synchronize the operation of the recording and comparing means **38** with the scanning cycle of the scanning reflector **30** to provide for the proper comparison of the received signals from the receiver **36** on a scan-by-scan basis. Moreover, recorder and comparator **38** can be programmed so that if the train is the obstruction causing the deviation, no signal for stopping the train is transmitted. Such a program might provide that no signal is transmitted if the obstruction goes away. At the same time, a separate signal could be transmitted notifying the rail terminal of the exact location of the train at all times, and hence provide a track signal control system as well as obstruction detection.

In FIGURE 3, a system is shown in which protection is given to each of the flat beds **12** and **14**, as well as over the rail **10**. Three transmitting and receiving apparatus **40**, **42** and **44** are used to scan a designated area. Apparatus **40** and the reflector **22** operate as described above in connection with FIGURE 1. Apparatus **42** and **44** operate in the same manner over an identical angular area but only cover the area of a respective flat bed. Retro-

reflective target means **46** and **48** are positioned along each vertical side of track **10**, and operate in the manner of the retro-reflective target **22** to return the scanning laser beams to the respective apparatus **42**, **44**.

What is claimed is:

1. In combination,

means for generating a laser beam,

a fixed reflector for reflecting said beam along a given path,

a rotating scanning reflector positioned in said path for reflecting said beam received from said fixed reflector,

said scanning reflector having a reflective area larger than the dimensions of said fixed reflector perpendicular to said path so that upon the scanned laser beam returning to said scanning reflector from a reflective object with the returned beam having a cross-sectional area larger than that of the beam reflected towards said object, the returned laser beam is reflected back along said path with a cross-sectional area larger than said dimensions of said fixed reflector, and

a laser beam receiving means positioned to receive that portion of said returned laser beam reflected along said path by said scanning reflector which is unobstructed by said fixed reflector.

2. The invention according to claim **1** wherein said reflective object is a retro-reflective target.

3. The invention according to claim **1** wherein said laser beam receiving means further includes means for translating said returned laser beam, during each scan into a signal dependent upon said returned laser beam, means for comparing said translated signal with a predetermined signal and for providing a further signal when there is a difference between said translated signal and said predetermined signal.

4. The invention according to claim **3** wherein said predetermined signal corresponds to a translated signal from a previous scan of said scanning reflector means, and wherein the frequency and phase of said scans are identical.

5. A scanning laser beam obstruction detection system for detecting the presence of an obstruction in an area to be protected, said system comprising,

a fixed reflector,

a scanning reflector means,

a laser beam transmitting means for transmitting a laser beam which expands in cross-sectional area and which is reflected by said fixed reflector along a given path, the dimensions of said fixed reflector perpendicular to said path being smaller than the dimensions of the reflective area of said scanning reflector perpendicular to said path,

said fixed reflector and scanning reflector means being so positioned that said laser beam reflected from said fixed reflector is applied along an unobstructed path to said scanning reflector means and reflected thereby along a scanned path over said area,

reflective target means which intersects said scanned path and which operates to return said laser beam received from said scanning reflector means back along said scanned path towards said scanning reflector means so that said returned laser beam is reflected by said scanning reflector means back along said first mentioned path, and

laser beam receiving means positioned to receive that portion of said returned laser beam not obstructed by said fixed reflector which is applied from said reflective target to said scanning reflector means and reflected thereby along said first mentioned path.

6. The invention according to claim **5** wherein said scanning reflector means includes means for rotating said scanning reflector means about an axis located substantially at the center of said given path.

7. The invention according to claim **5** wherein said reflective target means is a retro-reflective target strip.

8. The invention according to claim **5** wherein said laser beam receiving means further includes means for translating said returned laser beam into a signal dependent upon said returned laser beam, means for comparing said translated signal with a predetermined signal and for providing a further signal when there is a difference between said translated signal and said predetermined signal.

9. The invention according to claim **5** wherein said predetermined signal corresponds to a translated signal from a previous scan of said scanning reflector means and wherein the frequency and phase of said scans are identical.

10. The invention according to claim **9** in which said previous scan is the immediately preceding scan of said reflective scanning means.

References Cited

UNITED STATES PATENTS

2,769,374	11/1956	Sick	250—221
3,360,654	12/1967	Müller	250—221

RALPH G. NILSON, Primary Examiner

T. N. GRIGSBY, Assistant Examiner

U.S. Cl. X.R.

246—29; 250—222, 223

Disclaimer

3,500,063.—*Charles William Renon*, Haddonfield, N.J. and *Richard James Tarzaiski*, Philadelphia, Pa. SCANNING LASER OBSTRUCTION DETECTION SYSTEM UTILIZING RETROREFLECTIVE STRIP. Patent Mar. 10, 1970. Disclaimer filed Aug. 8, 1977, by the assignee, *RCA Corporation.*

Hereby enters this disclaimer to the remaining term of said patent.

[*Official Gazette October 4, 1977.*]