Nov. 27, 1934. J. A. SPENCER 1,982,077

SOCKET

Original Filed Dec. 24, 1928

Fig. 1.

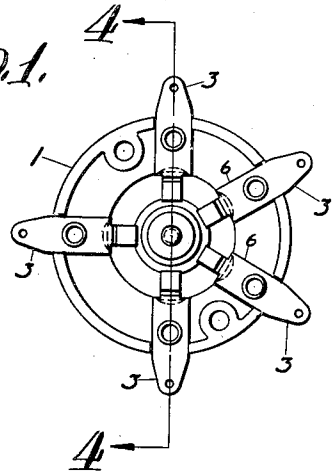

Fig. 2.

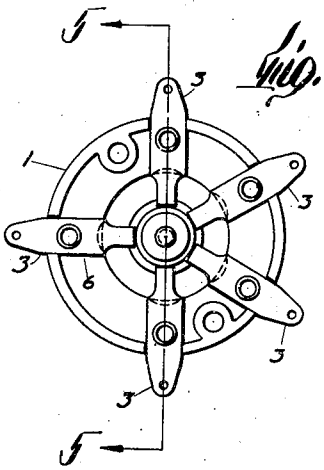

Fig. 3.

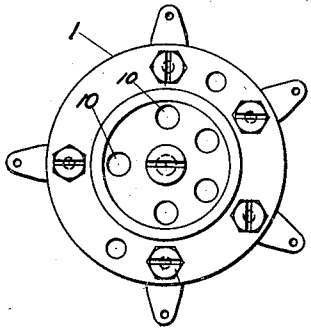

Fig. 4.

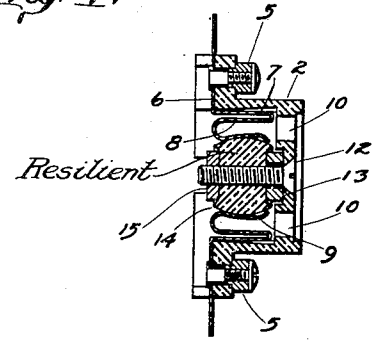

Fig. 5.

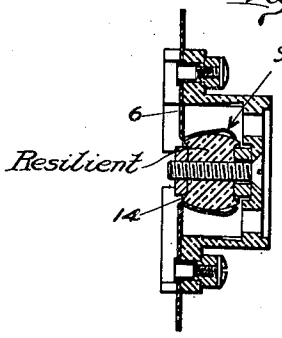

Inventor
John A. Spencer
by R. Lee Wilson
Atty

Patented Nov. 27, 1934

1,982,077

UNITED STATES PATENT OFFICE

1,982,077

SOCKET

John A. Spencer, Newton, Mass., assignor to Raytheon Production Corporation, Newton, Mass., a corporation of Delaware

Application December 24, 1928, Serial No. 328,124
Renewed December 3, 1931

10 Claims. (Cl. 173—328)

This invention relates to sockets and especially to the type into which plug members having pins or prongs are inserted in order to make a quickly detachable electrical connection. Although my invention is applicable to all kinds of make and break devices, I have shown it in connection with a socket for vacuum tube bases.

The ordinary socket, as a rule, relies upon the spring of metal contacts to press against the pins of the tube bases in order to make firm contact. While this may be satisfactory when the sockets are new, it has been found that the repeated inserting and pulling out of the tube bases from the socket loosens up the contacts so much that the spring members very lightly touch the pins or often fail to touch them at all. Where copper, brass, or ordinary metal is used, even a light contact is worthless because of dirt or a film of oxide. It is desirable that the spring contacts be tightly pressed against the pins so that firm contact is made therewith. Furthermore, it is desirable that the firmness of the contact be substantially unimpaired by repeated making and breaking of the connections.

An object of my invention is to accomplish the above. A further object is to accomplish the above by simple and cheap means. An additional object is to make the spring contacts of a base adjustable by simple means to vary the contact pressure.

Referring to the drawing, Figure 1 is a bottom plan view of a socket.

Figure 2 is a similar view of a modification.

Figure 3 is a top plan view of both of the sockets of Figures 1 and 2.

Figures 4 and 5 are sections on lines 4—4 and 5—5 respectively.

The socket comprises the customary insulating base 1 having an upstanding cylindrical portion 2. Disposed around the base members are metallic members 3. These metallic members are suitably molded into the base portion and may have outwardly extending portions 3 to which connections may be soldered. Molded in the base portion of the socket and connected with said metallic members are screw and nut members 5. In lieu of soldering wires to members 3, connection may be made to these screw and nut members. Metal members 3 have inwardly extending portions 6. These inwardly extending portions comprise two portions 7 and 8 bent around so as to be parallel and closely adjacent each other and another portion 9 looped around from portion 8. The top of the socket has holes 10 through which the pins of a vacuum tube base may be projected to engage portions 8 and 9 of metal members 3.

Prior to my invention, it had been customary to rely upon the spring of metal members 3, especially at the curves connecting portions 7 and 8, and 8 and 9 to keep them in firm engagement with the pins of the vacuum tube base. As has been stated previously, however, these spring members gradually loosened up so that poor or no connection resulted.

In order to maintain firm contact at the metallic members, I have provided the center of the socket with a screw 12. The head of this screw is flush with the top of portion 2 of the socket member and will, therefore, not interfere with the disposition of the vacuum tube base. A spacer member 13 of any suitable material, either metal or insulation, is disposed around screw 12 and below the surface of the top of portion 2. If desired this may be omitted or may be integral with portion 2. A rubber member 14 is then placed around the screw and finally a nut 15 is placed on the other side of the rubber member. This rubber member may conveniently be a small length of heavy rubber tubing.

It is evident that by screwing up nut 15 toward the head of the screw that rubber member 14 will be compressed. This will result in the formation of a bulge. Rubber member 14 thus bulged out engages portions 9 of the metal members 3 and forms a resilient backing therefor. When the pins of a vacuum tube base are pressed in, and tend to separate portions 8 and 9, it is evident that rubber member 14 will be compressed and exert a constant pressure on portions 9 of members 3. In this way, in addition to the resilience of the metal, the rubber will tend to press the portions 9 into firm engagement with the pins of the vacuum tube base.

It is possible to adjust the pressure by screwing up nut 15. This may be done from the top of the socket by a screw driver engaging the head of the screw. Hence, if after a certain amount of use, the metal fails to make satisfactory contact with the pins of the tube bases, it is possible to easily adjust the spring members so that satisfactory contact will be made.

In Figures 2 and 5, I have shown a modification wherein the inward portions 6 of metal members 3 have only one spring portion 9'. This spring portion is engaged by rubber member 14 and is pressed outwardly so that the pins of the vacuum tube base will firmly contact therewith. It is evident that the contact mak-

ing members of the modification of Figures 2 and 5 are cheaper and simpler than the members of Figures 1 and 4. However, any type of contact making member may be advantageously used in such a socket.

Thus it will be seen that I have devised a socket which is simple, cheap, and effective. While I have illustrated it for use in connection with vacuum tube bases, it is evident that my invention is not limited to this. The contact making members may be disposed in any manner and in any number. Instead of a vacuum tube base, anything having pins or prongs for engagement with spring members may be used. Where the contact members are circularly disposed with respect to the center of the socket, my invention has the advantage that all the spring members are outwardly pressed with substantially equal force and that there need be but a single member for pressing a plurality of contact making members.

I claim:

1. A vacuum tube socket comprising an insulating base, spring members mounted on said base and adapted to contact with prongs of a vacuum tube base, common means for maintaining said spring members in predetermined position and for extending a lateral pressure on the pins of a vacuum tube base upon the insertion thereof into said socket and means for adjusting said common means from the top of said socket for changing said pressure.

2. A socket into which a vacuum tube base is adapted to be plugged, comprising an insulating base, spring members mounted in said base and adapted to contact with the prongs of a vacuum tube base, a screw centrally disposed with respect to said socket and a common circular member mounted on said screw engaging said members and exerting a resilient adjustable lateral pressure on the prongs of a vacuum tube base in order to maintain good contact.

3. A vacuum tube socket comprising an insulating base, spring contacts mounted in said base and adapted to contact with the prongs of a vacuum tube base, a screw centrally disposed with respect to said socket, a rubber member mounted on said screw and means for causing said rubber member to bulge outwardly and engage said spring members whereby good contact is maintained when said vacuum tube is plugged in.

4. A vacuum tube socket comprising an insulating base, spring members mounted in said base and adapted to make contact with the prongs of a vacuum tube base, a screw member symmetrically disposed with respect to the contact making portions of said spring members, a rubber cylindrical member disposed over said screw member and a nut on said screw, adapted to compress the rubber to cause it to bulge outwardly and engage said spring members whereby good contact is maintained when said base is plugged in.

5. A socket for vacuum tube bases and the like, comprising an insulating base, spring contacts mounted thereon, a common resilient means for maintaining the said contacts against prongs carried by the said vacuum tube base, the resilient means being adapted to constantly maintain an adjustable predetermined pressure against the said contacts, and means carried by the socket for adjustably expanding and contracting the said resilient means.

6. A socket, comprising an insulating base, spring members adapted to make contact with the prongs of a plug, a common resilient means symmetrically located with respect to the said spring members for maintaining them against the said prongs when making contact, the said resilient means being adapted to constantly maintain an adjustable predetermined pressure against the said members, and means carried by the socket for adjustably expanding and contracting the said resilient means.

7. A socket for vacuum tube bases and the like, comprising an insulating base, a plurality of spring members mounted in the said base and symmetrically located with respect to the center of the said base, the said spring members being adapted to contact with prongs of a vacuum tube base, and means centrally located within the confines of the said spring members for adjustably pressing the said spring members to maintain them in constant firm contact with prongs of a vacuum tube base.

8. A socket into which a vacuum tube base is adapted to be plugged, comprising an insulating member, spring members mounted thereon, means comprising a circular member adapted to simultaneously engage the said spring members and to press them against the prongs of a vacuum tube base, and means carried by the socket adapting the said circular member to exert adjustable predetermined pressure upon the said spring members.

9. A socket into which conductors are adapted to be plugged, comprising a base, contacts mounted therein, common means adapted to simultaneously engage said contacts and to press them against said conductors, and means carried by the socket for adjusting the first-named means to exert an adjustable pressure against the said contacts.

10. A socket comprising a base, a plurality of contacts adapted to contact with conductors inserted into said socket, common means for maintaining all of said contacts in a predetermined position, and extending a lateral pressure on said conductors, and means for adjusting said common means whereby the pressure of said contacts may be adjusted.

JOHN A. SPENCER.