S. KLEIN & J. LUTTMANN.

TRUNK LOCK.

APPLICATION FILED DEC. 15, 1915.

1,214,687. Patented Feb. 6, 1917.

Fig. I

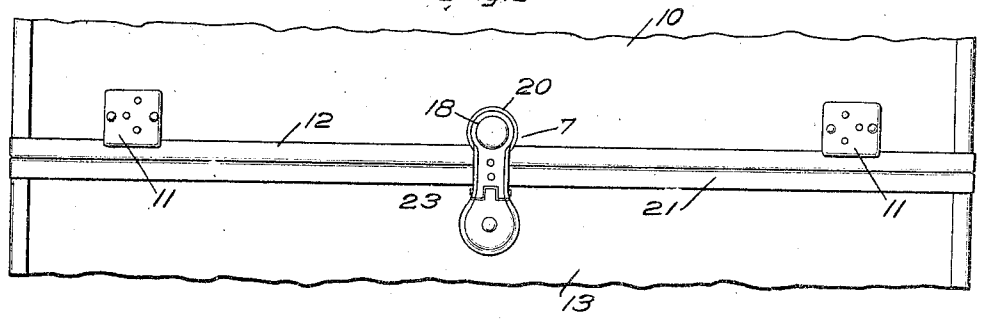


Fig. 2.

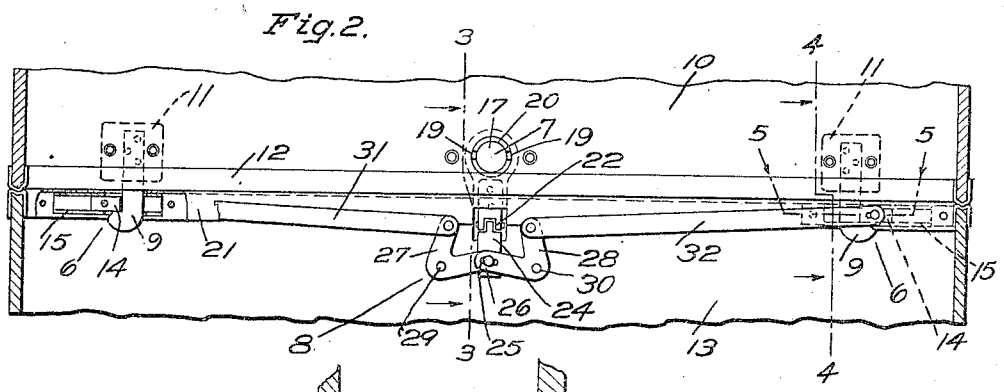


Fig. 3.

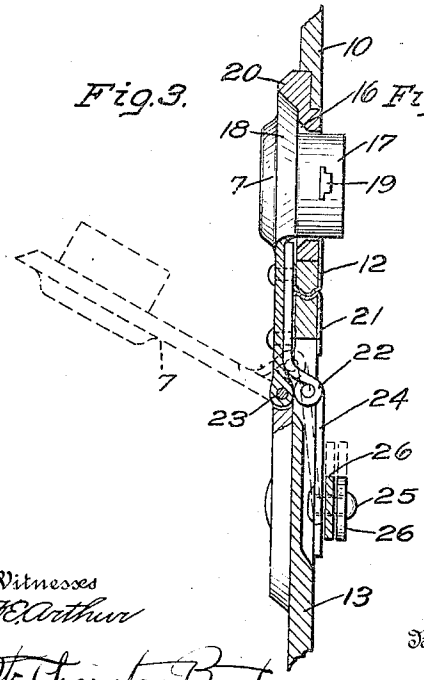


Fig. 4.

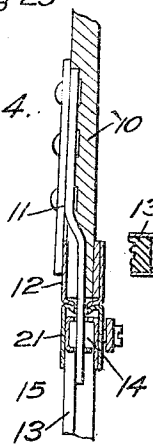


Fig. 5.

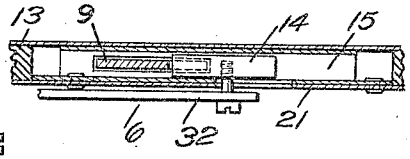


Witnesses

E. E. Arthur

W. Thornton Bogert

Inventors

Stanley Klein

Joseph Luttmann

By Walter B. Murray

Attorney

# UNITED STATES PATENT OFFICE.

STANLEY KLEIN AND JOSEPH LUTTMANN, OF CINCINNATI, OHIO, ASSIGNORS TO THE MENDEL-DRUCKER COMPANY, OF NORWOOD, OHIO, A CORPORATION OF OHIO.

## TRUNK-LOCK.

1,214,687. Specification of Letters Patent. Patented Feb. 6, 1917.

Application filed December 15, 1915. Serial No. 67,077.

*To all whom it may concern:*

Be it known that we, STANLEY KLEIN and JOSEPH LUTTMANN, citizens of the United States of America, and residents of Cincinnati, county of Hamilton, State of Ohio, have invented certain new and useful Improvements in Trunk-Locks, of which the following is a specification.

This invention relates to improvements in trunk locks and particularly to that class of trunk locks which are divided into a series of coöperating devices located at intervals along the abutting edges of the body and lid of the trunk with suitable means for simultaneously operating and locking all of the devices.

An object of my invention is to produce a trunk lock which will not place a strain upon the hinges or other portions of the trunk when the lock is operated.

A further object is to produce a trunk lock in which the operative parts will not become entangled with the garments within the trunk.

Figure 1 is a fragmental front elevation of the trunk lock embodying our invention. Fig. 2 is a sectional interior view of the trunk looking toward the inner wall. Fig. 3 is a sectional view taken on the line 3—3 of Fig. 2. Fig. 4 is a sectional view taken on the line 4—4 of Fig. 2. Fig. 5 is a sectional view taken on the line 5—5 of Fig. 2.

The trunk lock embodying our invention comprises a locking device 6 located adjacent to each end of the abutting edges of the front sides of the body and lid of the trunk, a hasp 7 centrally located on and adapted to unite the front abutting edges of the body and lid, a means 8 for operatively connecting the hasp and the device, whereby the hasp may simultaneously cause the devices to lock the abutting edges together adjacent to the ends at the time it is operated to lock the edges together at the center of the sides.

Each of the locking devices consists of a hook 9 secured to the edge of the lid of the trunk and depending therefrom in a position centrally of the thickness of the front 10. A reinforcing plate 11 is preferably provided to which the hook is secured by rivets, the plate in turn being secured to the front 10 and overlapping a metal valance 12 extending around the edge of the lid. In the upper edge of the front 13 of the body of the trunk a reciprocally mounted bolt 14 is provided for the purpose of engaging the hook 9 and of preventing its disengagement and consequently the disengagement of the lid from the body portion when the bolt is brought to the position shown in Fig. 2. The bolt is reciprocally mounted in a sheet metal frame 15 forming ways in which the bolt may move, and which is sunk into a recess formed in the edge of the front 13 of the body of the trunk. A metal valance similar to the metal valance of the lid, is provided around the edge of the trunk the abutting edges of the valance being preferably constructed to form substantially a tongue and groove which in a measure prevents relative sidewise movement of the body and lid in their closed positions. The body valance 21 is provided with a slot with which the hook may register in order to pass therethrough and into position to be engaged by the bolt 14, as shown in Fig. 2. This locking device construction is duplicated adjacent to each end of the front sides of the body and lid and preferably at equal distances from the hasp 7, the hooks being however arranged to extend away from one another with the bolts arranged to be moved toward one another in locking the body and lid together.

The hasp which is provided for operating the locking devices is located centrally of the front sides of the body and lid, it being pivotally attached to the body adjacent to and centrally of the upper edge of the front 13. The hasp is arranged however, to engage a socket 16 formed in a plate 20 secured to the front of the lid, the socket having the necessary shape to receive the usual lock cylinder 17 and beveled escutcheon plate 18 of the hasp. This hasp is of the usual construction, the lock cylinder 17 being provided with the lock bolts 19 which are projected beyond the inner wall of the plate 20 provided for receiving the cylinder 17 and escutcheon plate 18. This hasp is provided with a journal loop 22 spaced from the pivotal point 23 of the hasp and extending toward the interior of the trunk, the journal loop being attached to a pivotally mounted depending plate 24 in the lower end of which a pin 25 is secured. This pin engages the slotted ends 26 of two bell cranks 27 and 28 pivotally mounted at points 29 and 30 on the inner side of the

front wall of the trunk body, the cranks being oppositely positioned so that they may operate in opposition to one another. Thus when the hasp 7 is moved to the position indicated in dotted lines in Fig. 3, the ends 26 will be raised and the ends 27 and 28 will be moved apart. In order to communicate this motion of the ends 27 and 28 to the bolts 14 of the locking devices 6, rods 31 and 32 are provided, the rods being connected at one end with the respective ends 27 and 28 of the bell cranks, and at their opposite ends with the bolts 14 of the locking device 6. Thus when the hasp is swung to the dotted line position shown in Fig. 3, the bolts will be moved along the slides 15 away from the hooked ends of the hooks 9. In this position the lid is freed from the body portion at each of the points 6 and 7. The bolts are moved into engagement with the hooked ends of the hooks 9, as shown in Fig. 2 and as sectionally shown in Fig. 5.

With our improved trunk lock construction we are enabled to simultaneously lock the lid to the body of the trunk at several points without placing upon the body of the lid undue strains which operate to cause opposite movement of the body and lid and which therefore place strains upon the hinges and other portions which are not designed for such strains. In addition to this the opposite locking movement of the locking device renders it impossible to unlock the trunk by merely springing the lid to one side or the other of the body. Furthermore, in the trunk lock construction embodying our invention there are no projecting portions which normally extend to the interior of the trunk, or which will be projected into the interior of the trunk at the time of operation of the lock. This is a desirable feature since it eliminates the danger of having the contents of the trunk injured by the projecting portions being forced against them either in the locking or unlocking operations. This elimination of projecting portions of the mechanism of the lock, has the advantage that it prevents the jamming of the operative portions of the trunk lock by articles in the trunk coming into engagement therewith when the trunk is being moved about.

Having thus described our invention, what we claim is:

1. In combination in a trunk lock for trunks having relatively movable members, a hasp pivotally secured to the front and adjacent to the edge of one of the members, means mounted on the coöperating edge of the coöperating member adapted to be engaged by the hasp whereby the hasp may be moved into locking engagement therewith, locking devices located adjacent to the ends of the trunk, each of said locking devices consisting of a hook secured to the edge of the member provided with the hasp receiving means, a reciprocally mounted bolt located in the member to which the hasp is pivotally attached, and mechanism for operatively connecting the hasp and the locking devices, said mechanism consisting of levers pivotally mounted upon the front of the member to which the bolts and hasp are attached and adapted to operate in a plane parallel thereto, and links connecting the hasp, the levers and the bolts, adapted to move the bolts in opposite directions when the hasp is moved to its locking or unlocking positions.

2. In a locking device for trunks having coöperating members, a hasp pivotally mounted centrally of and adjacent to the edge of the front of one of the members, a locking device located adjacent to each end of the members, each of said locking devices being so located as to operate in opposition to one another and comprising a bolt secured to the edge of one of the members, and a hook located between the hasp and the bolt of each of said locking devices, each bolt being adapted to be moved into locking engagement with its coöperating hook when the edges of the members are brought into abutting engagement, and means operatively connecting the hasp with the bolts and adapted to move the bolts toward the hasp and into locking engagement with the hooks when the hasp is moved to its locking position.

3. In combination in a trunk lock a longitudinal pivot secured near the edge of one of the members of the trunk, a hasp mounted upon the pivot and adapted to swing thereon toward and away from the face of the member, reciprocating bolts mounted at opposite ends of the trunk member, a pair of pivotally mounted levers secured adjacent to the hasp, reciprocating links connecting the bolts, the levers and the hasp, and hooks secured to the coöperating trunk member located between the bolts and the hasp, adapted to be engaged by the bolts when the hasp is moved to its locking position.

In testimony whereof, we have hereunto subscribed our names this 13th day of December, 1915.

STANLEY KLEIN.
JOSEPH LUTTMANN

Witnesses:
WALTER F. MURRAY,
W. THORNTON BOGERT.