US00D583660S

(12) United States Design Patent

Steiger et al.

(10) Patent No.: US D583,660 S
(45) Date of Patent: ** Dec. 30, 2008

(54) **BOX**

(75) Inventors: **Dennis Irwin Steiger**, New Milford, CT (US); **Claudia Bugni**, Vinhedo SP (BR); **Bernd Jansing**, Buxtehude (DE); **Richard William Seymour**, Gwent Wales (GB); **Adrian Barclay Caroen**, Sussex (GB); **Ian Peter Whatley**, London (GB)

(73) Assignee: **Conopco, Inc.**, Englewood Cliffs, NJ (US)

(**) Term: **14 Years**

(21) Appl. No.: **29/269,585**

(22) Filed: **Dec. 4, 2006**

(51) **LOC (8) Cl.** **09-03**
(52) **U.S. Cl.** **D9/432**
(58) **Field of Classification Search** D9/430–433, D9/414–418, 420–429, 560, 737, 756, 631, D9/636, 640, 642; D3/273, 302, 304, 305, D3/307, 309–312, 314, 317, 318, 901, 905; 206/421, 454, 457, 775–778, 784, 822; 220/500, 220/523–529, 552, 555; 229/100, 103.3, 229/104–106, 108, 108.1, 109, 110, 111, 229/112, 117.09, 117.12, 117.15, 120, 125.015, 229/160.1, 162.1, 182.1, 215, 247, 406, 407, 229/902, 920, 922, 930, 942; D2/731, 748; D6/396, 407, 629, 633
See application file for complete search history.

(56) **References Cited**

U.S. PATENT DOCUMENTS

485,790	A *	11/1892	Ettlinger	229/116.1
1,667,975	A *	5/1928	Labombarde	229/152
2,447,563	A *	8/1948	Buttery	229/149
2,844,297	A *	7/1958	Holmes	229/228
2,887,389	A *	5/1959	Linville	426/124
3,235,167	A *	2/1966	Svensson	229/228
3,362,527	A *	1/1968	Watson	206/45.29
D234,339	S *	2/1975	Shiffman	D9/420
D244,994	S *	7/1977	Flanagan	D9/423
4,141,449	A *	2/1979	Stone	229/223
4,191,323	A *	3/1980	Webinger	229/116.1
D270,812	S *	10/1983	Fontlladosa	D9/607
D297,415	S *	8/1988	Gavin et al.	D9/416
D336,428	S *	6/1993	Buratto	D9/432
D345,101	S *	3/1994	Abrams	D9/423
D365,023	S *	12/1995	Abrams et al.	D9/423
D376,759	S *	12/1996	Bradfield	D9/432
D395,600	S *	6/1998	Borghorst et al.	D9/432
D444,381	S *	7/2001	Barr	D9/416
D454,494	S *	3/2002	Bryan et al.	D9/430
D454,495	S *	3/2002	Bryan et al.	D9/433
D460,689	S *	7/2002	Robinson	D9/416
D484,046	S *	12/2003	Kopecky	D9/432
D494,863	S *	8/2004	Hamuro et al.	D9/432
D549,096	S *	8/2007	Ayats et al.	D9/430
D561,023	S *	2/2008	Jacxsens	D9/431

* cited by examiner

Primary Examiner—T. Chase Nelson
Assistant Examiner—Karen Acker
(74) *Attorney, Agent, or Firm*—Alan A. Bornstein

(57) **CLAIM**

The ornamental design for a box, as shown and described.

DESCRIPTION

FIG. **1** is a front perspective view of a box showing our new design;

FIG. **2** is a front elevational view thereof;

FIG. **3** is a back elevational view thereof;

FIG. **4** is a right side elevational view thereof;

FIG. **5** is a left side elevational view thereof;

FIG. **6** is a top plan view thereof; and,

FIG. **7** is a bottom plan view thereof.

The broken line represents portions of a box that form no part of the claimed design.

1 Claim, 3 Drawing Sheets

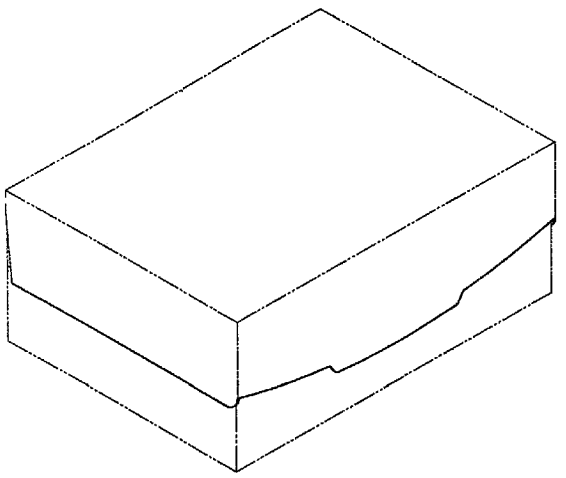

FIG. 1

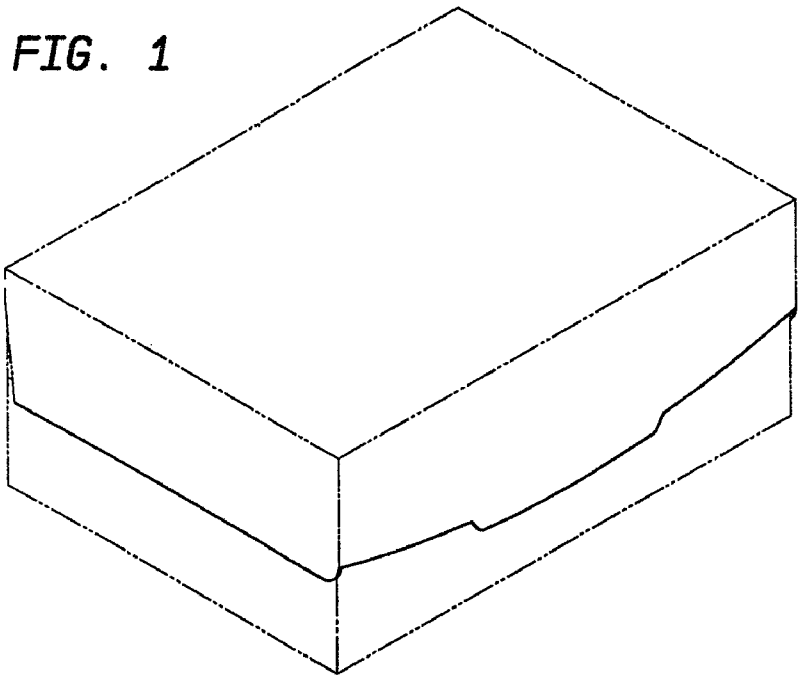

FIG. 2

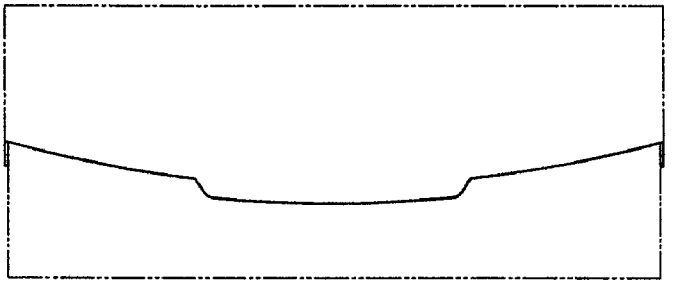

FIG. 3



FIG. 4



FIG. 5



FIG. 6

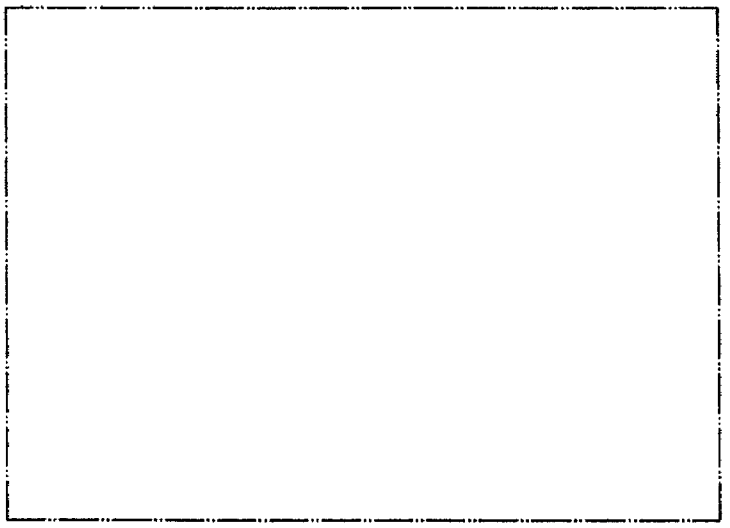

FIG. 7

