2 Sheets--Sheet 1.

HUGH HAMILL.

Improvement in Pressing, Ironing, and Smoothing Machines.

No. 115,604. Patented June 6, 1871.

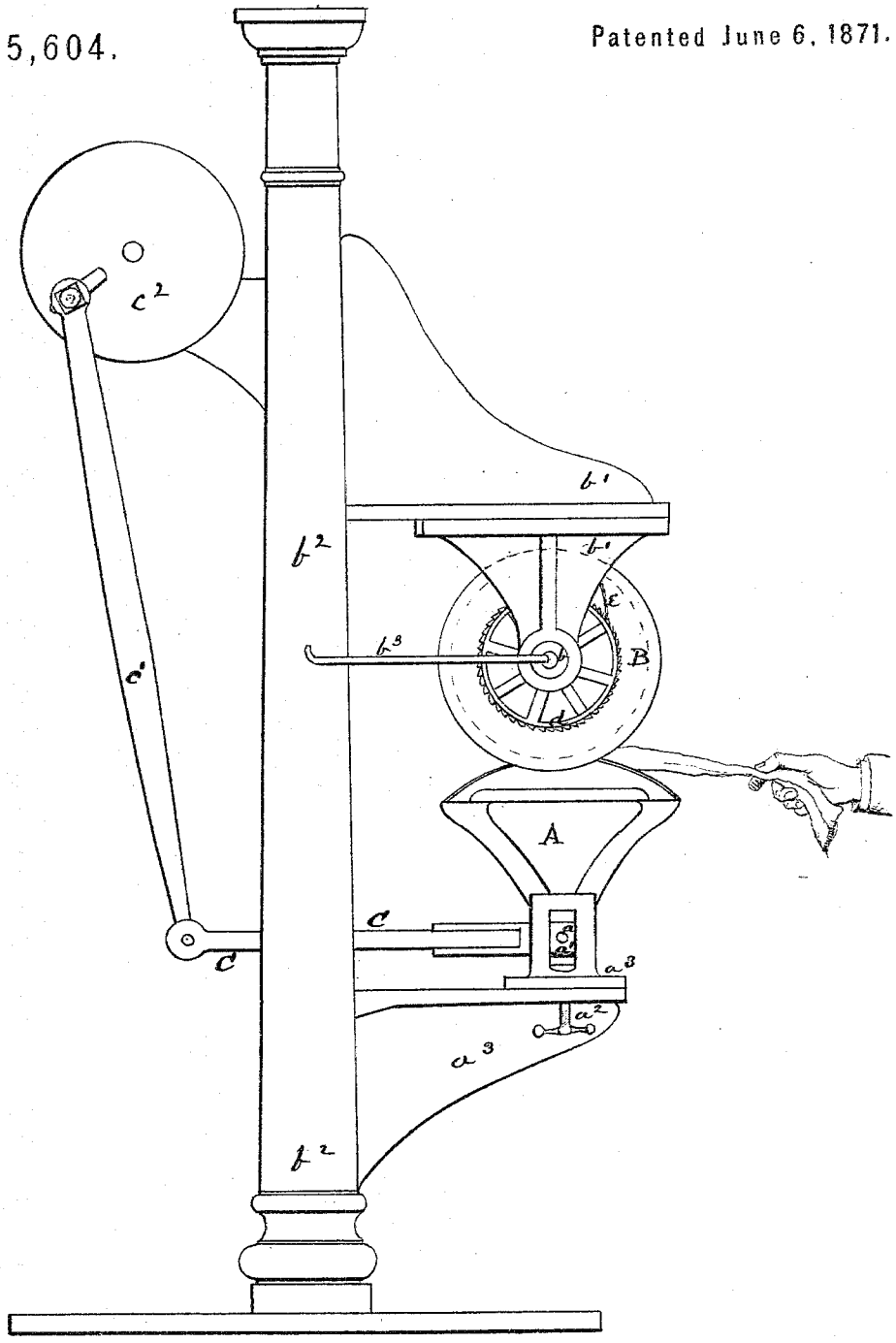

Fig. 1.

Witnesses
Geo. W. Fox
Thos. P. Ohio Jr.

Inventor
Hugh Hamill
by J. B. Staples
his atty

AM. PHOTO-LITHOGRAPHIC CO. N.Y. (OSBORNE'S PROCESS)

2 Sheets--Sheet 2.

HUGH HAMILL.

Improvement in Pressing, Ironing, and Smoothing Machines.

No. 115,604.

Patented June 6, 1871.

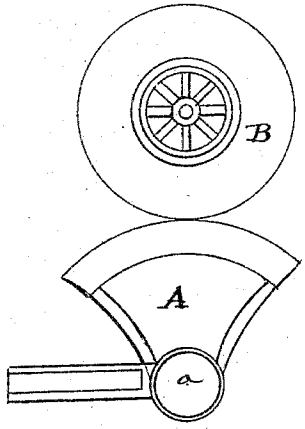

Fig. 3.

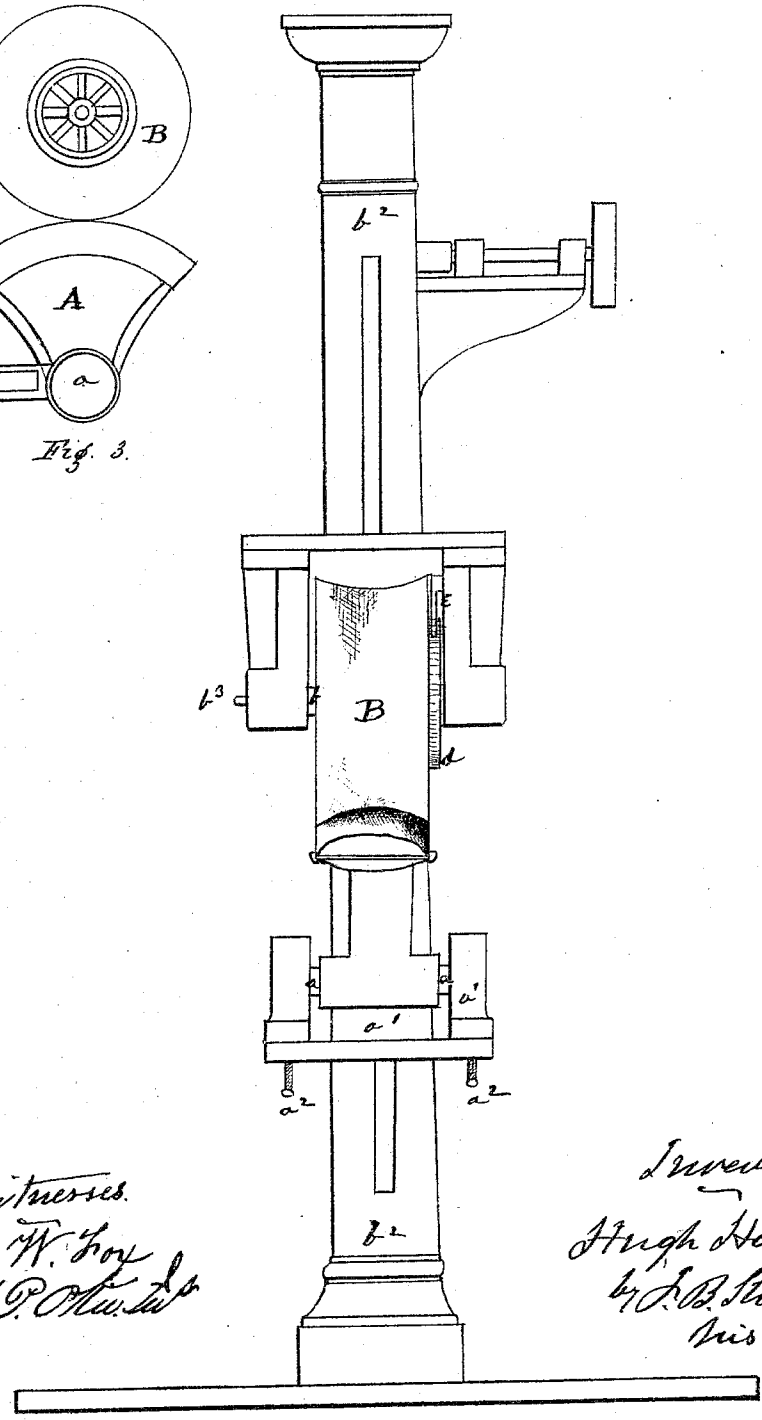

Fig. 2.

Witnesses.
Geo. W. Fox
Thos. P. Okw. Jr.

Inventor
Hugh Hamill
by J. B. Staples
his Atty.

AM. PHOTO-LITHOGRAPHIC CO. N.Y. (OSBORNE'S PROCESS.)

UNITED STATES PATENT OFFICE.

HUGH HAMILL, OF NEW YORK, N. Y.

IMPROVEMENT IN PRESSING, IRONING, AND SMOOTHING MACHINES.

Specification forming part of Letters Patent No. 115,604, dated June 6, 1871.

I, HUGH HAMILL, of the city and county and State of New York, have invented a new and useful Pressing, Ironing, and Smoothing Machine, of which the following is a specification:

The object of my invention is to perform by machinery the operation of pressing, ironing, and smoothing or fluting cloths and all such textile fabrics or articles of manufacture as require such a process, either before being made into wearing apparel or after so made, and to combine and unite the process of pressing, ironing, and smoothing in one machine, so as to save the time and expense of ironing by hand and of pressing and ironing or smoothing, &c., by different and successive operations upon the cloth; and the nature of my invention consists in so arranging and combining a table or rocker with a wheel or ironing-drum, suitably heated, that when the fabric to be pressed and ironed is placed between them the operation of the two shall draw the fabric between their exterior surfaces, under suitable pressure, and, by a reverse movement rapidly following, shall discharge the cloth fabric, and, in so doing, effectually perform the operation of ironing and smoothing.

In the accompanying drawing, Figure I represents a side elevation of my machine and of the pulley and connecting-rod for operating the same. Fig. II represents a front elevation of the same.

A is the ironing-table or rocker, having a shaft, *a*, upon which it vibrates or rocks, and which shaft is supported at each end upon sliding adjustable journal-boxes a^1, and which have underneath them a pressure-spring, and which can also be adjusted by means of the two hand-screws a^2. The sliding boxes work in and are supported by the pillar-block or bracket a^3. B is the ironing wheel or drum, having its journals *b* supported by suitable bearings in the brackets b^1, which are secured to the upright standard or beam b^2. The wheel B is hollow and open at the sides. Its journals are made hollow or tubular, into which is inserted a gas-pipe, b^3, the jet of which, when the gas is lighted, directs the flame upon the interior periphery for pressing, ironing, &c.; or it may be heated by steam. The upper operating surface of the ironing-table or rocker A and the exterior face of the periphery of the ironing-wheel B are adapted to each other, so that the cloth between will be equally acted upon between the two surfaces; and as the ironing-wheel B is to be operated by the ironing-table or rocker A underneath it, the curves of the two wheels must so correspond as to work on any part of the operating surface; and the table or rocker is made to press constantly and uniformly against the face of the ironing-wheel by means of the spring and adjusting-screws a^2, before described. C is an arm, attached at one end to the rocking table A, and at the other is hinged to the connecting-rod c^1, which is attached at its opposite end to a pulley, c^2, eccentrically, or to a crank. The revolution of the pulley or crank causes the rocking table A to vibrate back and forth to the extent required. The upper surface of A being made to press upon the periphery of the ironing-roller B, will, when the cloth to be ironed is placed between the two, draw the cloth within and between them, when the rocking movement is inwardly; and will also cause the ironing-wheel to rotate in a corresponding manner to the extent of the inward movement of the rocking-table surface in contact with it or the cloth. As soon as the rocking table commences its reverse movement the cloth ceases to be drawn in, and is forced or drawn out by the reverse movement of the rocker. The ironing-wheel B is caused to remain stationary during this reverse movement of the rocking table by the ratchet-wheel *d* fast to its side, into the teeth of which a pawl, *e*, operates so as to allow the wheel free motion in one direction but to hold it immovable in the opposite direction. Thus the cloth (when the rocker by its reverse motion releases it from between the operating parts A B) is made to slide across the heated face of the periphery of wheel B, and is thereby thoroughly ironed and smoothed as well as pressed. The acting surface of the rocking table should be covered with flannel or cloth or other suitable substance, so as to catch and hold the fabric to be operated upon; and this flannel or cloth I place upon a suitable frame or block, which can be taken off and replaced and adjusted upon the rocker as often as the flannel or covering requires to be renewed or other occasion requires. The drawing accompanying this specification for illustration represents a rock-

ing table with a convex face, and concave face for the ironing-wheel to correspond, and it is so represented because adapted to pressing and ironing articles of curved and irregular shape; but it is obvious that the two faces of the rocking table and the ironing-wheel may have other desired form, corresponding to each other, as in Fig. 3, so as to press and iron cloth flat, or otherwise, so as to flute it. The vibration or rocking motion of the rocker is made as rapid as convenience may require, and the operator has only to hold the cloth to the machine so as to have it drawn in between the rocking table and the ironing-wheel at each alternate vibration, which may be done with great ease and expedition, with very little practice.

I do not confine my invention to machines constructed precisely as described and driven by mechanical power. Machines for pressing and ironing, fluting, &c., may be constructed and used to be operated by foot and a treadle, or by turning a wheel or crank by hand, and which will embody my invention of the rocking table and ironing-wheel, suitably heated, as above described. Such machines will be extremely useful for families and for domestic use, and will save time, labor, and expense in the ironing of clothes as now generally performed by the hand and the heated flat-iron.

By changing the ironing-wheel B for others of suitable shape, and having the face of the table A to correspond, the machine will perform the operation of tucking, fluting, printing, and embossing ladies' under garments and other articles.

Having thus described my pressing and ironing machine, and the manner of constructing and operating the same, what I claim therein as my invention, and for which I desire Letters Patent, is—

The combination of the rocking table with the ironing, pressing, smoothing, or fluting wheel, so arranged that the cloth is caused to be drawn between the pressing and ironing or smoothing and fluting surfaces, and its withdrawal to be immediately followed, and in which latter operation the surface of the cloth is ironed, smoothed, or polished, the ironing or polishing wheel being for that purpose held stationary during such withdrawal by the ratchet-wheel and pawl or other suitable device, arranged, constructed, and operating substantially as described.

HUGH HAMILL.

Witnesses:
J. B. STAPLES,
MAX W. HEMINS.