June 23, 1959 E. E. MARTIN ET AL 2,891,425

METAL DRILLING APPARATUS

Filed Oct. 23, 1958 3 Sheets-Sheet 1

FIG. 1.

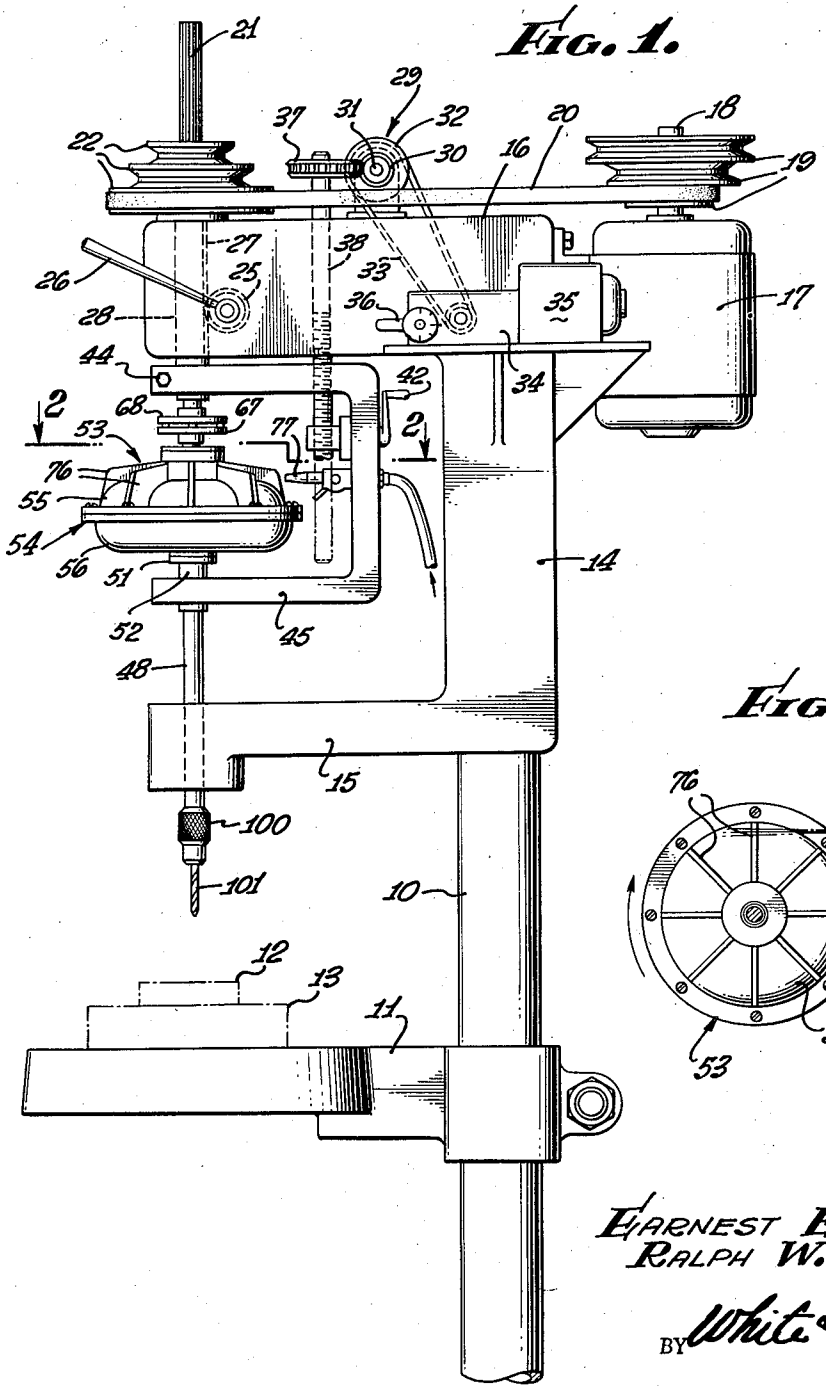

FIG. 2.

EARNEST E. MARTIN
RALPH W. WALSH
INVENTORS.

BY White & Hoffiger

ATTORNEYS.

June 23, 1959 E. E. MARTIN ET AL 2,891,425

METAL DRILLING APPARATUS

Filed Oct. 23, 1958 3 Sheets-Sheet 2

FIG. 3.

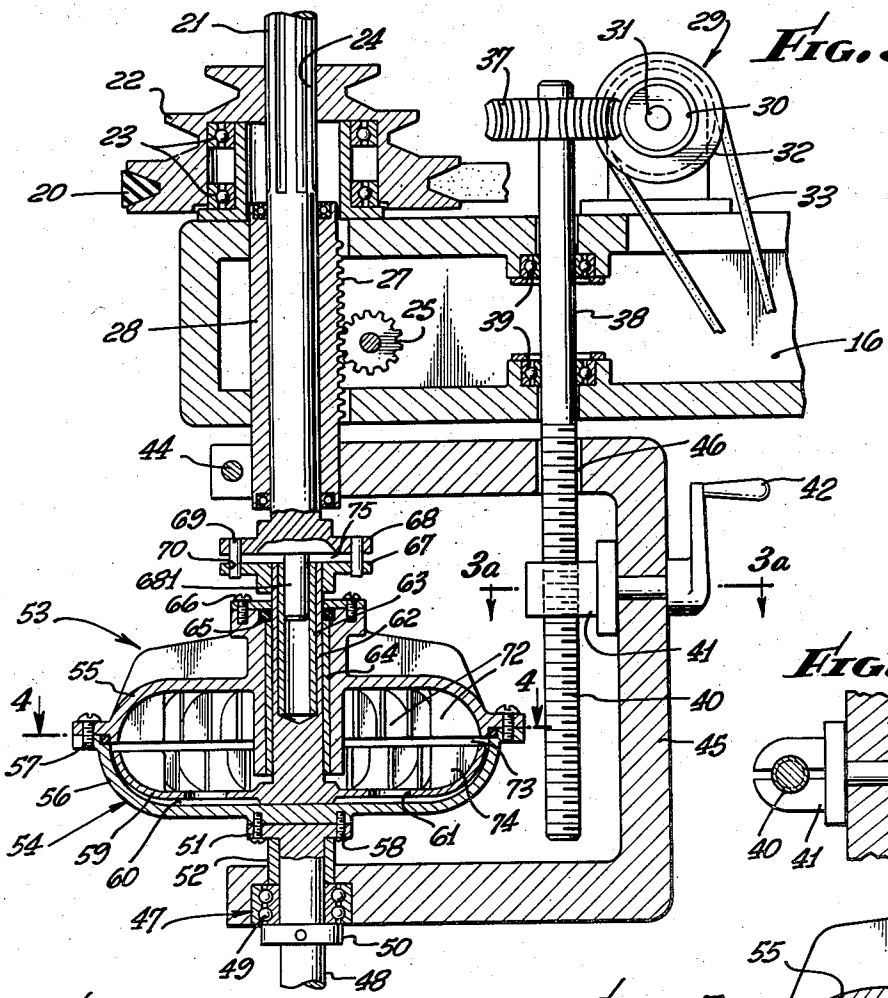

FIG. 3a.

FIG. 4.

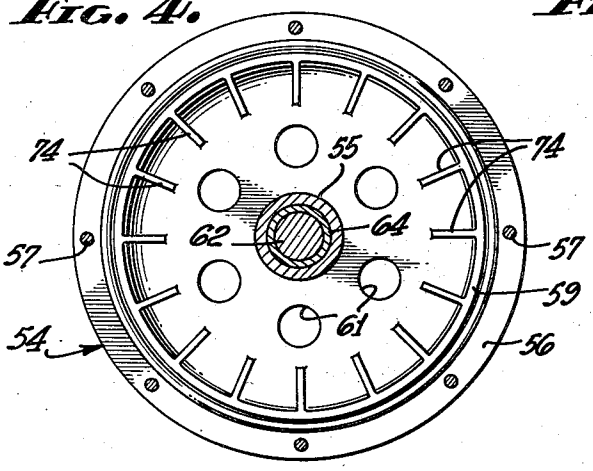

FIG. 5.

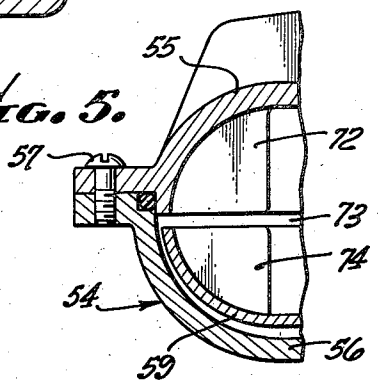

INVENTORS.
EARNEST E. MARTIN
RALPH W. WALSH
BY White and Haefliger
ATTORNEYS.

June 23, 1959 E. E. MARTIN ET AL 2,891,425

METAL DRILLING APPARATUS

Filed Oct. 23, 1958 3 Sheets-Sheet 3

FIG. 6.

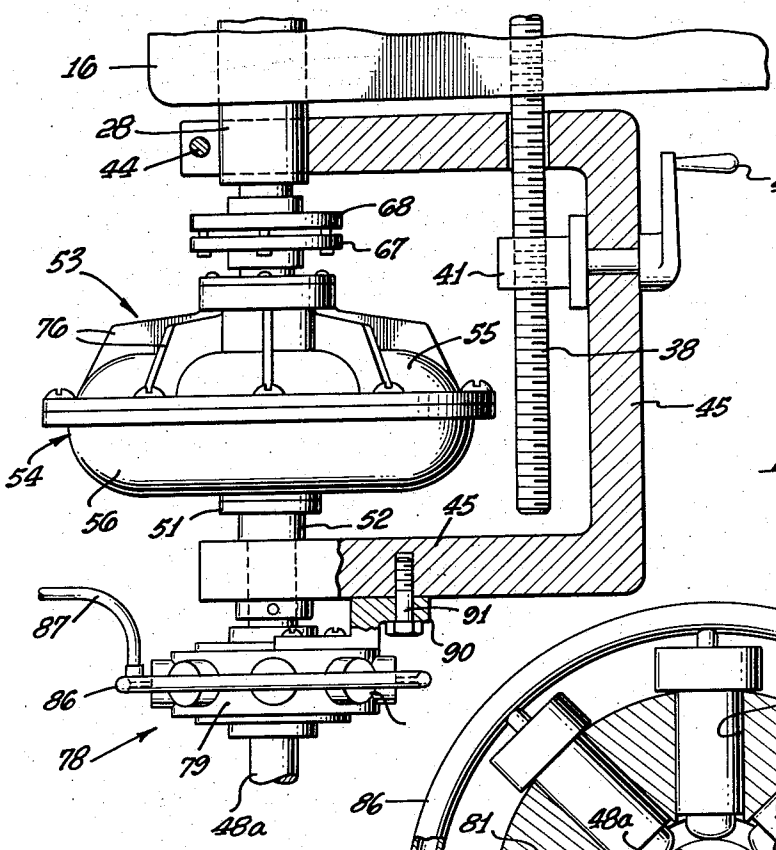

FIG. 8.

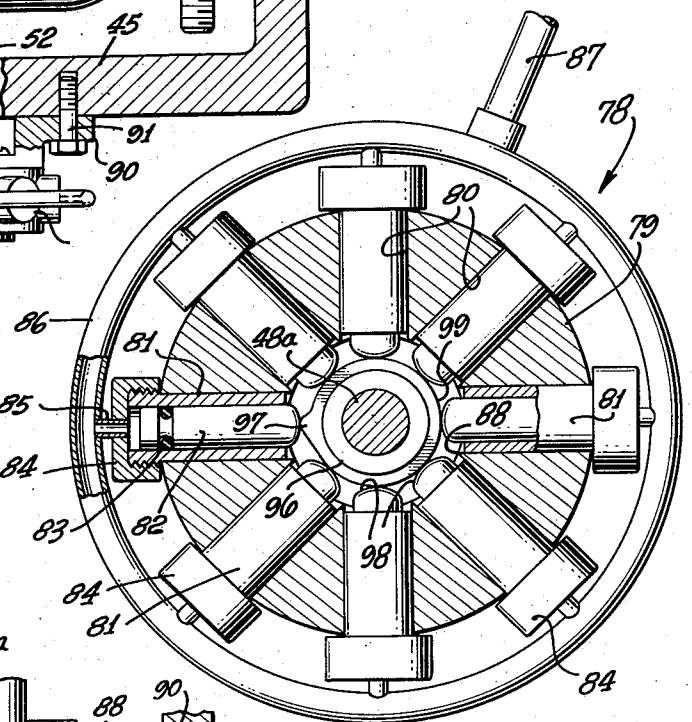

FIG. 7.

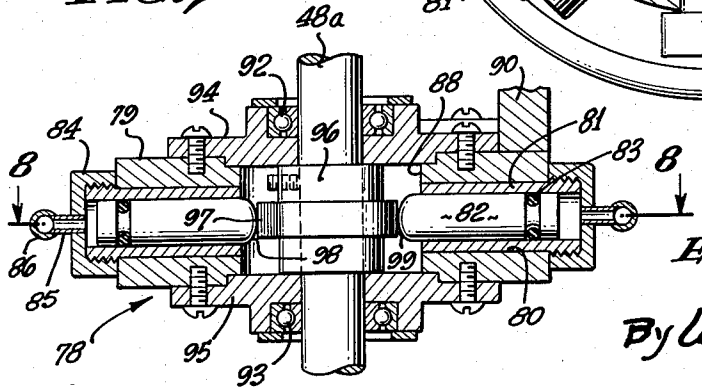

INVENTOR.
EARNEST E. MARTIN
RALPH W. WALSH
By White and Haefliger
ATTORNEYS.

United States Patent Office 2,891,425 Patented June 23, 1959

2,891,425

METAL DRILLING APPARATUS

Earnest E. Martin, Glendora, and Ralph W. Walsh, Westminster, Calif.; said Martin assignor to Ralph W. Walsh, Los Angeles, Calif.

Application October 23, 1958, Serial No. 769,125

17 Claims. (Cl. 77—5)

This invention relates generally to improvements in apparatus for metal drilling and like operations employing rotary drilling or cutting tools in forming holes within or through metals, ferrous and non-ferrous, alloys thereof, and of which all various kinds of steel, non-ferrous metals such as aluminum, manganese, copper, titanium and their alloys, are illustrative.

More particularly the invention is directed to the solution of major problems arising because of the cutting action of the tool, and which in the usual past practices have been responsible for certain undesirable cutting effects on the metal as well as adverse effects on the tool itself. One of these problems has been the inability in practical commercial operations to drill through various metals, e.g. sheet or plate stainless and other steels, without forming and leaving burrs at the drill exit side of the hole, and without customary heating of the drill that lessen its efficiency and life. The present invention affords a practical solution of these as well as related problems, in being productive of a cutting action of the tool that eliminate such burr formation, preserves accuracy in the hole size, and maintains the tool in a cool condition that obviates the disadvantages to the work and tool that are caused by excessive heating. Because of the importance of being able to drill under such conditions to the elimination of troublesome burr formations, the invention will be described typically as applied to that particular objective.

In ordinary metal drilling, the drill is axially advanced into or through the metal and rotated by a drive (e.g. from a constant speed motor through the customary speed reduction) which requires during the drilling operation, constant speed rotation of the drill under constant driving force. Thus the cutting edge of a drill is given no alternative against following unyieldingly a spiral cutting path dictated in part by manually or mechanically forced axial advancement of the drill. The result is formation of relatively extended segmental spiral cuttings corresponding to extended continuous cutting penetrations of the metal by the drill. The heat generated being a function of the extent and continuity of cutting, the drill thus becomes subjected to temperatures which often necessitate fluid cooling of the drill. A further incident of the manner in which the drill cuts, and the kind and extent of the cuttings formed, is the tendency of the drill in finally penetrating the metal, to leave or lay back a partially or fully circular burr, which for many manufactures, particularly in the precision category, cannot be tolerated. Consequently, presence of the burr entails a further removal operation, sometimes at expenditures of time and money approaching the drilling costs.

In avoiding burr formation and achieving the additional benefits in metal drilling as outlined above, we depart from the customary methods of powering the drill in respects partly characterized in terms of end result, by the action and effect of the drill to produce comminuted small flaky or powdery cuttings, as distinguished from curls or apparent spiral segments. While all the reasons

underlying the formation of our fine flaky cuttings are not fully understood, they apparently result from either or a combination of two principal conditions to which the drill is subjected: (1) maintenance of such rotational lost motion or slippage in the drill drive as will give the drill a rotationally cushioned or yielding cutting penetration of the metal, and (2) a torque or rotational impulsing of the drill while holding it against axial retraction from its cutting path.

In this latter respect the invention is to be distinguished from prior proposals to comminute the chips or cuttings in metal drilling by axially reciprocating the drill during its continued rotation, in effect by varying the constancy or sustained magnitude of the axial feed. To gain advantages of torque or rotational pulse or vibration effects to serve the purposes of our invention, we positively hold the drill against axially retractive movement and confine any pulse effects to the application of drilling torque.

As applied to forms of drilling equipment comprising the combination of an upper rotatable power source drive positively as constant speed, a spindle below, and a drill carried by the spindle, the invention contemplates creating in the drive, as between said power source and the spindle, a capacity for slippage that will result in rotation of the drill at speeds sufficiently slower than the power source to afford a full range of necessary cushioned or yielding penetration of the drill into the metal. And this same range may be such as to facilitate use or creation to best advantage of torque impulses to the drill.

A further important object of the invention is to impart a metal cutting tools such as a drill or thread tapping tool a cushioned or yielding cutting action by the transmission of the drive through a fluid medium in which slippage occurs, thus rendering the tool rotation impositive in accordance with the slippage. With respect to imparting torque pulses to the tool, the invention contemplates creation of such impulses within or in direct relation to the fluid transmission, or independently thereof. Thus we may employ a fluid coupling so designed as to create and transmit to the driven element, rotative pulses or vibrations, or the pulsing may be applied to the driven element extraneously of the fluid coupling proper.

All the features and objects of the invention, as well as the details of certain illustrative embodiments, will be fully understood and explained to better advantage in the following description of the accompanying drawings, in which:

Fig. 1 is a view showing in side elevation a typical apparatus embodiment of the invention in the form of a drill press;

Fig. 2 is a cross-sectional plan taken on line 2—2 of Fig. 1;

Fig. 3 is a view showing in section certain of the driving and driven parts of the apparatus appearing in Fig. 1;

Fig. 3*a* is a fragmentary section on line 3*a*—3*a* of Fig. 3;

Fig. 4 is an enlarged section on line 4—4 of Fig. 3;

Fig. 5 is a fragmentary enlargement of one sectional side of the fluid coupling housing;

Fig. 6 illustrates a variational form of the invention in the showing of an enlargement of the fluid coupling and associated mechanical tool pulsing mechanism;

Fig. 7 is a view showing in enlarged vertical section the pulsing mechanism; and

Fig. 8 is a cross-section on line 8—8 of Fig. 7.

It is to be understood that apparatus adapted to serve the objects and purposes of the invention discussed in the foregoing, may take various specific forms, and that the showing herein of the general aspects of a conventional drill press, but modified and altered to function in accordance with the invention, is to be regarded as illustrative only.

Referring to Fig. 1, the invention is shown to be embodied typically in a conventional drill press assembly comprising the usual post or standard 10 carrying the vertically adjustable table 11 on which is placed the work metal 12. As illustrative, the work metal may consist of a plate through which one or more holes are to be drilled so that the drill will pass through the plate into the block 13 below. Standard 10 may carry the usual head frame structure 14 including the lower horizontal arm 15 through which a later described spindle extends and within which the spindle is journaled, the frame assembly 14 also including an upper housing 16 for accommodation of parts driven by the head-mounted motor 17. As in the usual drill press, the motor shaft 18 carries differential size pulleys or sheaves 19 for selectively driving through belt 20, a shaft 21 carrying a reverse arrangement of sheaves 22, so that by selection of the driving and driven sheaves, shaft 21 may be driven at different speeds. The sheave assembly 22 is shown in Fig. 3 to be journaled on bearings 23 and to be splined at 24 to the shaft 21, so that by selection of the driving and driven sheaves, shaft 21 may be driven at different speeds. The sheave assembly 22 is shown in Fig. 3 to be journaled on bearings 23 and to be splined at 24 to the shaft 21, so that the latter during rotation may be axially advanced to feed the drill into the metal. The feed may be accomplished manually, as by the usual pinion 25 rotatable by hand lever 26 and meshing with rack teeth 27 on sleeve 28 fixed to the shaft 21, or we may use an automatic or mechanical feed as generally indicated at 29.

The mechanical feed is shown to comprise a gear 30 on shaft 31 carrying a pulley 32 driven by belt 33 from a transmission 34 powered by motor 35, the output speed of the transmission being variable by control lever 36. Gear 30 drives spur gear 37 carried by shaft 38 journaled in bearings 39 and threaded at 40 to drive a split nut 41 of the known type releasable by handle 42 from driven engagement with the shaft threads. Thus by selective operation or control of the handles 26 and 42, the drill feed may be either manual, or automatic at mechanically driven constant speed, the rate of which is controllable by the setting of the lever 36. As will be apparent, while the drill is being mechanically advanced, lever 36 is left free and the pinion 25 idles.

Fixed to the lower end of sleeve 28 by clamp bolt 44 and movable vertically with the sleeve, is a U-shaped bracket frame 45 which mounts the split nut 41 and its operating handle 42, and contains an opening 46 through which the shaft 38 passes. The lower arm of bracket 45 supports at 47 the drill spindle 48, the latter being journaled for rotation within radial and axial thrust bearing 49 and held against appreciable axial movement by ring 50 fixed to the spindle and bearing upwardly against bearing 49, and flange or ring 51 on the upper end of the spindle engageable downwardly against bearing sleeve 52 fixed within the bracket arm above the bearing. It is significant to note at this point that by reason of the described journaling of the spindle within the bracket arm, the spindle, and therefore the drilling or cutting tool, is held against axial retraction from its cutting path within the work metal.

The spindle 48 is driven by shaft 21 through a lost-motion coupling generally indicated at 53, the characterization "lost-motion" being given the coupling in that it permits 360 degree slippage in the drive and causes working rotation of the spindle at a slower speed than the drive above, within a range of speed differential allowing variations or impulsing of the rotative metal cutting speed of the drill. Otherwise regarded, the coupling 53 so cushions the drive transmission to the drill as to permit of yield in the rotational driving force that will enable the drill, in turn, to have a degree of yield in its rotational

cutting action in the metal, while the drill is being held against axial retraction from its cutting path.

Highly satisfactory results have been achieved by the employment of a fluid coupling at 53, shown typically to comprise a housing 54 having upper and lower sections 55 and 56 interconnected at 57, the lower section being attached by screws 58 to the upper end of the spindle 48 so that the housing rotates bodily with and at the same speed as the spindle. The lower section 56 of the housing contains a dished rotor 59 having clearance at 60 from the housing and containing bottom openings 61 which permit oil or other hydraulic fluid contained in the housing to occupy the clearance at 60 as well as the inside of the rotor to a degree depending upon the quantity of fluid used. The rotor 59 has an integral shaft 62 counterbored to receive a liner bearing sleeve 63, the shaft extending upwardly through bearing sleeve 64 carried by the housing and through an appropriate seal such as O-ring 65 held in place by retaining ring 66. The upper tubular end of shaft 62 carries a fixed flange 67 which is driven by flange 68 on the lower end of shaft 21 through pins 69 carried by the driving flange and slidable within openings 70 in flange 67. Thus, the tool rotative drive is transmitted from shaft 21 through pins 69 to the rotor 59, and thence frictionally through the fluid contained in the housing 56, to the housing and the spindle 48. The tubular upper end of shaft 62 is laterally supported by trunnion 681 projecting integrally from flange 68 within the bearing sleeve 63.

The upper section 55 of the housing may contain a circular arrangement of uniformly spaced vanes 72 having narrow, variable clearance at 73 from similar radial vanes 74 in the rotor 59. The housing and rotor vanes may correspond in number and uniform spacing, or they may vary relatively in number. We have used satisfactorily a coupling assembly constructed as shown, in which the housing contains eighteen vanes 72, and the rotor nineteen vanes 74, the housing having an internal diameter of about 6¼". The rotor 59 is accommodated for vertical floating movement in the housing, typically within a range of one-hundred and ninety thousandths inch, by maintaining that degree of clearance at 75 between the upper end of the shaft 62 and the bottom face of the flange 68. Thus during rotation, the rotor may float vertically within this range to a degree dependent upon such factors as the rotative speed and quantity of hydraulic fluid in the housing, with consequent variance of the clearance at 60 and 73.

In actual practice, we have obtained satisfactory results by so governing the operation of the fluid coupling as to maintain during drilling a spindle speed of around 80 percent of the rotative speed of the drive shaft 21. Depending upon particular conditions of drilling or tapping, the relative spindle speed may range typically within 70 to 90 percent of the drive shaft speed. Governing of the relative speeds (which are infinitely variable within that range because of progressive slippage in the coupling) may be effected in accordance with the quantity of hydraulic fluid put into the coupling, in relation to the speed of the driving shaft 21. Thus, for drive speeds within the range of from 18 to 4800 r.p.m., we may use between about 1½ and 7 ozs. of hydraulic fluid, the lesser quantities of the fluid being used at the higher drive speeds. As will be understood, the drive transmission occurs by reason of frictional transmission through the fluid within the clearance space 60, and particularly as the fluid is centrifugally thrown outwardly into the narrowing clearance, and additionally where the quantity of hydraulic fluid is sufficient to occupy at least some of the vane clearance at 73, by reason of the fluid frictional transmission at this location. It is contemplated that the effect or relation of the vanes may be such as to cause creation and transmission through the housing to the spindle, of rotationally pulsing effects as

the vanes pass each other. As will appear, it is also contemplated that pulse effects may be obtained additionally or otherwise, and independently of any pulsing effects created by relative passage of the vanes.

Figs. 1 and 2 illustrate one method for rotationally impulsing the tool independently of slippage conditions within the fluid coupling. Here the upper section of the housing **55** is shown to carry a plurality of equally spaced radial vanes **76**, typically eight in number, against which is directed during drilling, a high velocity air jet from nozzle **77** carried by the bracket **45**. The resistance presented by the air jet intermittently to the housing rotation as the vanes are rotated in the direction of the arrow successively into the path of the air stream, produces rotational impulsing of the cutting tool at a frequency in accordance with the rotative speed and number of vanes.

Figs. 6 to 8 illustrate a variational method and means for rotationally impulsing the tool, in this instance by imposing intermittently and mechanically applied restraint to the spindle rotation by means of the detenting mechanism generally indicated at **78**. The latter is shown to comprise a circular body **79** containing a plurality, typically eight, of radial bores **80** each containing a liner cylinder **81** within which reciprocates a detenting piston **82** carrying a seal ring **83**. Each cylinder carries at its outer end a cap **84** through which fluid pressure against the piston is maintained by way of a tubular connection **85** with the manifold **86** maintained constant, though variable, air pressure through connection **87** forming suitable compressed air supply source, not shown. The body **79** has a central bore **88** through which the spindle **48***a* extends, the body assembly being held in fixed relation to the spindle axis by bracket **90** attached at **91** to the underside of the bracket frame **45**. The spindle is journaled within bearings **92** and **93** within cover plates **94** and **95** secured to the body. Fixed to the spindle within the body bore **88** is a sleeve **96** carrying a cam node **97** engageable as the spindle rotates, successively against the rounded inner ends **98** of the plungers **82** to displace each plunger successively and outwardly from its riding engagement with the sleeve surface **99**, against the resistance air pressure applied to the outer end of the plunger. Thus the transient resistances to the spindle rotation resulting from successive displacements of the plungers, tends to correspondingly retard, and in effect, impulse the cutting rotation of the tool.

Referring again to Fig. 1, the spindle **48** is shown to carry below the arm **15** a suitable tool holding means such as a conventional chuck **100**, within which is held the tool **101**. Where the purpose of the metal cutting is to drill through the work **12**, the tool **101** may be a standard metal drill, typically up to ⅜" size, requiring no special modifications in order to accomplish drilling with powdery chip formation and to the complete elimination of any residual burr at the bottom of the hole drilled through the metal. As previously indicated, the described equipment has been found desirable also for thread tapping purposes utilizing instead of a drill, a standard tapping tool.

By reason of the described conditions imparting an essentially yielding or cushioned drive to the tool, and within a speed range below that of the drive shaft **21** permitting flexibility to the tool as it encounters the resistance of the metal to cutting, the effect of the tool, drill or tap, is to produce powdery or fine flaky cuttings, formation of which occurs throughout the advancement of the drill through the metal, so that ultimately no burr appears at the exit side. As a further consequence of the discontinuity of the cutting action of the tool, the latter is found to remain cool to the extent of eliminating all temperatures that could be detrimental to the life or efficiency of the tool. Finally, it may again be observed that these results flow from controlling in the manner described, the rotational cutting action of the tool while maintaining steady axial advancement of the tool so that it has no significant axial retraction throughout the course of its cutting travel.

We claim:

1. In metal drilling or tapping apparatus, the combination comprising a rotative power shaft, a tool, coupling means operable with infinite speed variability within a range of slippage to transmit the power shaft rotation to the tool whereby the tool has yielding cutting approach to the work metal with consequent formation of comminuted chip-like cuttings, said coupling means including means frictionally and constantly transmitting cutting torque to the tool throughout its revolutions with constant slippage throughout 360 degree relative rotation between the tool and power shaft and with simultaneous freedom given the tool for rotative impulsing, and means for advancing the tool in its cutting action while axially supporting the tool independently of the work metal.

2. In metal drilling or tapping apparatus, the combination comprising a rotative power shaft, a tool, coupling means operable with infinite speed variability within a range of slippage to transmit the power shaft rotation to the tool whereby the tool has yielding cutting approach to the work metal with consequent formation of comminuted chip-like cuttings, said coupling means including means frictionally and constantly transmitting cutting torque to the tool throughout its revolutions with constant slippage throughout 360 degree relative rotation between the tool and power shaft and with simultaneous freedom given the tool for rotative impulsing, and means comprising a rotary feed control for advancing the tool in its cutting action while axially supporting the tool independently of the work metal.

3. In metal drilling or tapping apparatus, the combination comprising a rotative power source, a tool holding means, coupling means operable with infinite speed variability within a range of slippage to transmit the power source rotation to the tool holding means whereby a tool to be carried thereby has yielding cutting approach to the work metal with consequent formation of comminuted chip-like cuttings, said coupling means including means frictionally and constantly transmitting cutting torque to the tool holding means throughout its revolutions with constant slippage throughout 360 degree relative rotation between the tool holding means and power shaft so that simultaneous freedom may be given the tool for rotative impulsing, means rigidly holding the tool holding means against axial movement in either direction, and means for mechanically advancing said holding means to penetrate the tool into the work metal.

4. In metal drilling or tapping apparatus, the combination comprising a rotative power shaft, a tool, coupling means including relatively rotating members operating in fluid with infinite relative speed variability within a range of slippage to transmit the power shaft rotation to the tool whereby the tool has yielding cutting approach to the metal with consequent formation of comminuted chip-like cuttings, said coupling means including means frictionally and constantly transmitting cutting torque to the tool throughout its revolutions with constant slippage throughout 360 degree relative rotation between the tool and power shaft and with simultaneous freedom given the tool for rotative impulsing, and means for advancing the tool in its cutting action while axially supporting the tool independently of the work metal.

5. Apparatus according to claim 4 in which said fluid is a non-magnetic liquid.

6. In metal drilling or tapping apparatus, the combination comprising a rotative power shaft, a tool, coupling means interposed between said shaft and the tool and operable with slippage to transmit the power shaft rotation to the tool in rotational impulses whereby the

tool has yielding cutting approach to the metal with consequent formation of comminuted chip-like cuttings.

7. In metal drilling or tapping apparatus, the combination comprising a rotative power shaft, a tool, coupling means interposed between said shaft and the tool and operable with slippage to transmit the power shaft rotation to the tool in rotational impulses whereby the tool has yielding cutting approach to the metal with consequent formation of comminuted chip-like cuttings, and means for advancing the tool in its cutting action while axially supporting the tool independently of the work metal.

8. In metal drilling or tapping apparatus, the combination comprising a rotative power shaft, a driven shaft, a tool rotated by the driven shaft, and means including a lost-motion coupling for transmitting rotation from said power shaft to the driven shaft and operable to simultaneously rotate and cause rotational pulsing of the tool, said coupling maintaining infinite variability in the relative speeds of said shafts within the range of lost-motion transmittable through the coupling.

9. Apparatus according to claim 8, in which said coupling includes a liquid-containing housing and a rotor running in the liquid, said coupling operating to transmit rotation to the drill at a substantially slower speed than the rotative speed of said power source.

10. In apparatus for metal drilling, the combination comprising a rotative power shaft, a spindle, a drill carried by said spindle, a slippage coupling interconnecting said power shaft and spindle for infinitely variable relative rotation within the slippage range whereby the drill because of slippage in the coupling has yielding cutting approach to the metal, said coupling including means frictionally and constantly transmitting cutting torque to the tool throughout its revolutions with constant slippage throughout 360 degree relative rotation between the tool and power shaft and with simultaneous freedom given the tool for rotative impulsing, and means for advancing the spindle and tool to penetrate the metal while axially supporting the tool and spindle independently of the metal.

11. In apparatus for metal drilling, the combination comprising a rotative power shaft, a spindle and a drill carried by said spindle, a slippage coupling interconnecting said power shaft and spindle for infinitely variable relative rotation within the slippage range whereby the drill because of slippage in the coupling has yielding cutting approach to the metal, said coupling including means frictionally and constantly transmitting cutting torque to the tool throughout its revolutions with constant slippage throughout 360 degree relative rotation between the tool and power shaft and with simultaneous freedom given the tool for rotative impulsing, and means including a feed screw for actuating the spindle and drill in their cutting advancement and blocking the drill against axial retraction during said advancement.

12. In apparatus for metal drilling, the combination comprising a rotative power shaft, a spindle and a drill carried by said spindle, a slippage coupling interconnecting said power shaft and spindle whereby the drill because of slippage in the coupling has yielding cutting approach to the work metal, said coupling including means frictionally and constantly transmitting cutting torque to the tool throughout its revolutions with constant slippage throughout 360 degree relative rotation between the tool and power shaft and with simultaneous freedom given the tool for rotative impulsing, and means for mechanically feeding said spindle and drill toward the work metal at substantially constant speed during drilling and axially supporting the drill independently of the work metal.

13. In apparatus for metal drilling or tapping, the combination comprising a rotative power shaft, a spindle and a means carried by said spindle and adapted to hold a drilling or tapping tool, a slippage coupling including an outer body and an inner vaned rotor interconnecting said power shaft and spindle whereby the tool because of slippage in the coupling has yielding cutting approach to the metal, said coupling being a fluid coupling whereby in its cutting action the tool rotates at a slower speed than said power source and said shaft and spindle have infinite relative speed variability within the coupling slippage range.

14. In apparatus for metal drilling, the combination comprising a spindle, a tool chuck carried by the spindle and a rotative power shaft rotatively coupled to the spindle, means for positively driving and axially advancing the chuck toward the metal during drilling while vertically supporting the chuck independently of the work metal and positively blocking any retractive movement of the chuck during said advancement, and means between said shaft and chuck operable to rotationally impulse the chuck during drilling.

15. In apparatus for metal drilling, the combination comprising a spindle, a tool carried by the spindle, and a rotative power shaft rotatively coupled to the spindle, means for axially advancing the tool into the metal while supporting the tool independently of the metal and blocking the tool against axial retraction in its cutting path, means for simultaneously rotationally impulsing the tool, and means yieldably transmitting the rotative drive of said power shaft to the tool.

16. In apparatus for metal drilling, the combination comprising a frame, an upper rotating drive shaft supported by the frame, a lower spindle and a drill carried by the spindle, a hollow coupling including one section connected to said drive shaft and a second relatively rotatable section connected to said spindle, hydraulic fluid in said coupling whereby said one section frictionally drives the second section at reduced speed, and means supported from the frame and journaled to the spindle below the coupling for axially advancing said drill into the work metal and operable to axially support the drill during drilling independently of the work metal.

17. In apparatus for metal drilling, the combination comprising a frame, an upper rotating drive shaft supported by the frame, a lower spindle and a drill carried by the spindle, a hollow coupling including one section connected to said drive shaft and a second relatively rotatable section connected to said spindle, hydraulic fluid in said coupling whereby said one section frictionally drives the second section at reduced speed, a yoke supported from the frame above the coupling and journaled to the spindle below the coupling to vertically support the spindle and drill during drilling independently of the work metal, and means for mechanically driving said yoke downwardly to advance the drill during drilling.

References Cited in the file of this patent

UNITED STATES PATENTS

1,994,772	Landriani	Mar. 19, 1935
2,358,954	Verderber	Sept. 26, 1944
2,759,580	Bower	Aug. 21, 1956
2,807,176	Butcher et al.	Sept. 24, 1957

FOREIGN PATENTS

198,473	Great Britain	June 7, 1923