J. B. MAY.

LATCH.

APPLICATION FILED NOV. 14, 1917.

1,329,719. Patented Feb. 3, 1920.

Fig. 1.

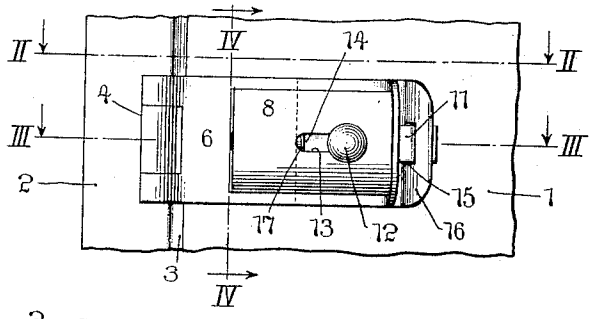

Fig. 2.

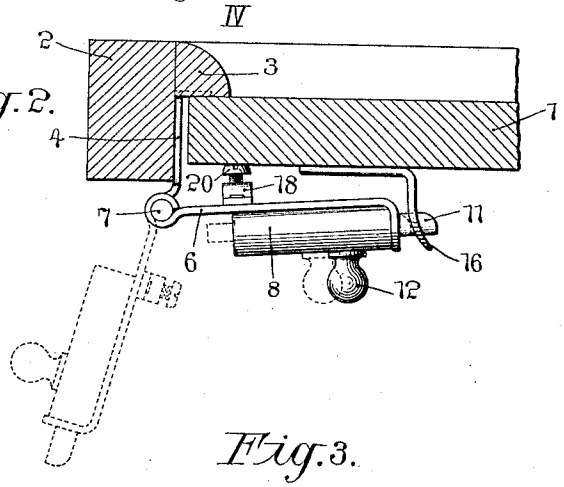

Fig. 3.

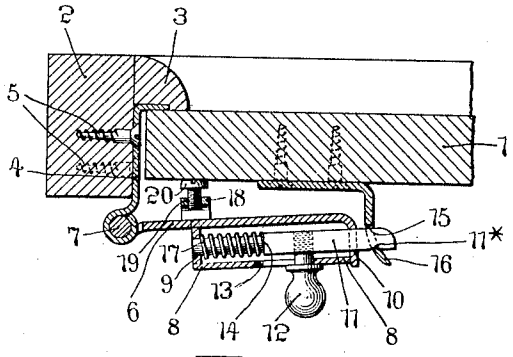

Fig. 4.

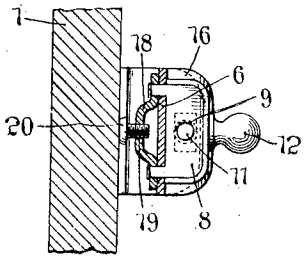

Inventor:
John B. May
by his attorneys
Ben Serrard

UNITED STATES PATENT OFFICE.

JOHN B. MAY, OF BROOKLYN, NEW YORK.

LATCH.

1,329,719. Specification of Letters Patent. Patented Feb. 3, 1920.

Application filed November 14, 1917. Serial No. 201,932.

To all whom it may concern:

Be it known that I, JOHN B. MAY, a citizen of the United States, and resident of the borough of Brooklyn, in the city and State of New York, have invented a new and useful Improvement in Latches, of which the following is a specification.

My invention relates to door latches, with the object in view of providing a latching device which is so constructed and located with respect to the door and its frame that it cannot be tampered with or forced open from outside the door.

Another object is to provide a device of this character which will hold the door, when latched, firmly against its frame, thus making it substantially airtight and preventing it from rattling.

A further object is to provide a device of this character which will be simple and efficient in its operation, easy to attach and inexpensive to construct.

A still further object is to provide certain improvements in the construction, form and arrangement of the various parts, whereby the above named objects may be effectively carried out.

A practical embodiment of my invention is represented in the accompanying drawings, in which—

Figure 1 represents an elevation of a portion of a door and its frame, showing my latching device in operative position,

Fig. 2 represents a horizontal section taken in the plane of the line II—II of Fig. 1, looking in the direction of the arrows, showing, in dotted lines, the spring bolt at the moment of its removal from its keeper and the latch in the position it occupies when the door is open,

Fig. 3 represents a horizontal section taken in the plane of the line III—III of Fig. 1, looking in the direction of the arrows, and

Fig. 4 represents a vertical section taken in the plane of the line IV—IV of Fig. 1, looking in the direction of the arrows.

The door is denoted by 1, its frame by 2, and its inner stop members, only one of which is shown, by 3. The angle iron 4, which is attached by means of screws 5 to the inner face of the frame member 2, abuts the inner face of the stop member 3 and is attached to the hinge member 6 by means of the pintle 7.

Attached to the hinge 6 or made integral therewith, is a casing 8, provided with openings 9 and 10 at opposite ends thereof which act as guides or bearings for a draw-bolt 11. The knob or handle 12 is attached to the bolt 11 and projects through an elongated slot 13 in the casing 8. The inner end of the bolt 11 is reduced to form the abutment 14 and the other end projects from the casing 8 so as to enter a slot 15 in a keeper 16 attached to the door 1 at a point removed from its edges.

The bolt 11 is normally held in the slot 15 of the keeper 16 by a coiled spring 17 which is arranged around the reduced portion of the bolt and between the inner end of the casing 8, and the abutment 14. As an additional means for holding the bolt 11 in its slot 15, a groove 11*, adapted to coact with the outer wall of the slot 15, is provided in the outer face of the bolt near its end.

A lug or bridge member 18 is riveted or otherwise attached to the inner face of the hinge member 6 and is provided with a screw threaded opening 19 to receive a flat headed screw 20.

In operation, when the door is closed the hinge member 6 is swung around on its pivot and the bolt 11 pressed back by means of the handle 12 against the tension of the spring 17 until the bolt is in a position to enter the slot 15 of the keeper 16 when the handle is released. It will be seen that the screw 20 now engages the face of the door and tends to press it back into firm contact with the door stop member 3. The screw may be adjusted to increase or lessen the pressure on the door, as desired. When the door is thus latched, any means introduced between the edge of the door and the frame for the purpose of manipulating the draw-bolt will be ineffective since the bolt and its keeper cannot be reached from that point. Furthermore, it will be impossible to pry off the angle iron by any inward pressure on the door or the latch members, since the screws 5 are of such a length that they cannot be removed while the door is closed.

An additional means for preventing tampering with the latch is provided in the screw 20, which puts such a pressure on the door that it would be very difficult to insert any instrument for this purpose between the door and its frame or stop. This pressure also prevents any attempt to shake the bolt latch loose by rattling the door.

It will be seen that when the door is open

the hinge member and bolt may be swung around out of the way in the position shown in dotted lines in Fig. 2, and the keeper may then be used as a knob for the door.

It is evident that changes may be resorted to in the form, construction and arrangement of the parts without departing from the spirit and scope of my invention; and hence I do not intend to be limited to the specific details set forth except as they may be included in the claims.

What I claim is:—

1. In combination with a door and its frame, a keeper attached to said door, a latch attached to said frame, and adapted to coact with said keeper, and adjustable means operating between the latch and the door for holding the door tightly against its frame.

2. In combination with a door and its frame, a hinge member attached to the inner face of the frame adjacent the edge of the door, a bolt carried by said hinge member, a keeper to receive the said bolt, attached to said door at a point removed from its edge, and means operating between the hinge member and the door for holding the door tightly against its frame.

3. In combination with a door and its frame, a hinge member attached to the inner face of the frame adjacent the edge of the door, a bolt carried by said hinge member, a keeper to receive the said bolt, attached to said door at a point removed from its edge, and means carried by said hinge member for holding the door tightly against its frame.

4. In combination with a door and its frame, a hinge member attached to the inner face of the frame adjacent the edge of the door, a bolt carried by said hinge member, a keeper to receive the said bolt, attached to said door at a point removed from its edge, and adjustable means operating between the hinge member and the door for holding the door tightly against its frame.

5. In combination with a door and a frame provided with stop members for limiting the inward movement of the door, a hinge member attached to the inner face of the frame adjacent the edge of the door, a bolt carried by said hinge member, a keeper to receive the said bolt, attached to said door at a point removed from its edge, and means carried by said hinge member for holding the door tightly against the said stop members.

6. In combination with a door and its frame, a hinge member attached to the inner face of the frame adjacent the edge of the door, a bolt carried by said hinge member, a keeper to receive the said bolt, attached to said door at a point removed from its edge, and adjustable means carried by said hinge member for holding the door tightly against its frame.

7. In combination with a door and a frame provided with stop members for limiting the inward movement of the door, a latch, a latch attaching member secured to the inner face of the frame and having its inner end lying against the adjacent stop member whereby the door, when closed, will bear on said end, and a keeper adapted to coact with said latch attached to said door at a point removed from its edge.

8. In combination with a door and a frame provided with stop members for limiting the inward movement of the door, a latch, a latch attaching member secured to the inner face of the frame and abutting against the adjacent stop member, a keeper adapted to coact with said latch, attached to said door at a point removed from its edge and means intermediate the latch and the door for forcing the door tightly against the stop member.

In testimony, that I claim the foregoing as my invention, I have signed my name this 12th day of November 1917.

JOHN B. MAY.