April 30, 1974 W. A. WISEMAN Re. 27, 996

ENGINE DRIVE SYSTEM

Original Filed Aug. 1, 1966

5 Sheets-Sheet 1

FIG. 1

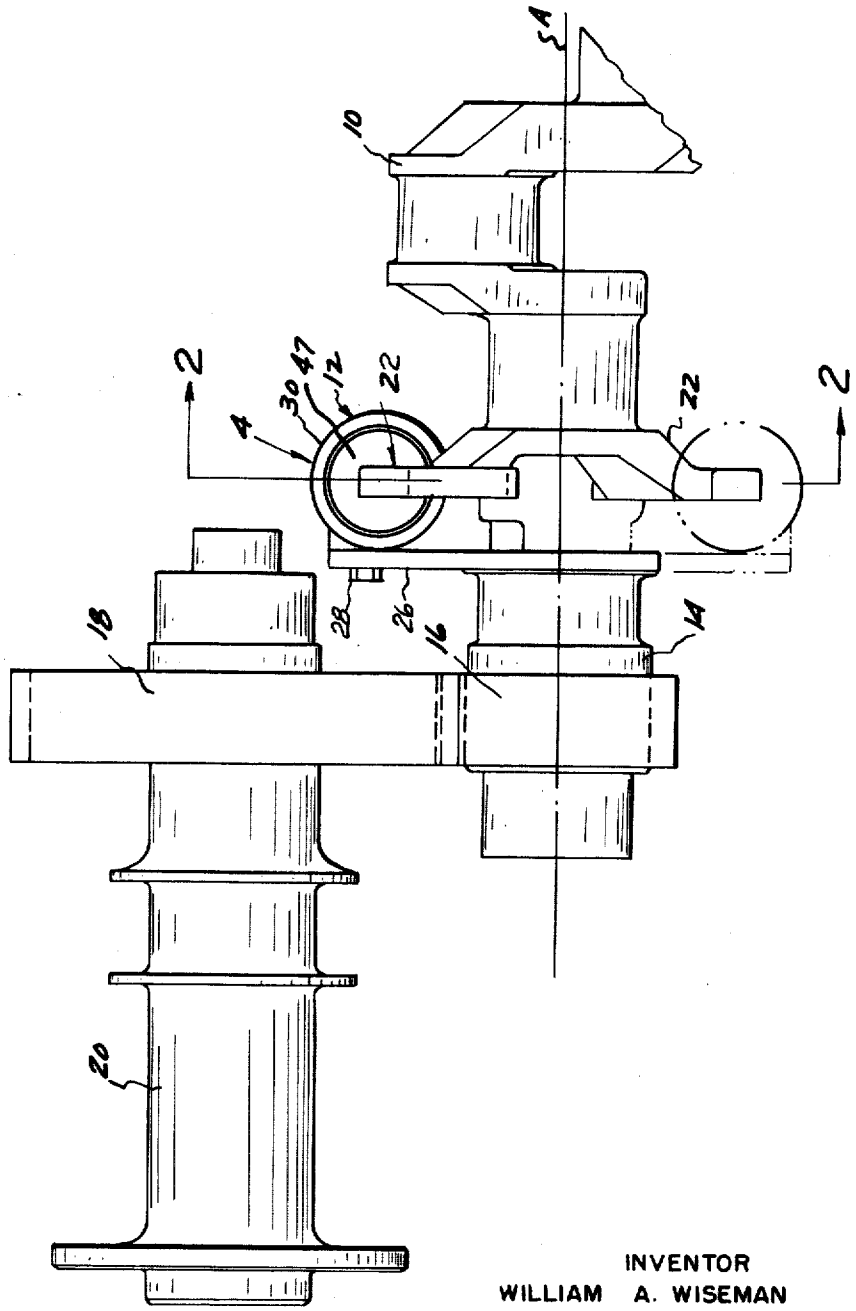

INVENTOR
WILLIAM A. WISEMAN

BY Hauke Kraus & Gifford
ATTORNEYS

FIG. 2

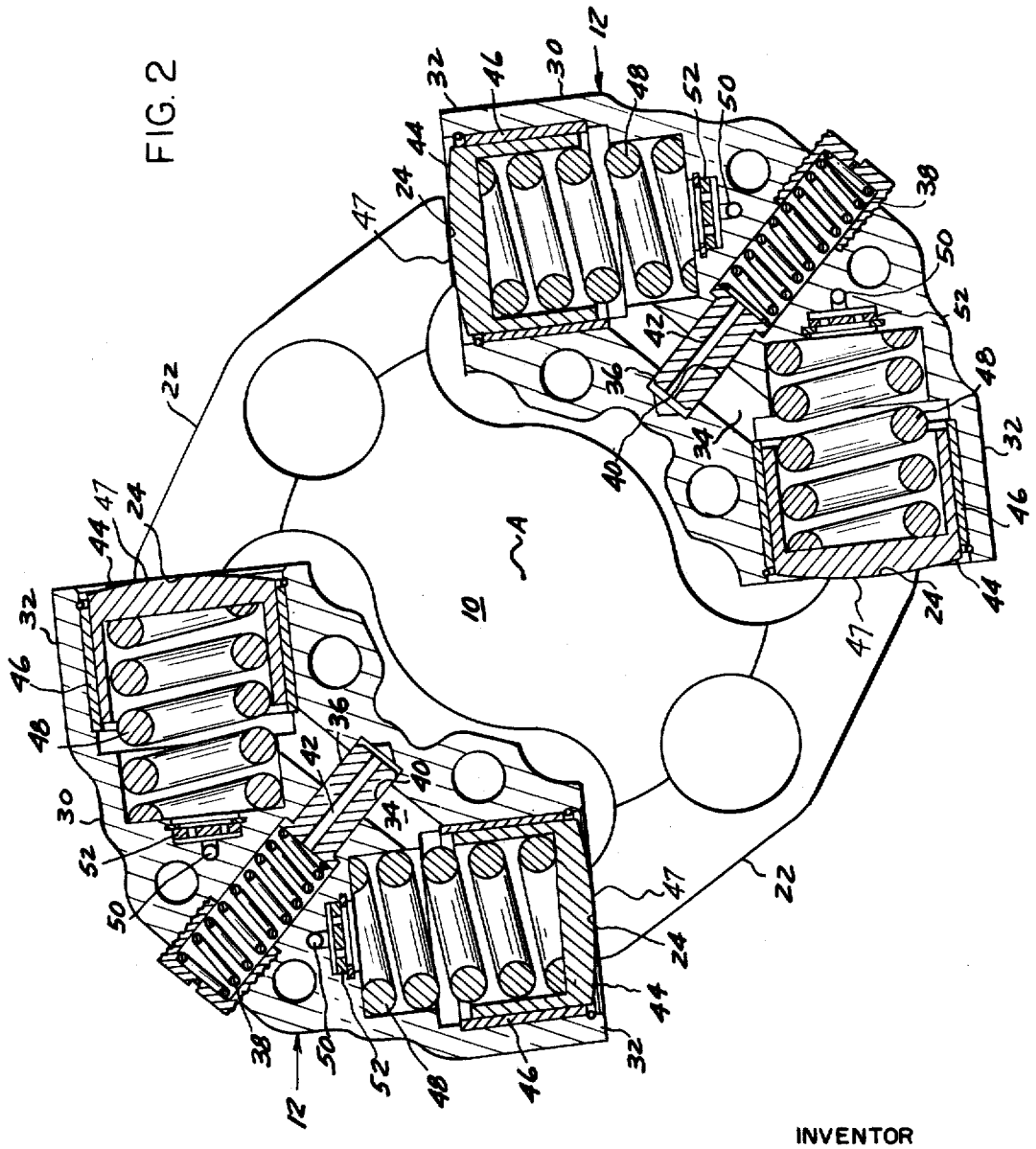

INVENTOR

WILLIAM A. WISEMAN

BY Hauke, Kraus, & Gifford

ATTORNEYS

ENGINE DRIVE SYSTEM

Original Filed Aug. 1, 1966 5 Sheets-Sheet 5

FIG. 3

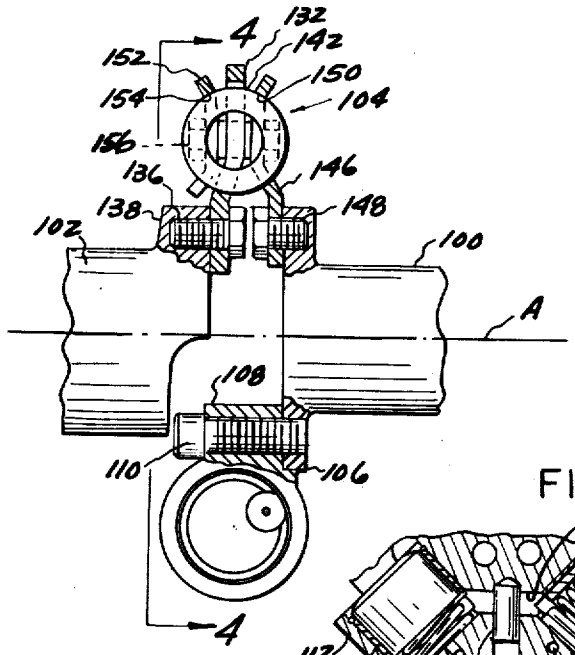

FIG. 5

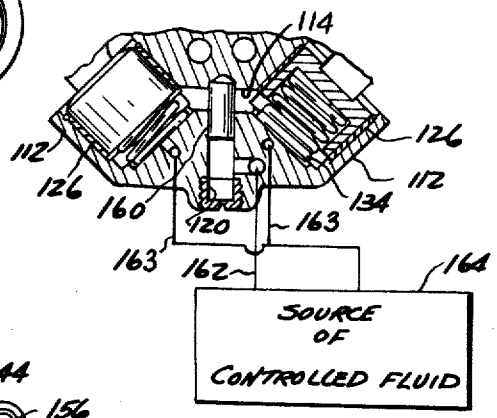

FIG. 4

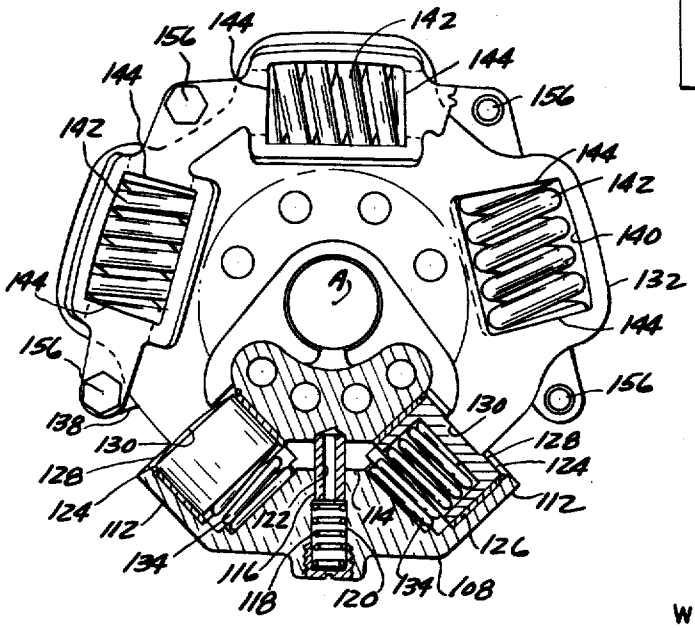

INVENTOR
WILLIAM A. WISEMAN

Hauke, Kraus, & Gifford

BY

ATTORNEYS

ENGINE DRIVE SYSTEM

Original Filed Aug. 1, 1966 5 Sheets-Sheet 4

FIG. 6

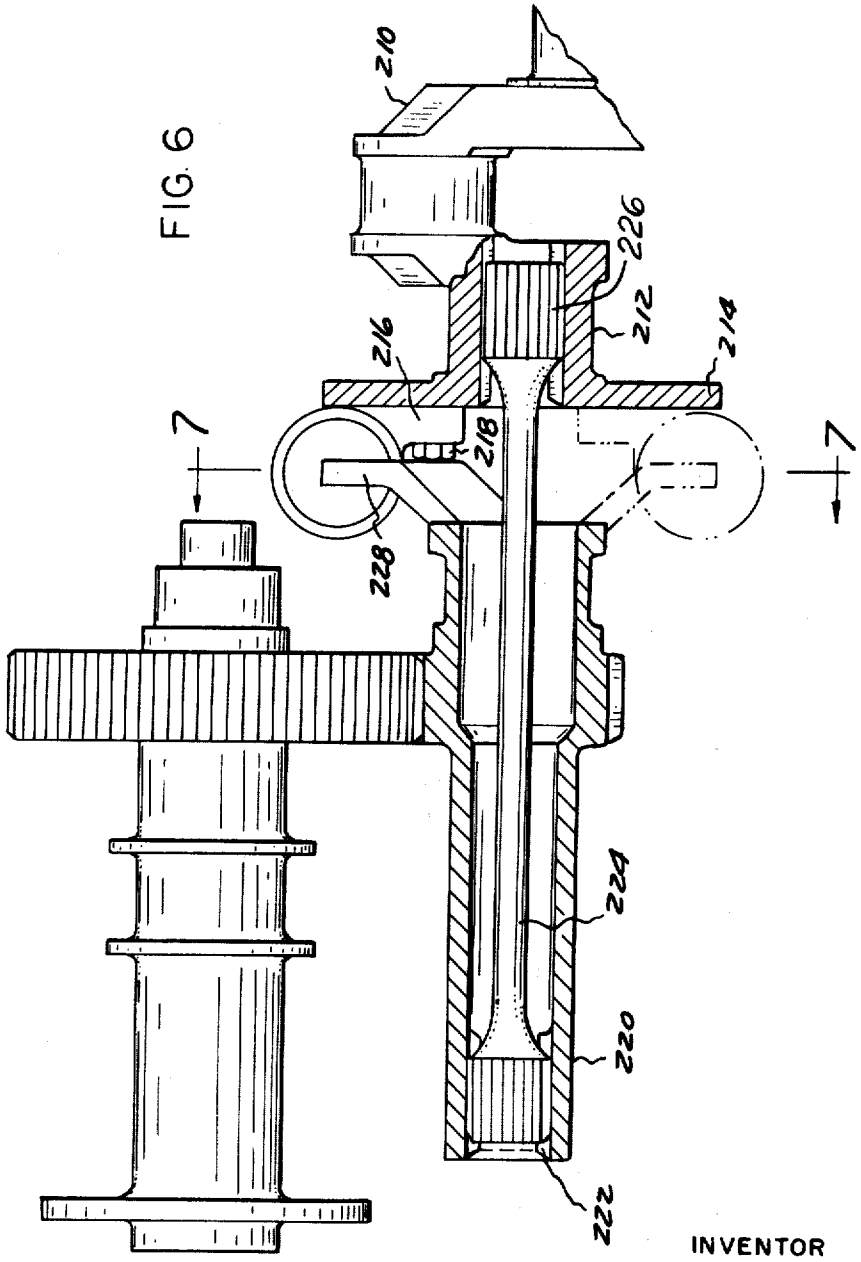

INVENTOR
WILLIAM A. WISEMAN

BY Hauke, Kain, & Gifford

ATTORNEYS

April 30, 1974 W. A. WISEMAN Re. 27, 996

ENGINE DRIVE SYSTEM

Original Filed Aug. 1, 1966 5 Sheets-Sheet 5

FIG. 7

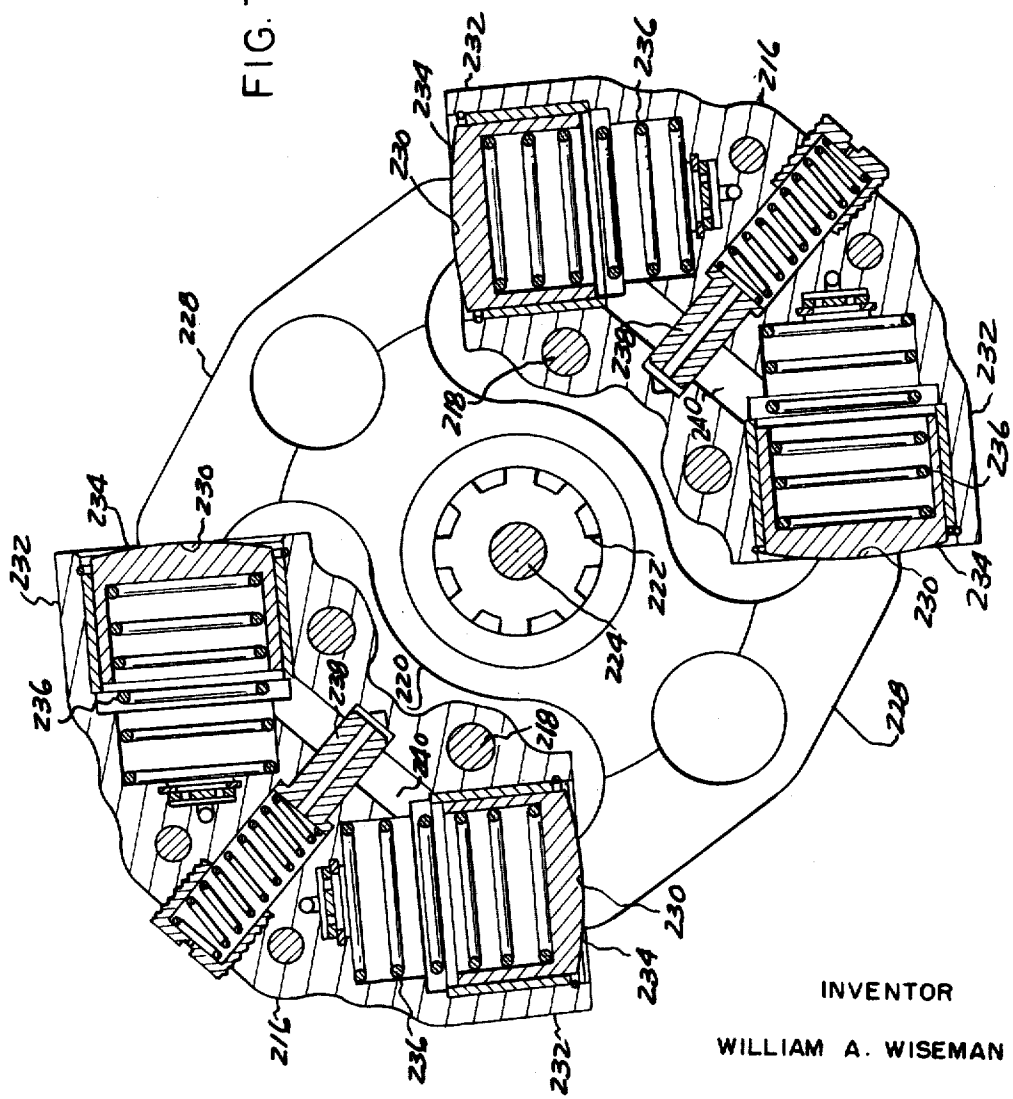

INVENTOR

WILLIAM A. WISEMAN

BY Hauke, Kraus, & Gifford

ATTORNEYS

United States Patent Office

Re. 27,996
Reissued Apr. 30, 1974

27,996

ENGINE DRIVE SYSTEM

William A. Wiseman, Falls Church, Va., by Continental Motors Corporation, Muskegon, Mich., assignee

Original No. 3,421,343, dated Jan. 14, 1969, Ser. No. 569,489, Aug. 1, 1966. Application for reissue Nov. 16, 1972, Ser. No. 307,044

Int. Cl. F16d *3/14*

U.S. Cl. 64—27 R 22 Claims

Matter enclosed in heavy brackets [ ] appears in the original patent but forms no part of this reissue specification; matter printed in italics indicates the additions made by reissue.

ABSTRACT OF THE DISCLOSURE

A driving system connecting the crankshaft of an engine with a driven shaft and including a first means providing a relatively rigid connection between the crankshaft and the driven member, a second means providing a resilient connection between the crankshaft and the driven member and a hydraulic system including a centrifugally movable valve member for automatically changing the connection from the first means to the second means at a predetermined speed to thereby change the natural frequency of the drive system and to avoid destructive resonant frequencies.

My invention relates to driving systems connecting the crankshaft of an engine with the driven output such as the propellor shaft of an aircraft engine, and more particularly to a drive system constructed to eliminate the buildup of resonant frequencies in such engines.

It is well [know] *known* that at certain speeds, known as critical [speed] *speeds* rotating drive systems can become dynamically overstressed with large torsional amplitudes. This phenomenon is due to the resonance frequency which occurs when the rotation speed in revolutions per second corresponds to the natural frequencies or torsional vibration of the drive system.

The present invention is especially useful in geared drive systems which at some speed will produce such resonance frequencies producing destructive vibrations due to the presence of a resonant frequency which cannot be passed through without using some vibration damping device. In small engines particularly, conventional damping systems using heavy counterweights or pendulum dampers sacrifice light weight. Further, such pendulum dampers can only be tuned to one order of resonant frequency and will still permit vibrations at other orders.

An object of the present invention is to eliminate destructive vibrations in an engine drive system having a rotating driving member and a rotating driven member by providing an engagement between the two rotating members wherein the drive system has a relatively high natural frequency of vibration at relatively low rotating speeds and a relatively low natural frequency of vibration at relatively high rotating speeds so that the system will never operate at a speed matching the resonant frequency which would cause harmful buildup of vibrations.

Another object of the invention is to control the natural frequency of such a drive system by providing an engaging means responsive to the rotating speed of the driving member and operative at relatively high rotational speeds to provide the drive system with a relatively resilient low natural frequency and operating at relatively low rotational speeds to provide the system with a relatively stiff high natural frequency. By providing such a variable connection between the drive shaft and the driven shaft, extreme resonant frequencies can be effectively bypassed as the engine speed is increased.

A further object of the present invention is to avoid

resonant vibrations in an engine drive system by providing an engagement between the driving and driven members having a selectively variable natural frequency so that the engine never has a natural resonant frequency corresponding to the rotating speed of the drive system.

For a more complete understanding of my invention reference may be had to the accompanying [drawing] *drawings* illustrating a preferred embodiment of the invention in which like reference characters refer to like parts throughout the several views, and in which:

FIG. 1 is a fragmentary view of the preferred elements of the drive of an internal combustion engine with parts removed for purposes of clarity;

FIG. 2 is a cross-sectional view as seen from line 2—2 of FIG. 1;

FIG. 3 is an alternative embodiment of the present invention and is illustrated as a driving engagement between a driving member and a driven member and with parts shown in section;

FIG. 4 is a sectional view as seen from line 4—4 of FIG. 3;

FIG. 5 is a view of a selectively displaced valve with parts shown schematically;

FIG. 6 is a view similar to FIG. 1 but illustrating another embodiment of the invention; and

FIG. 7 is a cross-sectional view as seen from line 7—7 of FIG. 6.

Referring to the drawings, in FIG. 1 a crankshaft **10** of an engine is shown as drivingly connected to a coupling **12** and having its output through an intermediate shaft **14** provided with a gear **16** meshed with a gear **18** carried by a driven output shaft **20** adapted in the present case for driving an aircraft propeller. The crankshaft **10** is provided on diametrically oppposite sides with a pair of arms **22** which have their ends disposed to extend in a common plane of rotation substantially normal to and radially extending from the axis A of the crankshaft **10**. As can be seen in FIG. 2, the ends of the arms **22** each have oppositely facing abutment ends **24**.

The end of the shaft **14** is provided with a radial flange **26** (FIG. 1) on diametrically opposite sides of which are mounted, by any means such as bolts **28**, a pair of spaced arm [member] *members* **30** (FIG. 2) arranged to lie between the [arm] *arms* **22** of the crankshaft and in their plane of rotation. Each arm member **30** has a pair of oppositely extending cylinders **32** having their axes disposed to lie in a plane normal to the axis of rotation of the shaft **14**, which is coaxial with the crankshaft **10**, and having their inner ends connected by means of a cross passage **34** which will be normally blocked by a valve element **36** which is spring-loaded by a spring **38** to urge it into and across the passage **34**. The valve element **36** is disposed in a recess **40** extending radially with respect to the axis A of the shaft **14**, and crankshaft **10**, such that when the engine is operating at speeds above a predetermined value, the valve element **36** will be moved by centrifugal forces radially outwardly against the urging of the spring **38** to thereby open the passage **34** connecting the inner ends of the cylinders **32**. The valve element **36** has a bore **42** therethrough [ot] *to* permit fluid trapped in the spring-carrying portion of the recess **40** to be expelled inwardly into the passage **34** when the valve is moved outwardly against the spring **38**.

Each cylinder **32** carries within it a hollow piston member **44** slidably movable within a cylinder sleeve insert **46**. Each piston member **44** has a closed outer end **47** engaging the abutment end **24** of an adjacent arm [32.] *22*. A piston spring **48** disposed within the cylinder **32** and behind the piston **44** abuts the inner end of the cylinder **32** and urges the piston **44** at all times into engagement with the abutment end **24** of the respective arm **22**.

Each member **30** has oil inlet passages **50** opening at the inner ends of the cylinders **32** through simple check valves **52** arranged to prevent fluid from leaving the cylinders **32**. The oil inlet passages **50** are supplied with oil under pressure from any suitable source such as the engine oil system (not shown).

The valve element **36** is designed so that centrifugal forces in the lower rotational speed range are overcome by the springs **38** to thereby close the valves so that all oil in the cylinders **32** will be trapped therein, and the pistons **44** will provide at such times a substantially rigid connection between the crankshaft **10** and the shaft **14**. In this condition, the drive system will have a relatively high natural resonant frequency. It will therefore be apparent, in operation, that when the drive system is rotating at relatively low rotational speeds and the natural frequency of the system is relatively high, resonant vibrations will not occur.

The valve element **36** is of such a mass that it will move outwardly under centrifugal force only when the crankshaft rotational speed increases to some selected value above the aforesaid relatively low rotational speed. As the [value] *valve* element **36** moves outwardly to open the passage **34**, oil will not be trapped within the cylinders **32** but will be permitted to flow from one cylinder **32** to the other and the pistons **44** will therefore resiliently contact the arm ends **24** to provide a resilient engagement between the crankshaft **10** and the shaft **14**. It will therefore be seen that at relatively high rotational speeds, the coupling not only provides a resilient engagement between the crankshaft **10** and the shaft **14** but in addition *the* elasticity of this system has changed so that the drive system now has a relatively low natural frequency of vibration. By providing a relatively low natural frequency at relatively high rotational speeds, high resonant frequencies and their resultant destructive vibrations are avoided. The relative stiffness of the springs **43** may be selected to provide any desired difference between the two relative natural frequencies; that is, the stiffer the spring, the less the difference between the relatively low and high natural frequencies. The mass of the valve **36** and the stiffness of its spring **38** will be selected so that centrifugal forces will act to open the valve at a speed range intermediate those at which the natural resonant frequencies would cause harmonic vibration in the system.

The piston springs **48** are preferably also of a suffiicent stiffness so that when the pistons **44** are unlocked and springs **48** are operative, the springs not only provide a resilient engagement, but in addition serve to damp and absorb other minor vibrations that might tend to build up in the system.

With this construction, it is possible for the engine to operate at different speed ranges without ever having to pass through a speed at which resonant frequencies could produce destructive vibrations in the system. This improved system replaces the heretofore used pendulum dampers and the like, resulting in a much less expensive engine having much less weight than was heretofore possible and providing smoother operational characteristics, particularly with regard to small engines.

It will be seen that when the engine is operating below a selected speed, the drive system has a relatively high natural frequency which is accomplished by having the valve element **36** closed, locking the pistons **44**, and making the system stiff. This thereby eliminates any low speed resonant frequencies. When the engine is operating above the selected speed, the system has a relatively low natural frequency which is accomplished by having the valve element **36** open, unblocking the passage **34**-between the cylinders **32** to thereby provide a resilient system having a relatively low natural frequency and eliminating any high speed resonant frequencies.

FIGS. 3 and 4 illustrate an alternate embodiment of the present invention wherein a rotating drive shaft **100** is

drivingly connected to a driven shaft **102** by a coupling generally indicated by the reference numeral **104**. The end of the drive shaft **100** is provided with a circumferential flange **106** which carries a radially extending arm member **108** by means such as bolts **110**. The arm member **108** has a pair of oppositely extending cylinders **112** with their axes lying in a plane extending normal to the axis of rotation A of drive shaft **100**. The inner ends of the cylinders, are connected by a cross passage **114** normally blocked by a valve element **116** which is spring-loaded by a spring **118** to urge it into and across the passage **114**. The valve element **116** is disposed in a recess **120** extending radially with respect to the axis A of the shaft **100**. The valve element **116** is adapted to move outwardly under the influence of centrifugal forces when the driving shaft **100** is rotating at speeds above a predetermined value. The centrifugal forces created are sufficient to overcome the urging of the spring **118** thereby opening the passage **114** connecting the inner ends of the cylinders **112**. The valve **116** has a bore **122** therethrough to permit fluid trapped in the spring carrying portion of the recess **120** to be expelled inwardly into the passage **114** when the valve moves outwardly against the spring **118**.

Each cylinder **112** carries with in [in] *it* a hollow piston member **124** movable slidably within a cylinder sleeve insert **126**. Each piston **124** has a closed outer end **128** which abuts the end **130** of an arm **132**.

The arm **132** is fixed preferably by means of bolts **136** to a radial flange **138** provided on the end of the driven shaft **102**. Thhe abutment ends of the arm **132** are disposed in the plane of rotation of the piston carrying arm **108**, which plane extends substantially normal to and radially from the axis of the driven shaft **102** which is coaxial with the axis A of the shaft **100**.

The arm **132** is provided with preferably three spaced rectangular apertures **140**, each of which carries a coil spring member **142**. The springs are seated in the apertures **140** such that they present opposite abutment ends **144** which project from opposite surfaces of the arm **132**.

A radially extending arm **146** is fixed to the circumferential flange **106** of the drive shaft **100** by bolts **148** and is provided with an aperture **150** corresponding to each of the springs **142**.

A retainer member **152** having an aperture **154** associated with each of the springs **142** is engaged with the springs on the side of the arm **132** opposite to the side associated with the arm **146**. The retainer member **152** is fixed to the arm **146** by bolts **156**.

The valve element **116** is designed to function in a manner similar to the valve **36** in the aforementioned embodiment; i.e. it is closed in the lower rotational speed range so that oil in the cylinders **112** is trapped therein and the pistons **124** provide a rigid engagement between the drive shaft **100** and the driven shaft **102**. With the pistons in the locked condition, the drive system has a relatively high natural frequency.

When the drive shaft rotates at a speed higher than the predetermined value, centrifugal force urges the valve **116** outwardly against the spring **118** to open the passage **114** so that the oil is permitted to flow from one cylinder **112** to the other. The arm **146** and the retainer member **152** then actively engage the springs **142** to assist in providing a resilient engagement between the shaft **100** and the shaft **102**. The springs **142** are chosen of a stiffness sufficient to absorb minor harmonic oscillation and to cooperate with the piston springs **134** to provide the drive system with a relatively low natural frequency of vibration with respect to the high rotational speed.

In some cases it may be preferred or desirable to provide a valve **160** in the arm member **108** as shown in FIG. *5*, and which is connected by a passage **162** to a source of controlled pressurized fluid **164**. The valve **160** would be selectively moved across the passage **114** to control the rate of flow of fluid between the cylinders **112**. To move

the valve **160** radially inwardly and across the passage **114**, fluid is delivered through passage **162** to the recess **120** behind the valve. As the valve **160** moves inwardly, it displaces a certain amount of fluid which would be returned by a passage **163** communicating the inner end of the cylinders **112** with the source of controlled fluid **164**. To move the valve **160** radially outwardly, the fluid flow in passages **162** and **163** would be reversed and this in combination with the centrifugal force inherently produced upon rotation of the arm member **108** which permits the fluid pressure to get behind the valve **60** causes the valve **60** to be moved to its radially outermost position.

It is to be understood that the embodiment shown in FIG. 5 may be designed to be responsive to a function of the rotational speed of the driving member **100** and may be adapted to provide a selective opening in passage **114** for fluid flow associated with selective speeds. Thus there would be a different opening for different speeds, thereby providing controlled damping through the complete speed range.

It is apparent that although [we] *I* have shown the arm **22** being carried by the crankshaft **10**, the coupling **12** could be reversed so that the contact arms are carried by the intermediate shaft **14** and the cylinder carrying flange connected to the crankshaft **10**. This configuration would have the same functional characteristics as the system heretofore described and in addition will provide the crankshaft with a uniform flange and also some additional mass to the crankshaft which may be desirable.

Furthermore, the two arms **22** which require special machining will be on the intermediate gear carrying shaft **14** which is a smaller part.

It has been mentioned that the stiffer the springs are that provide the relatively low resonant frequency, the smaller that gap between the two relative natural resonant frequencies which are selected in the system.

However, where a very small gap is desired, or where even the relatively low natural frequency selected or desired is still on a high order, or where it is desired to have only a small degree of resiliency in the higher speed-low resonance range, other means than the springs may be employed.

FIGS. 6 and 7 illustrate such a preferred embodiment in which a crankshaft **210** is provided with an internally splined hollow end **212** having a preferably circular flange **214** to which are secured arms **216** by any means such as bolts **218**.

The intermediate shaft **220** in this case is hollow and internally splined as at **222** to connect with one splined end of a torsion quill shaft **224**. The other splined end **226** of the quill shaft **224** is engaged in the splined end of the crankshaft **210**.

The other end of the shaft **220** is provided with [integrally] *integral* radially extending arms **228** each having a pair of abutments **230** similar to those in the embodiment FIGS. 1 and 2.

The arms **228** each have two cylinders **232** in which are carried pistons **234** engaging the abutments **230** similarly to the embodiment of FIGS. 1 and 2. Light-weight springs **236** may be used to insure abutting contact.

A spring-loaded, centrifugal force responsive valve element **238** is provided to responsively open and close the passage **240** connecting the fluid-filled interiors of the cylinders **232** as in the embodiment of FIGS. 1 and 2.

In this device, when the valve **238** is closed relatively low speeds, the crankshaft **210** is connected [rigidly] with the shaft **220** through the pistons **234** to impart a relatively high natural resonance frequency to the system as in the previously described device, but when the valve **238** opens under influence of centrifugal force at relatively higher speeds, driving connection between the shafts **210** and **220** is through the relatively flexible quill shaft **224**, giving to the system a relatively lower natural resonance frequency comparable to that which would be comparable to very stiff springs used in the embodiments of FIGS. 1 through 5.

The diameter and length, as well as the material, of the quill shaft **224** may readily be chosen to provide the natural resonance frequency desired.

It is also noted that the passage **240** in the present device may be sized to provide a more or less restricted orifice connection between the fluid-filled cylinders **232** which will act to damp out other minor vibrations, and the valve **238** itself may have therethrough a restricted orifice to permit some flow even when the valve **238** is closed, thereby providing damping through the entire range of engine operation. This type of vibration damping is also applicable to the other disclosed embodiments.

A further feature which may be incorporated into the present devices may be the use of a valve which acts over, for example, a 200 r.p.m. range between its closed and open positions to provide restricted orifice damping of fourth order vibration periods.

I claim:

1. In a drive system for engines including a rotating driving member and a rotating driven member,

(a) a torsion quill shaft drivingly connecting said rotating members and constructed to provide said drive system with a first selected natural resonance frequency;

(b) a selectively operative hydraulic cylinder-piston assembly drivingly connecting said rotating members and constructed when operative to provide said drive system with a second selected natural resonance frequency, and

(c) means selectively making said cylinder-piston assembly operative.

2. The invention as defined in claim **1** wherein said last mentioned means includes an actuator therefor automatically operative in response to a selected variation of speed of said rotating members.

3. In a drive system for engines including a rotating driving member and a rotating driven member,

(a) means providing a driving engagement between said driving member and said driver *member* [members], said means having a first operative condition wherein said drive system has a relatively high natural frequency and a second operative condition wherein said drive system has a relatively low natural frequency,

(b) means operative in relation to the rotational speed of said driving member for making said engagement effective in the first operative condition at rotational speeds lower than those in which said high natural frequency is effective and making said engagement effective in the second operative condition at rotational speeds higher than those in which said low natural frequency is effective so that said driving member never operates at a speed which can produce resonant frequency vibrations in said drive system,

(c) said driving engagement producing means comprising a cylinder carried by one of said rotating members and carrying a piston slidably therein, abutment means carried by the other of said rotating members and drivingly engaging said piston, means selectively varying admission of fluid behind said piston to vary the rigidity of the driving engagement with said abutment means, and

(d) said driving engagement means further comprising a torsion quill shaft member drivingly connecting said rotating members and effective to provide a resilient drive therebetween when the rigidity of driving engagement between the piston and abutment means decreases to a selected value and to vary at such time the natural resonance frequency of said drive system.

4. In a drive system for engines including a rotating driving member driven by the engine and a rotating driven member connected to a shaft and rotating therewith,

(a) means coupling said driving member and said driven member to transmit power from the engine to said shaft,

(b) said coupling means comprising a first *connecting* means *including a hydraulic cylinder-piston assembly which when operative connects* [rigidly connecting] said driving member to said driven member in a manner which provides said drive system with a first selected natural resonance frequency,

(c) said coupling means further comprising a second *connecting* means resiliently connecting said driving member and said driven member and when operative providing said drive system with a second selected natural resonance frequency, and

(d) means changing said coupling means from said first connecting means to said second connecting means.

5. The invention as defined in claim 4, and in which

(a) one of said rotating members has [a] *said* cylinder rigidly connected to the end of said rotating member, said cylinder having an open end adjacent an abutment member of the second rotating structure;

(b) said [coupling means comprises a] piston *being* slidable in said cylinder and with one end contacting said abutment member; and

(c) means for trapping a fluid in said cylinder behind said piston and effective to cause a rigid engagement between said piston and said abutment member at said lower speeds.

6. The drive system as defined in claim 4, and in which said last mentioned means comprises an actuator therefor automatically operable to change said coupling means from said first connecting means to said second connecting means in response to a selected variation in the speed of said rotating members.

7. The invention as defined in claim 4, wherein said coupling means includes,

(a) at least one arm rigidly connected to one of said rotating members, said arm extending radially and normally to the axis of said rotating member,

(b) a pair of spaced arms rigidly connected to the second of said rotating members and disposed in the plane of rotation of said first member arm and adjacent opposite sides thereof, and

(c) [members] *said cylinder-piston assembly* disposed intermediate said adjacent arms and adapted to provide a rigid engagement between said arms when said first connecting means is operative and a resilient engagement between said adjacent arms when said second connecting means is operative.

8. The drive system as defined in claim 4, and in which said coupling means further comprises,

(a) at least one arm rigidly connected to one of said rotating members, said arm extending radially and normally to the axis of said rotating member,

(b) a pair of cylinders having open ends and connected adjacent opposite sides of said arm,

(c) a piston slidably carried in each of said cylinders and spring means resiliently urging said piston toward said arms,

(d) a pair of spaced arms rigidly connected to the second of said rotating members and disposed in the plane of rotation of said pistons and each of said spaced arms contacting the exposed end of at least one of said pistons, and

(e) said first connecting means including means for simultaneously trapping fluid in said cylinders behind said pistons for causing said pistons to rigidly engage the adjacent driving member arms at said lower speeds and said second connecting means comprising means relieving said fluid to cause said pistons to be moved by said spring means into contact with the adjacent driving member arms.

9. The drive system as defined in claim 4, and in which said coupling means comprises,

(a) at least one arm rigidly connected to one of said rotating members, said arm extending radially to the axis of said rotating members,

(b) said arm having a pair of relatively oppositely facing cylinders,

(c) a piston slidably carried in each of said cylinders and spring means resiliently urging said piston outwardly,

(d) arm members carried by the second of said rotating members, said arm members disposed in the path of rotation of said pistons and adapted to rotate with said pistons, and

(e) said first connecting means including means for simultaneously tripping fluid in said cylinders behind said pistons for causing said pistons to rigidly engage the adjacent rotating member arm, and said second connecting means including means relieving said fluid to cause said pistons to be moved by said spring members to produce resilient engagement of said pistons and said adjacent rotating arm members.

10. The invention as defined in claim 9, wherein said last mentioned means comprises valve means operable to open and close communication between said cylinders behind said pistons.

11. The invention as defined in claim 9, wherein:

(a) said cylinder carrying arm has a passage connecting said cylinders behind said pistons; and

(*b*) [(d)] said last mentioned means comprises a valve operative to block and to permit fluid flow through said passage between said cylinders.

12. The invention as defined in claim 11 and which spring means are disposed in said cylinders behind said pistons, said spring means providing resilient support for said pistons when said fluid passage is open.

13. The invention as defined in claim 11, wherein said valve comprises a piston element having means urging the piston element into said passage to block flow through same and operable to unblock said passage in response to a predetermined increase in driving member speed.

14. The invention as defined in claim 13, wherein said piston element is movable in a direction radial with respect to said rotating member axis whereby centrifugal forces of rotation will actuate said piston element in opposition to said urging means.

15. The invention as defined in claim 9, wherein

(a) said cylinder carrying arm has a passage connecting said cylinders behind said pistons; and

(b) said last mentioned means comprises a valve operative to throttle fluid flow through said passage between said cylinders.

16. The invention as defined in claim 15, wherein said last mentioned means comprises a valve element having means responsive to the rotation speed of said driving member for urging said valve element into said passage to throttle and unblock fluid flow through said passage between said cylinders.

17. The invention as defined in claim 16, wherein said urging means comprises a source of controlled fluid pressure communicating with opposite ends of said valve element and operative to dispose one end of said valve element in said passage.

18. The drive system as defined in claim 4, in which said coupling means includes,

(a) at least one arm member rigidly connected to one of said rotating members, said arm extending radially and normally to the axis of said rotating member,

(b) at least one arm rigidly connected to the second of said rotating members and disposed in the plane of rotation of said first arm member and adjacent opposite sides thereof, and

(c) [means] *said cylinder-piston assembly* disposed intermediate said adjacent arms and operative to provide a rigid connection between said adjacent arms to provide said first connecting means and a resilient engagement between said adjacent arms to provide said second connecting means.

19. The drive system as defined in claim **4**, and in which said coupling means comprises,

(a) at least one arm rigidly connected to one of said rotating members, said arm extending radially to the axis of said rotating member,

(b) said arm having a pair of relatively oppositely facing cylinders,

(c) a piston slidably carried in each of said cylinders,

(d) said arm having a passage connecting said cylinders behind said pistons,

(e) an arm member carried by the second of said rotating member, said arm members disposed in the path of rotation of said pistons and adapted to rotate in combination with said pistons,

(f) means resiliently urging said pistons into engagement with said arm members,

(g) said first connecting means including means for trapping fluid in said cylinders behind said pistons for causing said pistons to rigidly engage the adjacent rotating arm members, and said second connecting means including means relieving said fluid to cause said spring means to urge said pistons into resilient engagement with the adjacent rotating member arms.

20. The drive system as defined in claim **4**, and in which said coupling means comprises,

(a) a cylinder carried by one of said rotating members and carrying a piston slidably therein,

(b) abutment means carried by the other of said rotating members and drivingly engaging said piston,

(c) spring means resiliently urging said piston into engagement with said abutment means, and

(d) means for varying admission of fluid behind said piston to vary the rigidity of the driving engagement with said abutment means.

21. The invention as defined in claim **20** wherein said means varying fluid admission is operative to release fluid pressure behind said piston and the force of said spring means determines the degree of resilient driving connection between said piston and said abutment means.

22. In a drive system for engines including a rotating driving member driven by the engine and a rotating driven member connected to a shaft and rotating therewith,

(a) means coupling said driving member and said driven member to transmit power from the engine to said shaft,

(b) said coupling means comprising a hydraulic cylinder-piston assembly operable in a first operative position to rigidly connect said driving member to said driven member in a manner which provides the drive system with a first selected natural resonance frequency and including a spring means providing a resilient connection between said driving member and said driven member through said cylinder-piston assembly and when operative providing said drive system with a second selected natural resonance frequency, and

(c) means operable to render said spring means inoperative.

References Cited

The following references, cited by the Examiner, are of record in the patented file of this patent or the original patent.

UNITED STATES PATENTS

1,965,742	7/1934	Junkers	64—1
1,751,496	3/1930	Sandner	74—574 X
1,865,116	6/1932	Lee	74—604
1,872,763	8/1932	Lee	74—604
2,248,791	7/1941	Taylor	74—604
2,277,186	3/1942	Thege	74—604
2,346,432	4/1944	Heintz	74—574 X
2,367,709	1/1945	Arkus-Duntov et al.	74—574
3,296,887	1/1967	Larsen	74—574
3,528,265	9/1970	Brinson	64—26

FOREIGN PATENTS

925,325	5/1963	Great Britain	74—574

BENJAMIN W. WYCHE, Primary Examiner

R. HEALD, Assistant Examiner

U.S. Cl. X.R.

64—1 C, 1 V, 27 C; 74—604, 574

UNITED STATES PATENT OFFICE
CERTIFICATE OF CORRECTION

Patent No. Re. 27,996 Dated April 30, 1974

Inventor(s) W. A. Wiseman

It is certified that error appears in the above-identified patent and that said Letters Patent are hereby corrected as shown below:

Col. 3, line 38, delete "43" and insert --48--;
line 45, delete "vibration" and insert --vibrations--.

Col. 4, line 30, delete "Thhe" and insert --The--.

Col. 5, line 66, after "closed", insert --at--.

Col. 6, line 42, delete "driver" and insert --driven--.

Col. 8, line 18, delete "tripping" and insert --trapping--.

Col. 9, line 18, delete "member" and insert --members--;
line 18, delete "members" and insert --member--.

Signed and sealed this 17th day of September 1974.

(SEAL)
Attest:

McCOY M. GIBSON JR.
Attesting Officer

C. MARSHALL DANN
Commissioner of Patents

FORM PO-1050 (10-69)

USCOMM-DC 60376-P69
* U.S. GOVERNMENT PRINTING OFFICE : 1969 O—366-334