Sept. 3, 1968 E. L. ALLEN ETAL 3,399,736

POWER-OPERATED TOOL HAVING POSITIONING MEANS

Filed April 14, 1966 2 Sheets-Sheet 1

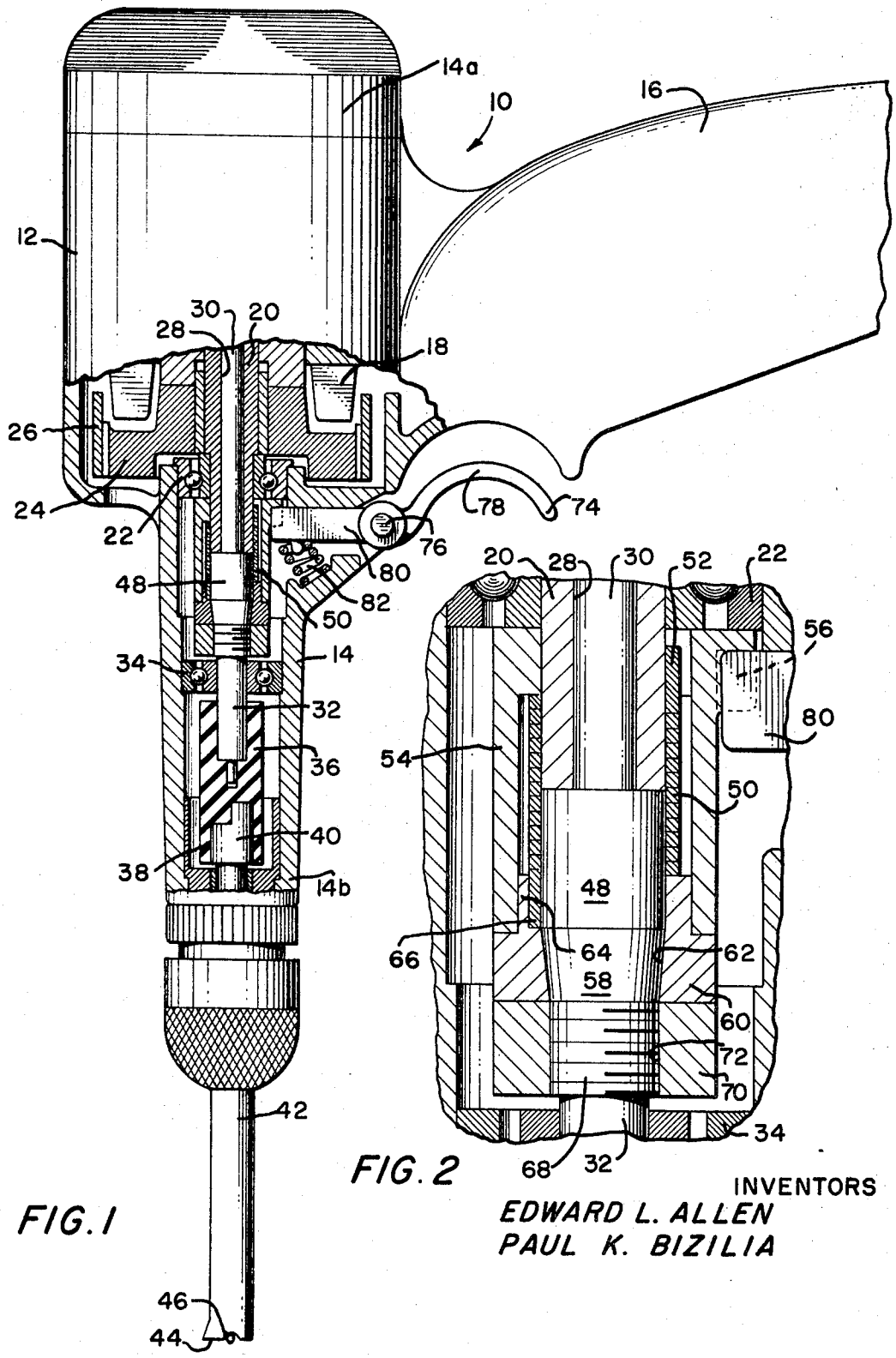

FIG. 1

FIG. 2

INVENTORS
EDWARD L. ALLEN
PAUL K. BIZILIA

POWER-OPERATED TOOL HAVING POSITIONING MEANS

Filed April 14, 1966 2 Sheets-Sheet 2

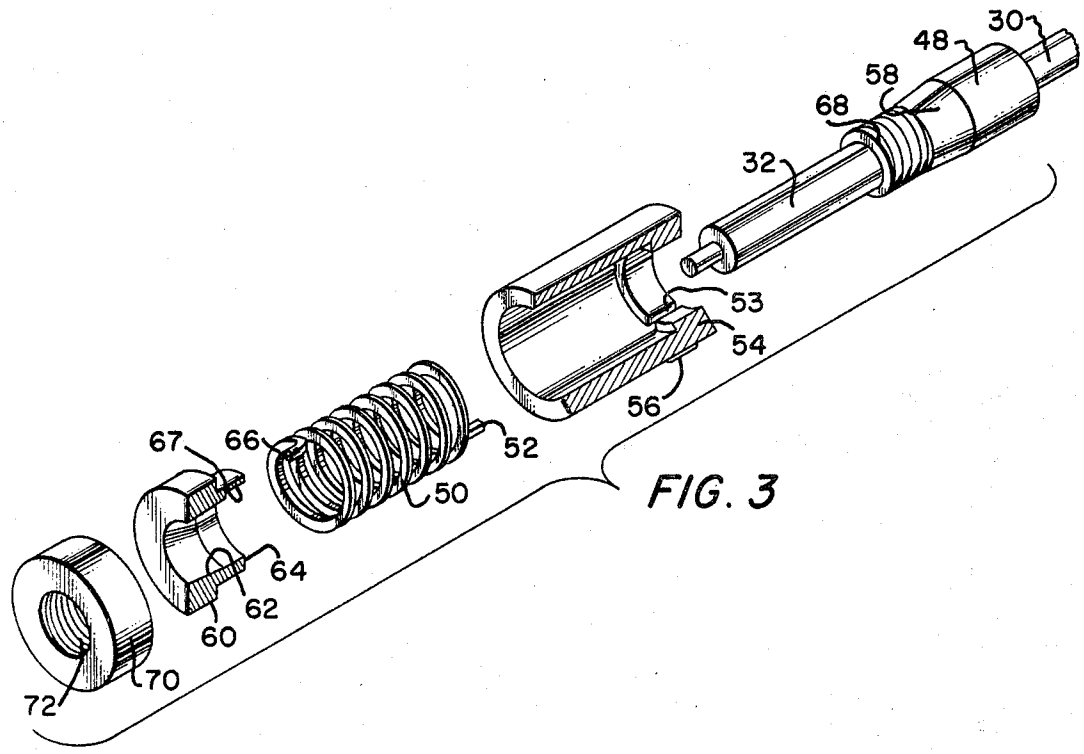

FIG. 3

INVENTORS
EDWARD L. ALLEN
PAUL K. BIZILIA

United States Patent Office

3,399,736
Patented Sept. 3, 1968

3,399,736

POWER-OPERATED TOOL HAVING POSITIONING MEANS

Edward L. Allen, Athens, and Paul K. Bizilia, Sayre, Pa., assignors to Ingersoll-Rand Company, New York, N.Y., a corporation of New York

Filed Apr. 14, 1966, Ser. No. 542,613
6 Claims. (Cl. 173—163)

ABSTRACT OF THE DISCLOSURE

A wire wrapping tool powered by an electrical induction motor the torque of which is supplemented by a band weight on the tool fan. The tool includes driving and driven shafts connected by a helical spring which normally transmits rotation between such shafts, and also comprises a control element operable for interrupting the transmission of rotation through the spring whereby the latter returns the driven shaft to a predetermined angular position.

This invention relates to power-operated tools and has more particular reference to power-operated tools, such as wire wrapping tools, which are operated intermittently.

The operation of a power-operated tool is frequently of an intermittent character as such tools are usually engaged successively with different pieces of work. It is often desirable that the work engaging member of such a tool be disposed in a similar position each time that it engages a piece of work. This is particularly necessary in the operation of wire wrapping tools as such tools generally require a wire end to be inserted into an opening formed in a bit or similar work engaging member. The positioning of this opening in a similar, definite position after each operation of a wire wrapping tool avoids the necessity that the tool operator search for the opening after each operation of the tool and provides economies in operating time and expense.

An object of the present invention is to provide a power-operated tool, such as a wire wrapping tool, wherein a new and improved means is provided for returning the work engaging member of the tool to a similar, definite position after each operation of the tool.

Another object of the invention is to provide a power-operated tool including a new and improved means of the type set forth which, although readily adjustable to vary the position to which the work engaging member of the tool is returned, is relatively simple and economical in both construction and operation.

These objects, and other objects and advantages of the invention which will be apparent from the following description taken in connection with the accompanying drawings, are obtained by the provision, in a power-operated tool, of a driving means and a driving element connected to the driving means to be rotated by the driving means. A driven element, adapted for rotatably driving a working implement, is rotatably disposed adjacent the driving element. A spring is arranged such that one of its ends is in frictional engagement with the the drawing element and the other of its ends is in frictional engagement with the driven element whereby, during rotation of the driving element, it transmits rotation from the driving element to the driven element; and a control means is connectible to the end of the spring in frictional engagement with the driving element for interrupting

the transmission of rotation from the driving element to the driven element through the spring. In addition, the tool is preferably powered by an electrical induction motor the torque of which is supplemented by a flywheel.

Referring to the drawings:

FIG. 1 is a view, partially broken away and in section, of a wire wrapping tool including an embodiment of the invention;

FIG. 2 is an enlarged, fragmentary view of the wire wrapping tool illustrated in FIG. 1; and

FIG. 3 is a fragmentary, exploded view of the wire wrapping tool illustrated in FIG. 1.

Referring more particularly to the drawings wherein similar reference characters designate corresponding parts throughout the several views, FIG. 1 illustrates a wire wrapping tool designated generally as **10** which comprises a casing or housing **12** formed from a plastic or similar light-weight material and including an elongated barrel **14** and a depending handle **16**. The wire wrapping tool **10** is powered by a capacitor start, capacitor run, induction motor **18** which is carried by the rearward end **14***a* of the barrel **14**. The induction motor **18** is connected to a conventional source (not shown) of alternating electrical current by suitable electrical leads (not shown) which extend through the handle **16**.

A motor shaft or driving element **20** is operatively connected to the induction motor **18** to be rotated thereby and extends axially from the induction motor **18** towards the forward or working end **14***b* of the barrel **14**. The motor shaft **20** is rotatably journalled in a plurality of ball type bearings which are carried by the barrel **14**, one of such bearings being shown as **22** in FIGS. 1 and 2. The motor shaft **20** fixedly carries a fan **24** immediately forward of the induction motor **18**, the fan **24** serving to cool the induction motor **18** during the rotation of the motor shaft **20**. The outer periphery of the fan **24** is formed with an integral band weight **26** which, during the operation of the wire wrapping tool **10**, functions as an inertia band to supplement the torque generated by the induction motor **18**.

The motor shaft **20** is formed with an axial bore **28** which longitudinally receives a rearwardly extending, reduced diameter end **30** of an output shaft of driven element **32** in a sufficiently loose fit to permit relative rotation of the motor shaft **20** and the output shaft **32**. The output shaft **32** is rotatably journalled in a ball type bearing **34** and extends from the motor shaft **20** towards the forward end **14***b* of the barrel **14**. The forward end of the output shaft **32** is keyed to a driving jaw member **36** to provide conjoined rotation of the driving jaw member **36** and the output shaft **32** upon the rotation of the output shaft **32**. The driving jaw member **36** is formed from rubber or a similar electrical insulating material and includes a driving jaw **38** at its forward end. The driving jaw **38** engages a driven jaw **40** formed integrally with a rotatably disposed, wire wrapping bit **42** to rotate the bit **42** in response to the rotation of the driving jaw member **36** by the output shaft **32**. The bit **42** projects forwardly of the forward end **14***b* of the barrel **14** and is contoured at its free end **44** to internally receive an electrical terminal or the like (not shown). The bit **42**, furthermore, includes an opening or slot **46** adjacent its free end **44** for receiving the wire (not shown) to be wrapped on the electrical terminal received at its free end **44**.

The output shaft **32** includes an intermediate portion

48, located immediately forward of the motor shaft 20, which is formed with a diameter substantially that of the forward end of the motor shaft 20. A helical spring 50 is arranged such that its opposing ends are wound around the forward end of the motor shaft 20 and the intermediate portion 48 of the output shaft 32 in frictional engagement with the external circumferences thereof. The tang 52 of the helical spring 50 at the rearward end of the helical spring 50 is secured in a slot 53 formed in a freely rotatable sleeve 54 which extends circumferentially around the helical spring 50 throughout the length of the latter. The rearward end of the sleeve 54 is supported by the external circumference of the motor shaft 20, but is freely rotatable relative thereto. The forward end of the sleeve 54 terminates in spaced relationship to the output shaft 32. The external circumference of the rearward end of the sleeve 54, furthermore, carries an integrally formed, depending flange 56 which, as will be hereinafter more specifically described, assists in controlling the return of the bit 42 to a similar, definite position after each operation of the wire wrapping tool 10.

The output shaft 32, includes an intermediate portion 58, located immediately forward of the intermediate portion 48, which tapers inwardly from the intermediate portion 48. A collar 60 having a bore 62 tapered similarly to the tapering of the intermediate portion 58 is keyed to the latter in abutment with the forward end of the sleeve 54. The collar 60 includes an integrally formed flange 64 which projects intermediate the sleeve 54 and the output shaft 32. The tang 66 of the helical spring 50 at the forward end of the helical spring 50 is secured in a slot 67 formed in flange 64.

The output shaft 32 includes an intermediate portion 68, located immediately forward of the intermediate portion 58, which is of a constant diameter and is threaded. A retaining nut 70 having a similarly threaded bore 72 is threaded on the intermediate portion 68 in abutment with the collar 60 and locks the collar 60 in abutment with the forward end of the sleeve 54. As will be seen, however, the unthreading of the retaining nut 70 from the interemdiate portion 68 unlocks the collar 60 sufficiently to permit manual rotation thereof relative to the output shaft 32. Thus, the location of the point of connection of the tang 66 of the helical spring 50 and the flange 64 of the collar 60 relative to the output shaft 32 may be readily and simply adjusted. This adjustment, as will be seen from the following description of the operation of the wire wrapping tool 10, varies the location to which the opening 46 in the bit 42 is returned after each operation of the wire wrapping tool 10.

An actuating lever or trigger 74 is pivotally connected at 76 to the barrel 14. The trigger 74 includes a depending, arcuately contoured grip portion 78 adapted to be received by the hand of the operator of the wire wrapping tool 10, and a locking or flange portion 80 which extends adjacent the sleeve 54. The locking portion 80 is biased by a helical spring 82 towards the sleeve 54 and is suitably diamensioned such that the biasing of the locking portion 80 urges the latter into engagement with the flange 56 on the sleeve 54 to hold the sleeve 54 against rotation. Thus, the locking portion 80 of the trigger 74 locks the sleeve 54 against rotation until the locking portion 80 is pivoted by the operator of the wire wrapping tool 10 against the biasing helical spring 82, and hence, the trigger 74 functions as a control means for controlling the transmission of rotation through the spring 50.

In the operation of the wire wrapping tool 10, the induction motor 18 rotates the motor shaft 20 continuously after the electrical leads of the induction motor 18 have been connected to a suitable source of electrical current. The rotation of the motor shaft 20 is not, however, transmitted to the output shaft 32, with the trigger 74 in its illustrated unpivoted position, due to the engagement of the locking portion 80 of the trigger 74 with the flange 56 on the sleeve 54. Thus, until the operator of the wire wrapping tool 10 depresses the trigger 74, the bit 42 is maintained rotatably stationary.

The operator of the wire wrapping tool 10 inserts the wire to be wrapped into the opening 46 in the bit 42 and locates the free end 44 of the bit 42 around the terminal to receive the wrapped wire. Then, the operator depresses the trigger 74 to pivot the locking portion 80 from the flange 56 on the sleeve 54 and permit rotation of the sleeve 54. With the flange 56 thus freed from the locking portion 80, the rotation of the motor shaft 20 wraps the helical spring 50 around the motor shaft 20 and the output shaft 32 to form a rigid, driving connection therebetween. The rotation thus imparted to the output shaft 32 is transmitted through the driving jaw member 36 to the bit 42 which wraps the held wire around the engaged terminal.

After this wrapping operation, the operator of the wire wrapping tool 10 releases the trigger 74 whereupon the helical spring 82 returns the locking portion 80 to a position adjacent the sleeve 54. Thus, when the rotation of the sleeve 54 moves the flange 56 to its illustrated position, the flange 56 engages the locking portion 80 which prevents its further rotation. As a result, the sleeve 54 is fixedly held against rotation and, as the tang 52 at the rearward end of the helical spring 50 is secured to the sleeve 54, the transmission of rotation through the helical spring 50 is interrupted.

This interruption causes the helical spring 50 to rotate the collar 60 and the output shaft 32 which is keyed by a taper thereto. This rotation of the output shaft 32 rotates the bit 42 to return the opening 46 to the position which it held prior to the before described wire wrapping operation and, thereby, results in the positioning of the opening 46 in a similar definite position after each operation of the wire wrapping tool 10.

Should the operator of the wire wrapping tool 10, however, desired to adjust the position to which the opening 46 is returned, he need merely loosen the retaining nut 70 and manually rotate the collar 60 until the point of connection of the tang 66 of the helical spring 50 to the collar 60 is at a position to provide the desired return of the opening 46. Thus, after the operator has retightened the retaining nut 70, the opening 46 in the bit 42 will be automatically returned to the desired new position after each operation of the wire wrapping tool 10.

Although we have described only one embodiment of our invention in detail, it will be understood that our invention is not limited merely to this disclosed embodiment, but contemplates other embodiments and variations employing the teachings and concepts of the disclosed embodiment.

Having thus described our invention, we claim:

1. In a power-operated tool, the combination comprising:
   - driving means;
   - a driving element connected to said driving means to be rotated thereby;
   - a driven element rotatably disposed adjacent said driving element for rotatably driving a working implement;
   - a spring having one of its ends in frictional engagement with said driving element and the other of its ends connected to said driven element whereby, during rotation of said driving element, it transmits rotation from said driving element to said driven element, said one end including a tang; and
   - control means operatively engageable with said tang for holding said tang in a predetermined position to release said spring from said driving element and cause said spring to return said driven element to a predetermined angular position.

2. A power-operated tool according to claim 1, further comprising the end tang at said other end of said spring being connected whereby it is angularly adjustable to vary its angular position relative to said driven element with the latter stationary.

3. A power-operated tool according to claim 1, further comprising the end tang at said one end of said spring being connected to a member rotatable relative to said driving element, and said control means being engageable with said rotatable member to restrain rotation thereof.

4. A power-operated tool according to claim 3, further comprising the end tang at said other end of said spring being connected to a member secured to said driven element for rotation therewith, and said driven element and said secured member being relatively rotatable to adjust the angular position of said connection of the end tang at said other end relative to said driven element.

5. A power-operated tool according to claim 1, further comprising the end tang at said one end of said spring being connected to a sleeve surrounding said driving element and rotatable relative thereto, and said control means being biased towards said sleeve to engage said sleeve and hold the latter against rotation.

6. A power-operated tool according to claim 5, further comprising said driving means including an electrically operated induction motor.

References Cited

UNITED STATES PATENTS

1,870,646	8/1932	Pitter	192—41
1,985,387	12/1934	Starkey	192—41
2,976,976	3/1961	Parker	192—41 X
3,276,524	10/1966	Falter	173—163

NILE C. BYERS, JR., *Primary Examiner.*