June 23, 1959 R. K. DE FORD, ET AL 2,891,712

CIGARETTE PACKAGE WITH SELF-LOCKING CLOSURE AND BUILT-IN MATCH SUPPLY

Filed March 30, 1956

3 Sheets-Sheet 1

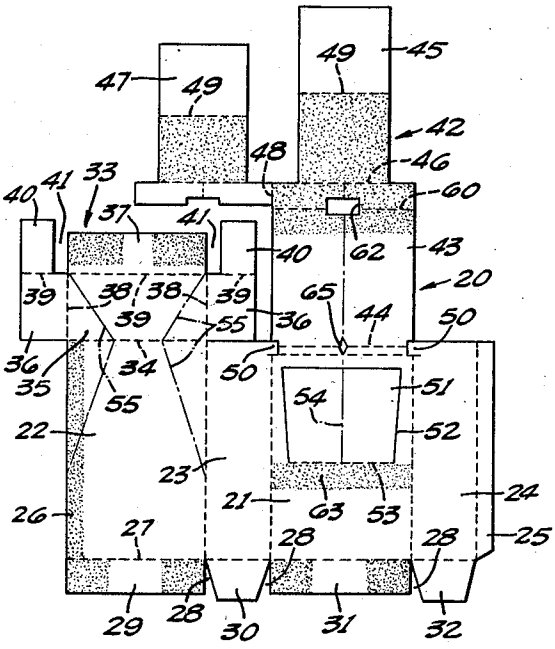

FIG. 1.

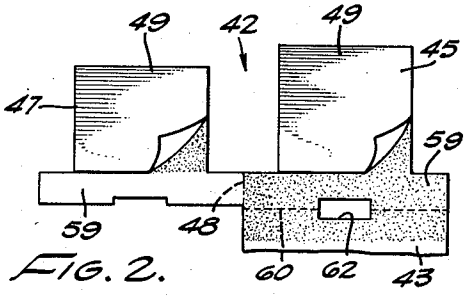

FIG. 2.

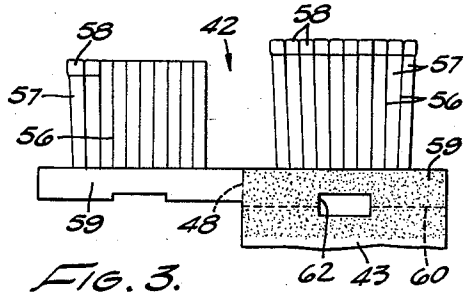

FIG. 3.

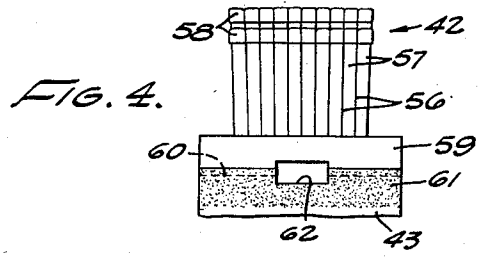

FIG. 4.

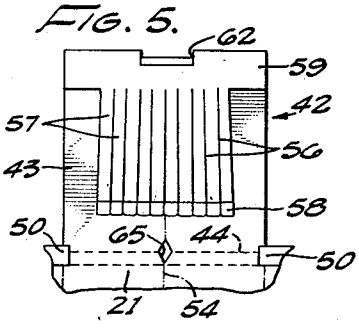

FIG. 5.

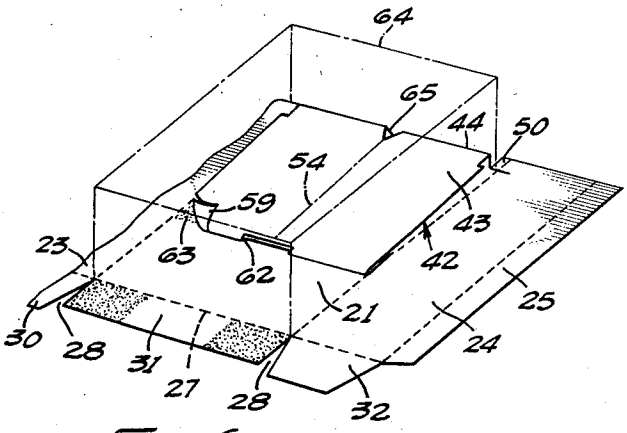

FIG. 6.

INVENTORS
ROBERT K. DEFORD
WILLIAM H. DAY, JR.
BY
W. T. Owen
ATTORNEY

June 23, 1959 R. K. DE FORD, ET AL 2,891,712

CIGARETTE PACKAGE WITH SELF-LOCKING CLOSURE AND BUILT-IN MATCH SUPPLY

Filed March 30, 1956 3 Sheets-Sheet 2

FIG. 7.

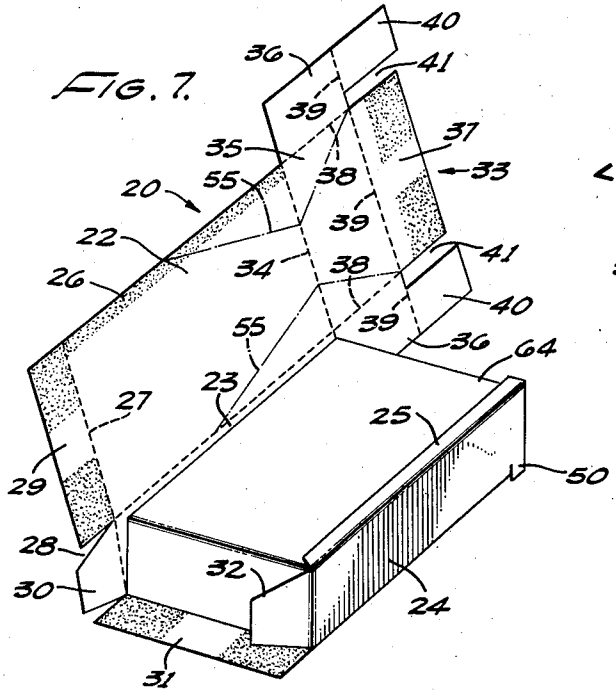

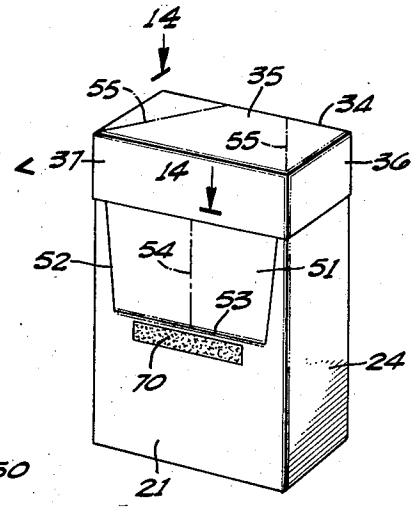

FIG. 10.

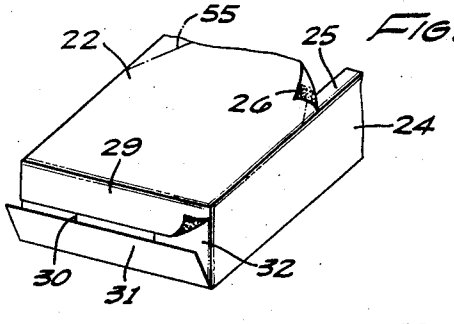

FIG. 8.

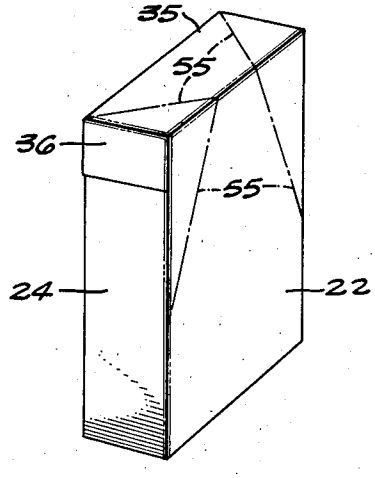

FIG. 11.

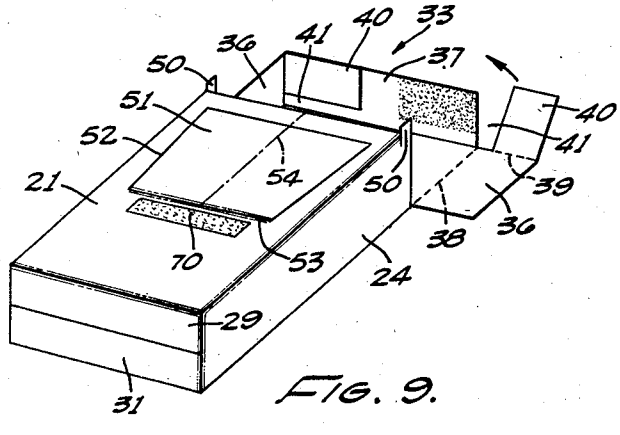

FIG. 9.

INVENTORS
ROBERT K. DEFORD
WILLIAM H. DAY, JR.
BY
ATTORNEY

June 23, 1959 R. K. DE FORD, ET AL 2,891,712

CIGARETTE PACKAGE WITH SELF-LOCKING CLOSURE AND BUILT-IN MATCH SUPPLY

Filed March 30, 1956 3 Sheets-Sheet 3

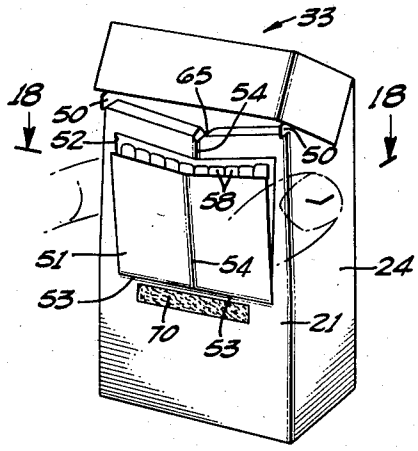

FIG. 12.

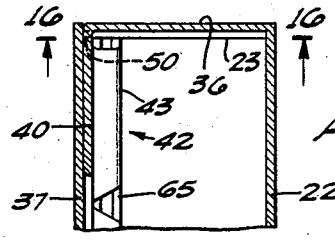

FIG. 14.

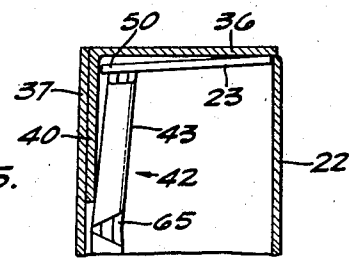

FIG. 15.

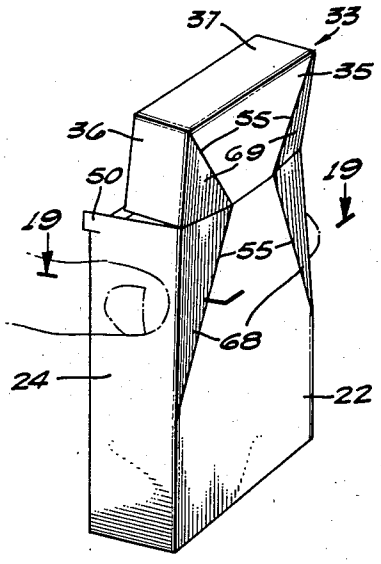

FIG. 13.

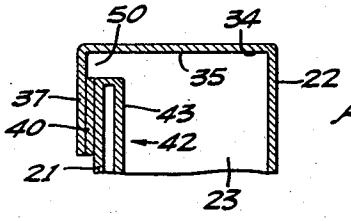

FIG. 16.

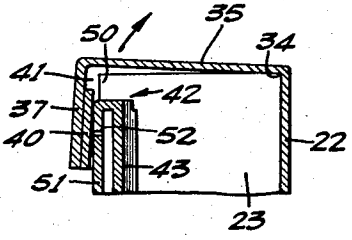

FIG. 17.

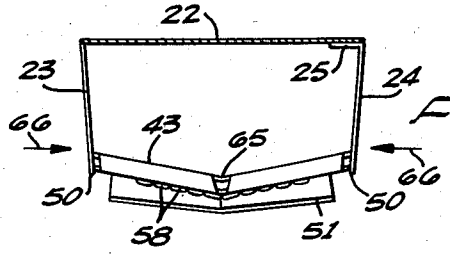

FIG. 18.

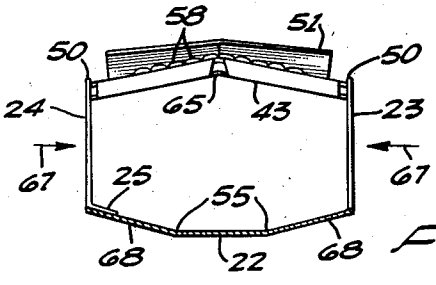

FIG. 19.

INVENTORS
ROBERT K. DEFORD
WILLIAM H. DAY, JR.
BY
ATTORNEY

United States Patent Office 2,891,712
Patented June 23, 1959

2,891,712

CIGARETTE PACKAGE WITH SELF-LOCKING CLOSURE AND BUILT-IN MATCH SUPPLY

Robert K. de Ford, West Covina, and William H. Day, Jr., Tujunga, Calif.; said Day assignor to said de Ford

Application March 30, 1956, Serial No. 575,238

11 Claims. (Cl. 229—44)

This invention relates to paper containers and more particularly to an improved package for cigarettes preferably formed from a single blank of paper and featuring a self-locking closure for the cigarette space and an integral, built-in match supply accessible through a flap in the package side wall.

Numerous prior proposals have been made for packaging cigarettes along with a supply of matches thereby avoiding the need for separate containers for each and safeguarding both the matches and the cigarettes in a common container. However, the many constructions heretofore provided have been subject to one or more serious disadvantages which are obviated by the present invention. For example, certain of the prior designs involve the use of a two-part container including an open-ended shell and a drawer containing the cigarettes and providing access to the cigarettes as the drawer is pulled from one end of the shell. Provision for match storage is made in various ways between the shell and drawer. Among the serious objections to these arrangements are the complexity of the package structures and the high manufacturing costs. Other combination match and cigarette containers provide different modes of storing the matches in a narrow compartment between the inner and outer wrappers of the cigarette package. These arrangements are inconvenient to use because the matches must be removed from the cigarette package to detach a match. Frequently the user neglects to replace the matches in the storage compartment provided in the package thereby defeating the intended benefits of the unitary assembly. Still other proposals involve a shell-and-drawer-type cigarette package having matches mounted on the outer side of the shell and accessible through a flap formed in an exterior wrapping for the entire unit. While presenting certain advantages, this arrangement presents troublesome assembly and packaging problems.

In view of the foregoing factors and conditions characteristic of prior proposals for packaging matches and cigarettes in a combination container, it is a primary object of the present invention to provide a simplified cigarette package formed from a single blank of sheet material and including a match supply integral with the blank.

Another object of the invention is to provide a cigarette package having match bodies formed of the package material and positioned immediately beneath an access flap forming part of the package.

Yet another object of the invention is to provide a cigarette package having a closure cap hinged along one edge of the package and including automatic means for locking the cap closed but releasable upon the application of pressure to areas of the package adjacent the locking means.

A further object of the invention is the provision of a container formed from flexible sheet material having a hinged closure and including means for deforming said hinge in a manner to effect the opening of the closure and its retention in open position so long as the hinge is held deformed.

Still another object of the invention is to provide a cigarette package having adjacent openings in its end and one side wall, together with closures for each hinged to the package walls and a common locking means for holding both in closed position. A related and more specific object is to provide a package having dual closures of the character described and wherein the application of pressure to the package opposite the lateral edges of said closures effects the release of the locking means and the opening of both closures.

Another object of the invention is to provide a one-piece paper blank adapted to be folded to form a cigarette package having match bodies formed from the blank and supported against the inner side of one wall and accessible through a normally closed flap.

These and other more specific objects will appear upon reading the following specification and claims and upon considering in connection therewith the attached drawings to which they relate.

Referring now to the drawings in which a preferred embodiment of the invention is illustrated:

Figure 1 is a plan view of the paper blank from which the cigarette package constituting the present invention is formed when folded along certain crease lines and secured together by gluing or the like;

Figure 2 is a fragmentary view of that portion of the blank used to form the match bodies and showing the upper half of the match body portion folded downwardly against the lower half;

Figure 3 is a view similar to Figure 2 but showing the slits between match bodies and match heads on certain of the bodies;

Figure 4 shows a subsequent step in the manufacture of the match bodies after the layer of shorter matches has been folded to overlie the longer matches;

Figure 5 shows the two layers of matches folded over upon the web employed to support the same against the inner side wall of the completed package;

Figure 6 is a fragmentary view showing an assembly step subsequent to that illustrated int Figure 5 and wherein the match supporting web has been folded through 180 degrees to bring one face of the matches against the inner surface of the front wall;

Figure 7 shows the walls of the blank being folded about a prewrapped packet of cigarettes;

Figure 8 shows the bottom end flaps of the package being folded;

Figure 9 illustrates the assembly of the closure for the package;

Figure 10 is a perspective view of the completed package with the match access flap and closure cap closed;

Figure 11 is a perspective view of the completed package from the rear indicating the position of certain crease lines;

Figure 12 is a perspective view of the completed package showing pressure being applied to the lateral sides of the package to release the common locking means for the match flap and the closure cap;

Figure 13 is a perspective view from the rear as pressure is applied to the lateral sides to hold the closure cap open;

Figure 14 is a fragmentary sectional view taken on line 14—14 of Figure 10;

Figure 15 is a fragmentary sectional view taken on a plane immediately below the inner surface of the closure looking toward the bottom of the package as pressure is applied to the lateral sides of the package to unlock the closure;

Figure 16 is a fragmentary vertical sectional view on a plane closely adjacent an interior side wall of the package

as indicated by line 16—16 on Figure 14, and showing the closure locked in closed position;

Figure 17 is a view similar to Figure 16 but showing the closure in released position;

Figure 18 is a cross-sectional view on line 18—18 of Figure 12 showing the position of the parts as pressure is applied to the lateral sides of the package adjacent the front side wall; and

Figure 19 is a view similar to Figure 18 taken on line 19—19 of Figure 13 showing the position of the parts as pressure is applied to the lateral side walls in an area intermediate the front and rear walls.

Referring to the drawings and particularly to Figure 1, it will be noted that the unitary blank of paper used to form the combination cigarette package and match supply is generally designated 20. In addition to the side wall and bottom end portions for the package proper, blank 20 includes an integral portion generally designated 33 adapted to form a top closure cap, and an irregularly shaped portion generally designated 42 adapted to form a match supply underlying one side wall of the completed package.

The lower half of blank 20, as illustrated in Figure 1, is divided into a plurality of generally rectangular areas by slits and by longitudinally and transversely extending dotted lines. The dotted lines represent crease or fold lines and serve to divide the lower portion of blank 20 into a front wall 21, a rear wall 22, and laterally disposed side walls 23 and 24. Extending along the edge of wall 24 is a tab 25 adapted to be glued to the stippled area 26 along the edge of rear wall 22. Projecting from one end of side walls 21, 22, 23 and 24, as defined by the transversely extending crease line 27, are four flaps 29, 30, 31 and 32. These flaps are adapted to fold into overlapping relationship and to be glued together to form the bottom of the package. Notches 28 between the several flaps are positioned opposite one end of the side wall crease lines and serve to separate the flaps from one another.

The portion of the blank 20 used in forming the closure cap for the top end of the package is generally designated 33 and includes that portion of the blank lying above the transverse crease line 34 at the upper end of rear wall 22. Closure 33 comprises a central rectangular area 35, having a pair of tabs 36 at its ends and a third tab 37 extending from the longer edge thereof which cooperate with one another to form a rim flange along three edges of the closure. It will be noted that a pair of gluing tabs 40 extend above crease line 39 and that rectangular cut-outs 41 separate tabs 40 from the ends of tab 37 and provide recesses for receiving the locking tabs for the closure cap as will be explained presently.

The portion of blank 20 employed in forming the match supply is generally designated 42 and includes that portion of blank 20 connected to front wall 21 by crease line 44. The match forming portion 42 comprises a web 43 hinged to the top edge of front wall 21 along the crease line 44, and two rectangular portions 45 and 47 extending from the free end of web 43. The longer one of the two portions 45 and 47 is employed to form the bodies of relatively long matches and portion 47 is utilized to form the bodies of the shorter matches. Transverse crease lines 49 divide portions 45 and 47 into equal halves so that the upper ends can be folded about the crease line to provide match bodies of double thickness.

Another feature of blank 20 relates to a pair of locking tabs 50, 50 projecting toward one another from the facing corners of the lateral side wall portions 23 and 24. These tabs project slightly beyond the face of the front wall 21 in the assembled package in a position to interlock with one edge of recesses 41 of the closure cap in the assembled condition of the latter. Formed integral with the front wall 21 is a second closure comprising flap 51 formed by an inverted U-shaped slit 52 in blank 20, the

lower ends of slit 52 being connected by a transverse crease 53 providing a hinge for the flap. It will also be observed that a crease line 54 extends centrally through flap 51 and through web 43 of the match supply portion of the blank for a purpose described below.

Still another feature of the blank playing an important function in the rapid opening of the two access covers relates to two pairs of diverging crease lines 55, 55. These lines meet at spaced points along the closure hinge provided by crease line 34 and diverge from one another toward the opposite lateral edges, the closure cap and the rear wall 22.

The manner in which rectangular portions 45 and 47 of the blank are processed to provide an integral match supply will be best understood by reference to Figures 2 through 5. It will be noted that the lower halves of portions 45 and 47 are stippled indicating, as does the stippling in all portions of the blank, that a suitable adhesive is applied to these areas. The top halves of portions 45 and 47, as shown in Figure 1, are folded along their respective crease lines 49 to the position illustrated in Figure 2 providing a portion of double thickness from which the match bodies 57 are formed by parallel slits 56 extending through the creased edge 49. After the match bodies have been fanned apart to separate their free ends, the ends are dipped in any suitable ignitable match head material to form heads 58 on the individual match bodies. After this liquid has set, the shorter strip of matches is folded laterally about crease line 48 to bring its base tab 59 into gluing relation to the corresponding tab 59 at the base of the longer matches, as illustrated in Figure 4. The final assembly step for the match packet is to fold the matches along crease line 60 of web portion 43 so that the forward face of tab 59, as viewed in Figure 4, can be glued against area 63 of the web, as shown in Figure 6. It will be noted that crease line 60 passes through a rectangularly-shaped cut-out 62 located midway between the lateral edges of base portions 59 of the two layers of matches. This cut-out weakens the base portions 59, 59 of the matches somewhat and facilitates the flexing of the matches about crease line 54 as will be explained more fully below.

The manner in which the side walls and the bottom end tabs of the package are folded about a lightly wrapped quantity of cigarettes, generally designated 64, will be readily understood by a consideration of Figures 6 through 9, it being recalled that the stippled areas represent fresh glue. The glue-coated areas are positioned to contact the uncoated exterior surfaces of other parts when folded into overlapping contact with the glue-bearing areas. For example, referring to Figure 7, it will be noted that tabs 30 and 32 projecting beyond the bottom ends of side walls 23 and 24 are folded inwardly against the packet of cigarettes 64, after which tab 31 of the rear wall and tab 29 of the front wall are folded in turn against tabs 30 and 32 to complete the closing and sealing of bottom end of the package. In actual practice, it is to be understood that these folding operations would be performed by any suitable automatic folding machinery.

In like manner, the closure cap 33 is formed by first folding flaps 36 toward one another along the crease lines 38 at either lateral edge of cover portion 35. Tabs 40, 40 are likewise folded about crease line 39 so as to lie at right angles to the inner surfaces of flaps 36. Thereafter the front flap 37 is folded toward tabs 40 about crease line 39 and its glued areas are secured to the exterior faces of tabs 40, in the manner best indicated in Figure 9, thereby completing the assembly of the entire package. The closure may be locked closed by pivoting it against the open end of the package. As the cap closes, locking tabs 50, 50 projecting slightly beyond the face of front wall 21 snap into recesses 41 and lock cap 33 closed as will be best understood by

reference to Figures 12 to 19. When closure 33 is fully closed for example, the locking tabs 50 will be in the position shown in Figure 16, that is, the upper edge of the tab 40 will be positioned beneath the lower edge of tab 50 as the parts are viewed in Figure 16 and closure 33 will be locked against upward pivoting about its hinge 34. Furthermore, the upper edge of match access flap 51 will underlie the lower rim of flap 37 of closure 33 thereby preventing flap 51 from opening outwardly as best illustrated in Figure 17.

To gain access to the package the user grasps the lateral side walls 23 and 24 between the forefinger and thumb of the left-hand as indicated in Figure 12 and applies pressure at a point spaced somewhat below the downturned rim of closure 33. This pressure causes the front wall 21 to bulge outwardly, this action being aided by cut-out 62 at the base end of the match packet, by crease line 54 and by notch 65 across the edge of web 43 of the match packet. The inward flexing of the side walls and the outward bulging of the front wall disengages locking tabs 50 from recesses 41 in the upper forward corners of the closure cap 33, as will be best understood by reference to Figures 15, 16 and 17, and allows the top closure 33 to pivot upwardly about hinge 34. As the lower edge of the front rim 37 of the closure by-passes the underlying rim of the match access flap 51, the latter swings outwardly about the hinge line provided by crease 53, this outward pivoting being aided by the outward bulging of the flap along crease 54 and by the pressure acting on the longitudinal edge of the flap as the user presses side walls 23, 24 toward one another.

In the initial opening operation just described, it will be understood that the pressure is applied to the side walls 23 and 24 closely adjacent front wall 21, as indicated by arrows 66 in Figure 18. Once the locking means has been disengaged, however, the user's fingers may be shifted or rolled sufficiently to bring the pressure point opposite a median plane through the package, as indicated by arrows 67 in Figure 19. This shifting of the pressure points causes the rear wall 22 to bulge outwardly primarily along the pairs of diverging crease lines 55, 55. Referring to Figure 13, it will be noted that the triangular-shaped shaded area 68 adjacent side wall 24 and the similarly-shaped adjacent shaded area 69 in top wall 35 of closure cap 33 will lie in a common plane when the end cap is in its fully open position. Also, the correspondingly shaped and shaded triangular areas 68, 69 along the opposite longitudinal edge of the rear wall will lie in a common plane but inclined with respect to the first described shaded areas along the other edge of the package.

Two important functions are served by the described construction and manner of flexing of the package walls as pressure is applied to side walls 23, 24 in the manner illustrated. The first of these is to cause closure 33 to snap open as the locking tabs 50 are released, and the second is to hold the cover fully opened so long as slight pressure is applied to the opposite side walls 23, 24. This is for the reason that hinging action takes place only about a straight axis. Accordingly, the application of pressure to the side walls in a manner to bulge the rear wall tends to bend the axis of hinge 34 in a direction tending to pivot the closure upwardly. Once the closure has reached its fully opened position, slight pressure on the side walls suffices to hold the rear wall bulged outwardly with the shaded area 68, 69 on one longitudinal edge of the package lying in a common plane but inclined to the pair along the opposite edge. So long as the closure hinge is deformed by the bulging rear wall, closure 33 cannot be closed except by the use of force.

While pressure is maintained against the opposite sides of the package to hold the closures 33 and 51 open, the user withdraws a cigarette through the open top with the right hand and then detaches one of the matches through the match access opening in the front wall of the package. As the pressure is relaxed from the side walls to initiate this closing operation, the flap 51 tends to close as does closure 33. The user makes certain that the flap 51 is substantially closed before depressing closure 33 until locking tabs 50 snap into recesses 41 in the manner described above. The match striking strip 70 not only has a very firm backing but with the closures locked closed, the match can be struck thereon with ease and complete assurance that the reserve supply of matches cannot become ignited as the detached match is ignited. In the manner described above, cigarettes and matches may be removed from the novel combination package provided by this invention and used by the smoker until the supply of both becomes exhausted.

While the particular unitary cigarette package and match facility herein shown and described in detail is fully capable of attaining the objects and providing the advantages hereinbefore stated, it is to be understood that it is merely illustrative of the presently preferred embodiment of the invention and that no limitations are intended to the details of construction or design herein shown other than as defined in the appended claims.

We claim:

1. A paper container having front, rear, side and bottom walls and an open end, closure means for said open end having one edge integral with the adjacent edge of one of said walls, the junction line between said closure and said wall being creased to provide a hinge connection, diverging crease lines meeting at said hinge and extending away from one another toward the lateral edges of said closure and of said one wall to which said closure is hinged, said diverging crease lines being effective as pressure is applied to said container adjacent the opposite ends of said closure to pivot said closure toward open position and to hold the same open while pressure continues to be applied.

2. A paper container as defined in claim 1 characterized in that the wall of said container on the side thereof opposite said closure hinge connection is weakened along a line extending toward the open end of the container and positioned between the lateral edges of said closure and effective to facilitate outward bulging of said side wall as pressure is applied to the container to pivot the closure to open position.

3. A paper container as defined in claim 2 characterized in that a rim edge of said closure and the juxtaposed portion of said container include interengageable detent means operable to hold said closure normally closed across the open end of said container, the outward bulging of the opposed side walls of the container as pressure is applied to pivot the closure to open position being effective to disengage said interengageable detent means.

4. A paper container as defined in claim 1 characterized in that said closure has a flanged rim arranged to embrace the open end of said container when closed, said flanged rim and the juxtaposed edges of said container including detent means operable to lock the closure normally closed, the application of pressure to the walls of said container adjacent the opposite ends of said hinge connection being effective to bulge the adjacent portions of said container walls and to unlock said detent means.

5. A paper container as defined in claim 4 characterized in that said detent means are arranged to re-engage and interlock with one another repeatedly each time said closure is pivoted back to the closed position thereof.

6. A paper package formed from a unitary generally rectangular blank of paper material having crease lines to facilitate folding said blank into a relatively thin rectangular package, said blank having flaps at one longitudinal end thereof folded inwardly at right angles to the walls of the package in overlapping relation and sealed together to form a closed bottom end, said blank having

a pivoting closure for the upper end of said package, said pivoting closure being an integral part of said blank and hinged to an end edge of the package side wall, said closure including downturned rims positioned to lie flush against the front face and the opposite lateral faces of said package when said closure is in closed position, said package having diverging crease lines emanating from spaced points along said closure hinge and extending oppositely from one another to the lateral edges of the back wall of said package and of said closure end wall, said crease lines tending to cause said back wall to bulge outwardly as the upper ends of the package are pressed toward one another and to thereby facilitate the opening of said closure and the holding thereof in open position.

7. A paper package as defined in claim 6 characterized in that the downturned rims of said closure and the juxtaposed wall portions of said package include interlocking detent means operable to hold said closure normally locked closed, said detent means being automatically disengageable to unlock said closure in response to outward bulging of the package walls upon the pressing of the upper ends of the package toward one another to open said closure.

8. A container made from flexible sheet material, said container being of generally tubular shape and having an open end normally closed by a snap-opening cover hinged along one edge to the adjacent edge of the container opening, said cover having a continuous downturned relatively-stiff flange extending along substantially all except the hinged edge thereof, the walls of said cover and of the container wall to which the cover is hinged being weakened along two pairs of converging lines traversing said hinge with the lines of each pair intersecting at said hinge between the ends thereof to facilitate the rapid opening of said cover in response to the application of pressure to the opposed walls of the container at the opposite ends of said hinge thereby causing the axis of said hinge to bulge crosswise of its axis.

9. A container as defined in claim 8 including interengaging tab and detent means carried by juxtaposed portions of said container and of said cover in the closed position of the cover, said tab and detent means being disengageable in response to the application of pressure to said container to bulge said hinge, and the bulging of said hinge being effective to snap said cover to an open position and to hold the cover open so long as pressure is applied to hold said cover hinge bulged.

10. A container as defined in claim 9 wherein said cover has a downturned flange adapted to embrace the rim edges of the open end thereof opposite said hinge, said flange being free of crease lines along the portions thereof opposite said hinge and cooperating with the said rim edges in restraining said hinge against bulging in the closed position of the cover.

11. A container having a snap-opening cover comprising a generally rectangularly shaped container formed from flexible sheet material having stiffness and being closed except across one end, a cover having a downturned flange along three edges and the remaining edge being hinged to the rear wall of said container along one longer edge of the open end thereof, the top wall of said cover having a pair of crease lines converging toward one another and merging at said hinge with a pair of oppositely inclined crease lines formed in the rear wall of said container, said pairs of crease lines being responsive to pressure applied inwardly exteriorly against the narrow ends of the container near the open end thereof to bulge both said rear wall and the top wall of said cover outwardly thereby bulging said hinge out of its normal straight line condition and causing said cover to snap open and to be held open so long as slight pressure remains applied to the narrow ends of said container.

References Cited in the file of this patent

UNITED STATES PATENTS

1,166,079	Richter	Dec. 28, 1915
1,481,161	Tasler	Jan. 15, 1924
2,163,326	Schwartz	June 20, 1939
2,176,912	Luckett	Oct. 24, 1939
2,247,870	Chalmers	July 1, 1941
2,365,739	Williamson	Dec. 26, 1944
2,369,385	Carruth	Feb. 13, 1945
2,447,787	Atkinson	Aug. 24, 1948
2,544,565	Phillips	Mar. 6, 1951
2,717,074	Williamson	Sept. 6, 1955

FOREIGN PATENTS

6,685	Great Britain	1914