July 28, 1970 D. J. HILL 3,521,798

WRIST FRAME

Filed Jan. 12, 1968

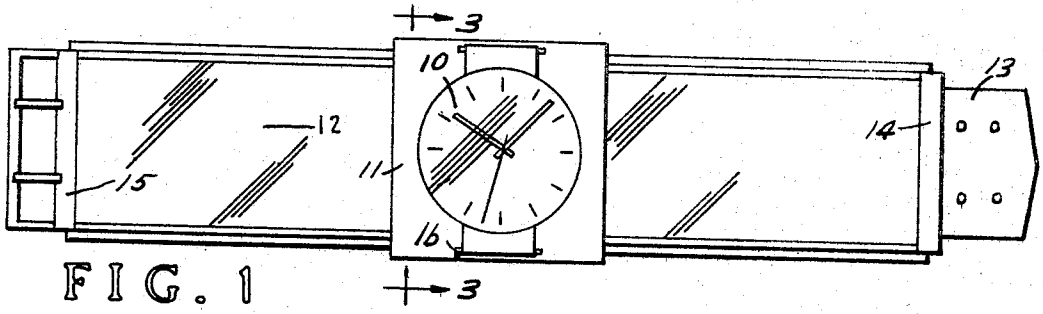

FIG. 1

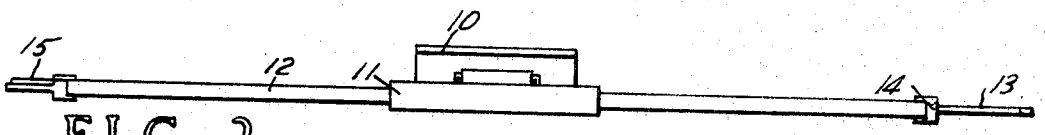

FIG. 2

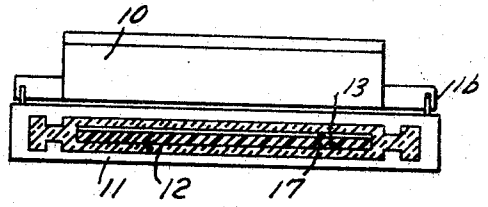

FIG. 3

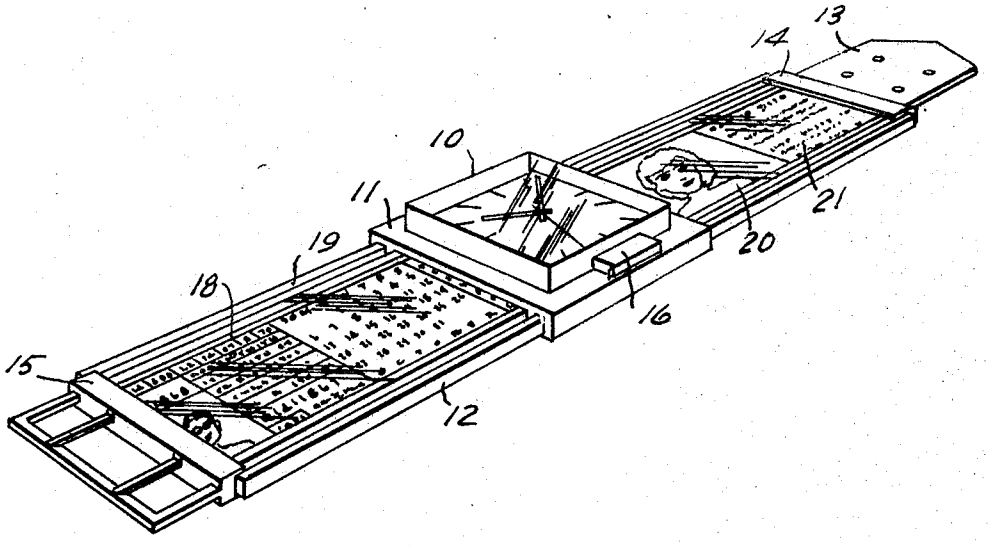

FIG. 4

INVENTOR.

D. James Hill

United States Patent Office

3,521,798
Patented July 28, 1970

3,521,798

WRIST FRAME

Delmer James Hill, Grosse Pointe Woods, Mich.
(3133 Cortland Drive, Vestal, N.Y. 13850)

Filed Jan. 12, 1968, Ser. No. 697,416
Int. Cl. A44c 5/00
U.S. Cl. 224—4 4 Claims

ABSTRACT OF THE DISCLOSURE

A hollow transparent watchband for displaying an insert such as a photograph or the like. A pair of buckle members are mounted on the band's ends to enclose the contents, and are removable to allow replacement of the contents.

This invention relates to wrist bands, more particularly to a watch band that is designed for multi-purpose use, and has for its main object the containment of small scale flat and often referred-to objects in a readily visible manner.

Another object of this invention is to provide the means to allow a choice of watch location on the band.

Another object of this invention is to provide the means to allow multiple instrument installation on the same band.

Another object of this invention is to provide a band of a design that allows its extrusion, thus cutting its cost of manufacture.

These and other objects will be readily evident upon a study of the following specifications and accompanying drawings, showing only one form that this invention might take.

FIG. 1 is a plan view of this invention.

FIG. 2 is a side elevational view.

FIG. 3 is a cross sectional view.

FIG. 4 is a perspective view showing a number of enclosures.

Referring to the drawing in detail, a conventional watch **10** is secured to a sleeve adaptor **11** by attachments **16**, said adaptor sliding on a transparent sleeve **12** into which is inserted a band **13**, said band and sleeve being attached near one end by a slotted U-clip **14** and at the other end by a buckle **15**.

In section is shown a flat enclosure **17** or other similar inserts, the sleeve having sufficient tolerance to snugly receive both band and enclosures.

In perspective is shown several examples of enclosures in the form of a photo-reduced copy of an operator's license **18**, calender **19**, photograph **20** and other often referred-to data such as social security number, addresses, zip codes and phone numbers **21**.

To assemble, enclosures are backed with a temporary adhesive and pressed to the band, which is then inserted

into the transparent sleeve to the buckle. The U-clip buckle back end is clamped. The slotted U-clip is then placed over the other end of the band, slipped along the band until tight over the end of the sleeve, then clamped.

Replacement enclosures are achieved by simply reversing this procedure to dismantle the assembly, then exchanging enclosures and re-assembling the components.

Obviously, the adaptor **11** may be worn in any position on the sleeve **12**, and other instruments may be worn on other adaptors on the same sleeve **12**. Other enclosures may be included under the adaptor in the position illustrated.

While the scale shown is that of a watch band, the size of the described invention may be varied so as to allow its use as a neckband, belt or for other decorative or functional purposes.

I claim:

1. In a bracelet, the combination comprising:
an elongated, substantially transparent sleeve;
a band disposed in said transparent sleeve;
a pair of U-clip adaptors mounted on said band, said adaptors being clamped on opposite ends of said transparent sleeve, one of the adaptors having a slot for receiving the band into the sleeve;
a buckle mounted on one end of said sleeve; and
the band being formed to connect the buckle to the other end of the sleeve.

2. In a bracelet, the combination comprising:
an elongated, substantially transparent sleeve;
a band disposed in said transparent sleeve;
a buckle mounted on one end of said sleeve, and adapted to receive one end of the band to form a connection to the opposite end of said sleeve;
an adaptor sleeve mounted on said transparent sleeve; and
an instrument attached to said adaptor sleeve.

3. The combination as defined in claim **2**, in which the instrument comprises a wrist watch.

4. The combination as defined in claim **2** in which said adaptor sleeve is movable along said transparent sleeve.

References Cited

UNITED STATES PATENTS

2,641,074	6/1953	Richmond.	
2,954,621	10/1960	Mosher et al.	40—19 XR
3,106,028	10/1963	Baumgartner	63—3 XR

FOREIGN PATENTS

402,329	9/1924	Germany.

GERALD M. FORLENZA, Primary Examiner

U.S. Cl. X.R.

40—21; 224—28