US011487016B2

(12) **United States Patent**
Sundaramurthy et al.

(10) **Patent No.: US 11,487,016 B2**
(45) **Date of Patent: Nov. 1, 2022**

(54) **SYSTEMS AND METHODS FOR DISTRIBUTED AVIONICS PROCESSING**

(71) Applicant: **Honeywell International Inc.**, Morris Plains, NJ (US)

(72) Inventors: **Vishwas Sundaramurthy**, Bangalore (IN); **Venkata Lakshmi Siripurapu**, Bangalore (IN); **Vivek Kumar Pandey**, Sultanpur (IN); **Damodara Venkata Hanumantha Rao Desu**, Bangalore (IN); **Prashant Prabhu**, Bangalore (IN); **Manjunath Bhixavatimath**, Bangalore (IN)

(73) Assignee: **Honeywell International Inc.**, Charlotte, NC (US)

(*) Notice: Subject to any disclaimer, the term of this patent is extended or adjusted under 35 U.S.C. 154(b) by 200 days.

(21) Appl. No.: **17/067,276**

(22) Filed: **Oct. 9, 2020**

(65) **Prior Publication Data**

US 2021/0134162 A1 May 6, 2021

(30) **Foreign Application Priority Data**

Oct. 31, 2019 (IN) 201911044179

(51) **Int. Cl.**
G06T 7/70 (2017.01)
B64D 47/08 (2006.01)
(Continued)

(52) **U.S. Cl.**
CPC ***G01S 19/12*** (2013.01); ***B64C 39/02*** (2013.01); ***B64D 43/00*** (2013.01); ***B64D 47/08*** (2013.01);
(Continued)

(58) **Field of Classification Search**
CPC G01S 19/12; G01S 19/485; G01S 19/26; G01S 19/48; G06T 7/70;
(Continued)

(56) **References Cited**

U.S. PATENT DOCUMENTS

9,008,868 B1 4/2015 Bantoft et al.
9,927,807 B1 3/2018 Ganjoo
(Continued)

FOREIGN PATENT DOCUMENTS

KR 10-2019-0048893 A 5/2019
WO 2019/135207 A1 7/2019

OTHER PUBLICATIONS

Extended European Search Report dated Mar. 31, 2021 in European Patent Application No. EP20203975.6 (11 pages, in English).
(Continued)

Primary Examiner — Mathew Franklin Gordon
(74) *Attorney, Agent, or Firm* — Bookoff McAndrews, PLLC

(57) **ABSTRACT**

Disclosed are methods, systems, and non-transitory computer-readable medium for distributed vehicle processing. For instance, the method may include: in response to determining a first trigger condition of a first set of trigger conditions is satisfied, performing a first process corresponding to the first trigger condition on-board a vehicle; in response to determining a second trigger condition of a second set of trigger conditions is satisfied, prompting a second process corresponding to the second trigger condition by transmitting an edge request to an edge node and receiving an edge response from the edge node; and in response to determining a third trigger condition of a third set of trigger conditions is satisfied, prompting a third process corresponding to the third trigger condition by
(Continued)

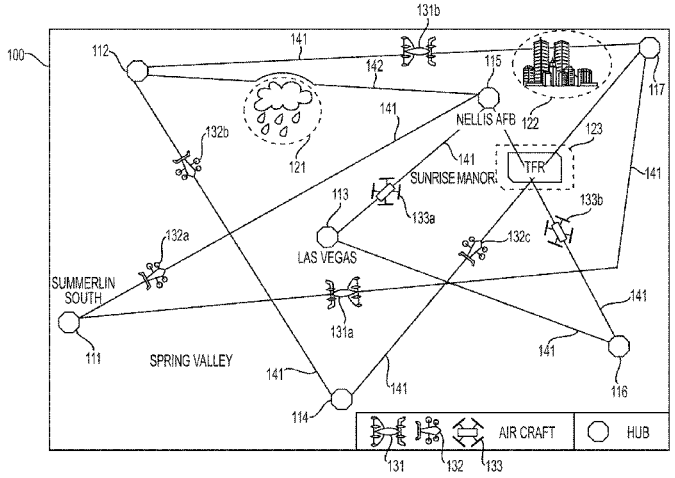

transmitting a cloud request to a cloud node and receiving a cloud response from the cloud node.

20 Claims, 15 Drawing Sheets

(51) **Int. Cl.**

G01S 19/12	(2010.01)
G08G 5/00	(2006.01)
G01S 19/48	(2010.01)
B64C 39/02	(2006.01)
B64D 43/00	(2006.01)
G01S 19/26	(2010.01)
H04L 43/10	(2022.01)
G06V 20/10	(2022.01)

(52) **U.S. Cl.**

CPC ***G01S 19/26*** (2013.01); ***G01S 19/48*** (2013.01); ***G01S 19/485*** (2020.05); ***G06T 7/70*** (2017.01); ***G06V 20/176*** (2022.01); ***G08G 5/003*** (2013.01); ***G08G 5/0004*** (2013.01); ***G08G 5/0008*** (2013.01); ***H04L 43/10*** (2013.01); *G06T 2207/10032* (2013.01); *G06T 2207/30184* (2013.01)

(58) **Field of Classification Search**

CPC G06T 2207/10032; G06T 2207/30184; G06V 20/176; B64C 39/02; B64D 43/00; B64D 47/08; G08G 5/0004; G08G 5/0008; G08G 5/003; H04L 43/10

See application file for complete search history.

(56) **References Cited**

U.S. PATENT DOCUMENTS

2018/0183855	A1	6/2018	Sabella et al.
2019/0268402	A1	8/2019	Kallakuri et al.

OTHER PUBLICATIONS

Jalali, Fatemeh, et al. "Dynamic edge fabric environment: Seamless and automatic switching among resources at the edge of iot network and cloud." 2019 IEEE International Conference on Edge Computing (EDGE). IEEE, 2019. (10 pages, in English).

Li, Z. et al. "Avionics clouds: A generic scheme for future avionics systems." 2012 IEEE/AIAA 31st Digital Avionics Systems Conference (DASC) (2012): 6E4-1-6E4-10.

Requirements for Operation of Civil Remotely Piloted Aircraft System (RPAS), issued Aug. 27, 2018, by Government of India Office of the Director General of Civil Aviation.

Han-Chuan Hsieh et al., "5G Virtualized Multi-access Edge Computing Platform for IoT Applications," Journal of Network and Computer Applications, vol. 115, Aug. 1, 2018, pp. 94-102, Available online May 10, 2018.

Thomas Cameron, "RF Technology for the 5G Millimeter Wave Radio," 2016.

Ericsson Mobility Report, Jun. 2018.

Theodore S. Rappaport et al., "Overview of Millimeter Wave Communications for Fifth-Generation (5G) Wireless Networks—With a Focus on Propagation Models," IEEE Transactions on Antennas and Propagation, vol. 65, No. 12, Dec. 2017, published Aug. 1, 2017.

Thomas Cameron, "Webcast: RF Technology for the 5G Millimeter Wave Radio," Sep. 27, 2018.

NGMN 5G White Paper, Feb. 17, 2015.

NASA UAS & UTM webpage, https://utm.arc.nasa.gov/index.shtml, accessed Oct. 1, 2020.

Karen Campbell et al., "IHS-Technology-5G-Economic-Impact-Study," Jan. 2017.

Fact Sheet—Small Unmanned Aircraft Regulations (Part 107), https://www.faa.gov/news/fact_sheets/news_story.cfm?newsId=22615, Jul. 23, 2018, accessed Oct. 1, 2020.

Ericsson, "Network Slicing can be a piece of cake," May 2018.

FCC, "Technological Advisory Council, Antenna Technologies, Working Group," Jun. 12, 2018.

Stefan Parkvall, "5G NR release 16—start of the 5G Evolution," Sep. 18, 2018, accessed Oct. 1, 2020.

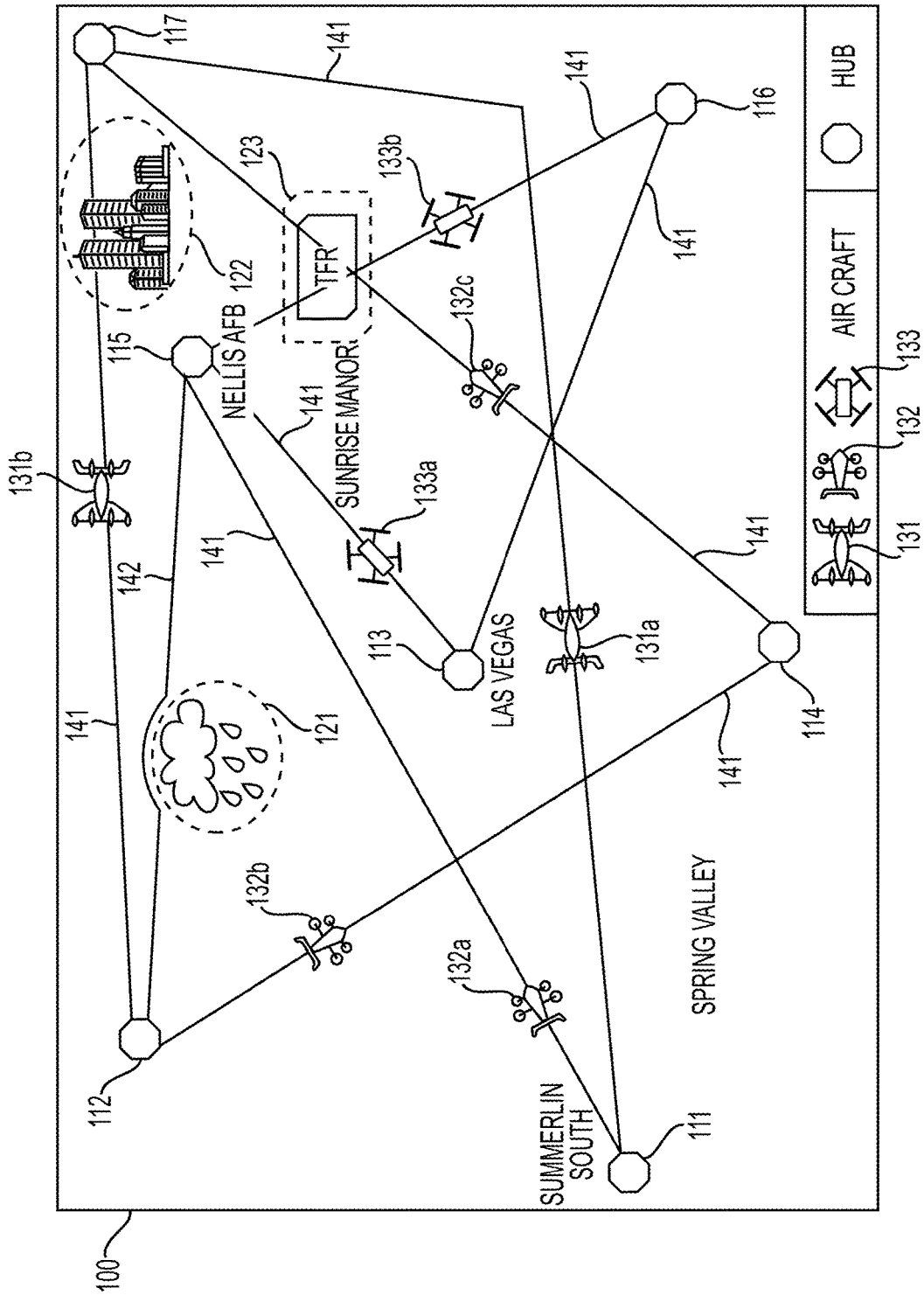
100
111
112
113
114
115
116
117
121
122
123
131
131a
131b
132
132a
132b
132c
133
133a
133b
141
142
TFR
NELLIS AFB
SUNRISE MANOR
LAS VEGAS
SPRING VALLEY
SUMMERLIN SOUTH
AIR CRAFT
HUB

FIG. 1

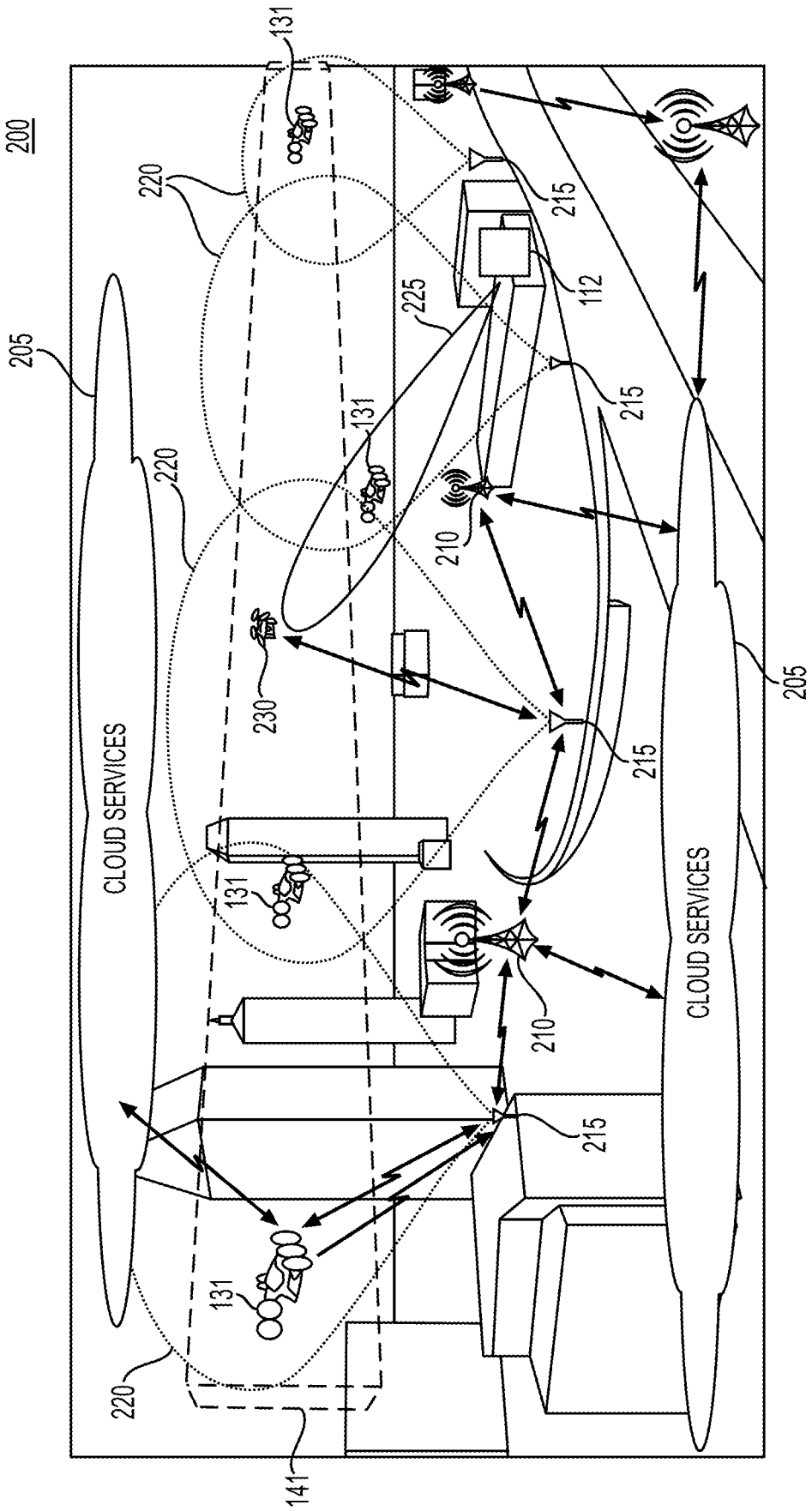

FIG. 2

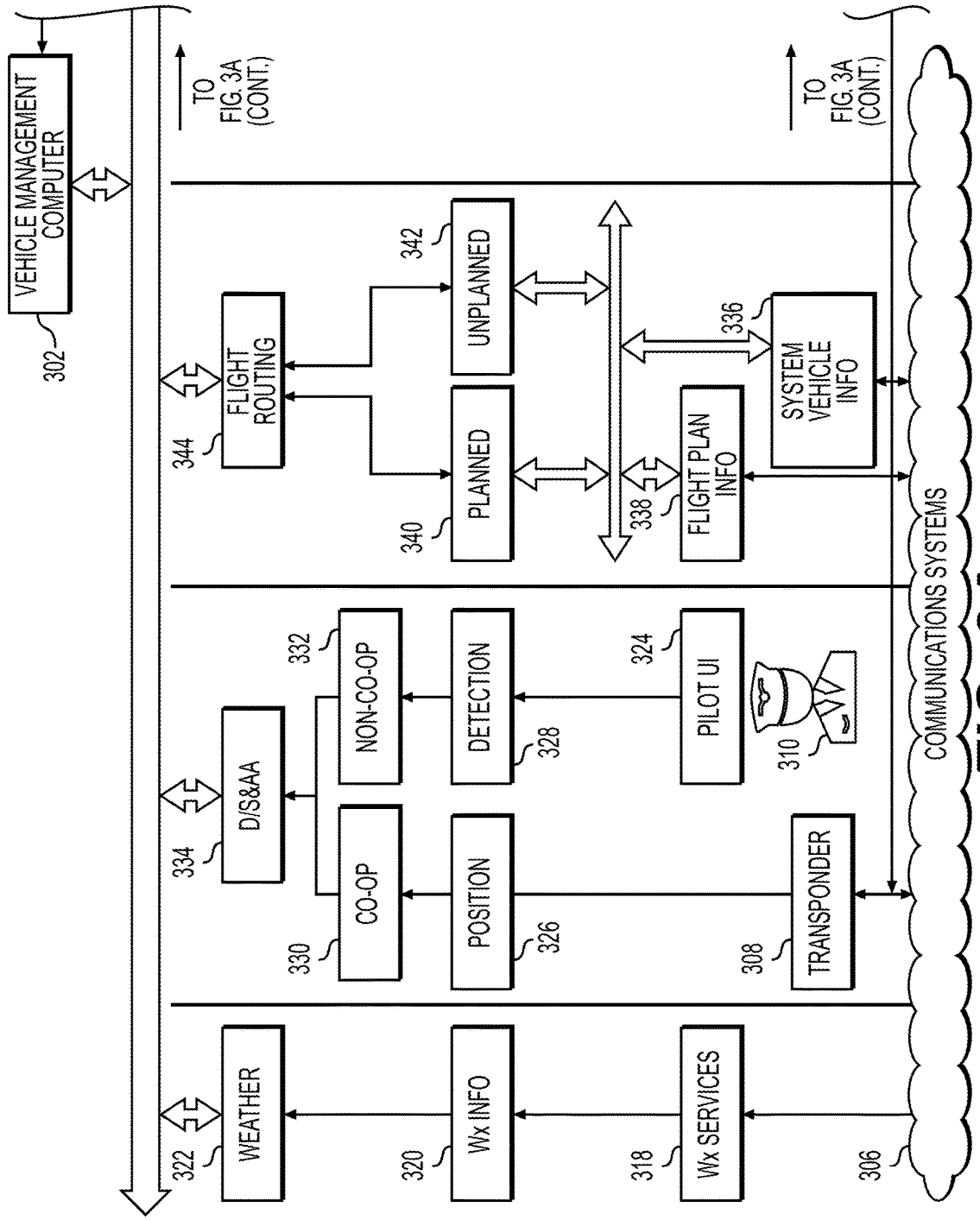
300A
VEHICLE MANAGEMENT COMPUTER
302
TO FIG. 3A (CONT.)
TO FIG. 3A (CONT.)
FLIGHT ROUTING
344
UNPLANNED
342
PLANNED
340
FLIGHT PLAN INFO
338
SYSTEM VEHICLE INFO
336
D/S&AA
334
NON-CO-OP
332
DETECTION
328
PILOT UI
324
CO-OP
330
POSITION
326
TRANSPONDER
308
WEATHER
322
Wx INFO
320
Wx SERVICES
318
COMMUNICATIONS SYSTEMS
306
310

FIG. 3A

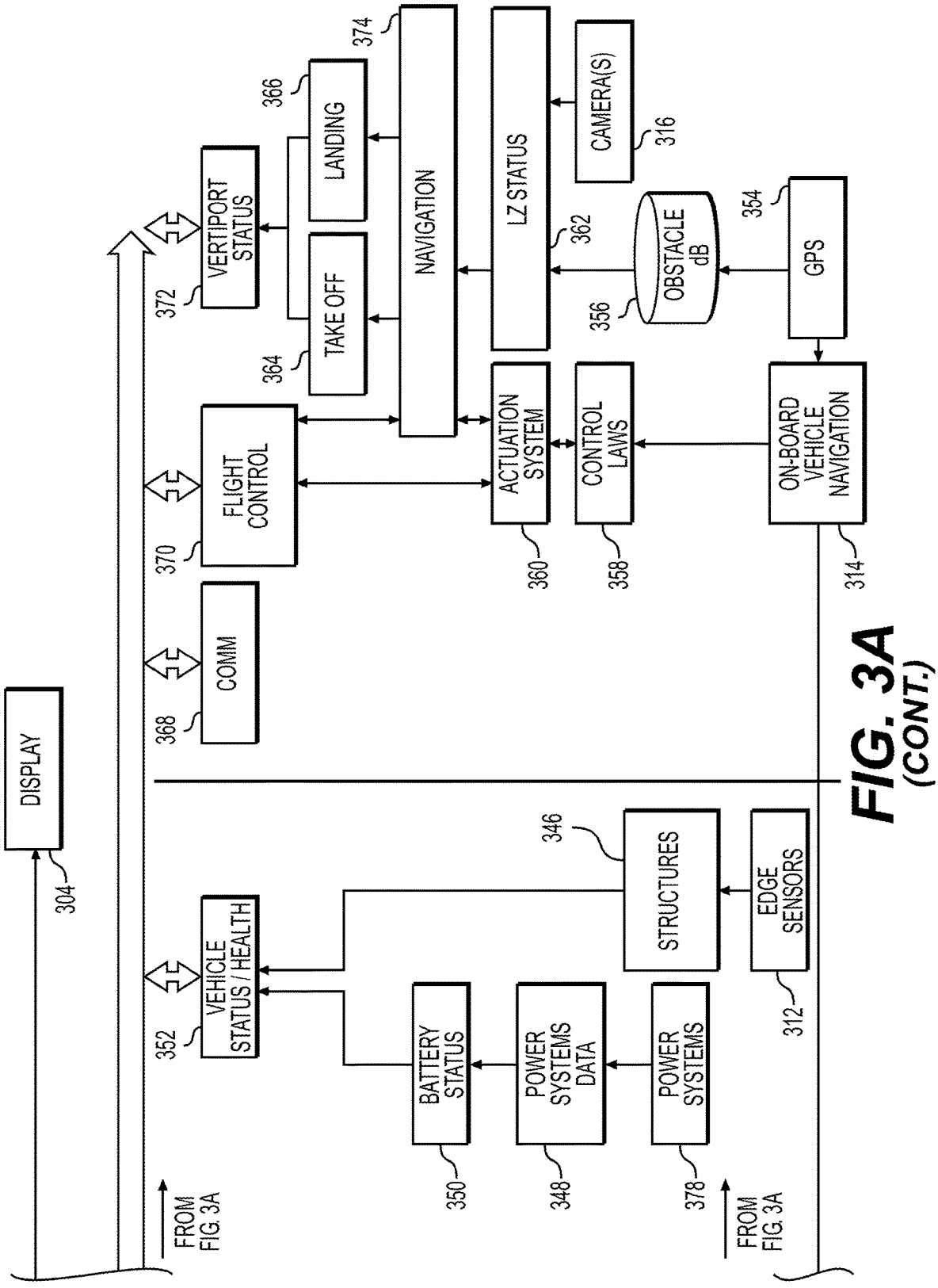
DISPLAY
304
FROM FIG. 3A
VEHICLE STATUS / HEALTH
352
BATTERY STATUS
350
POWER SYSTEMS DATA
348
POWER SYSTEMS
378
STRUCTURES
346
EDGE SENSORS
312
FROM FIG. 3A
COMM
368
FLIGHT CONTROL
370
VERTIPORT STATUS
372
TAKE OFF
364
LANDING
366
NAVIGATION
374
ACTUATION SYSTEM
360
CONTROL LAWS
358
LZ STATUS
362
OBSTACLE dB
356
CAMERA(S)
316
GPS
354
ON-BOARD VEHICLE NAVIGATION
314

FIG. 3A (CONT.)

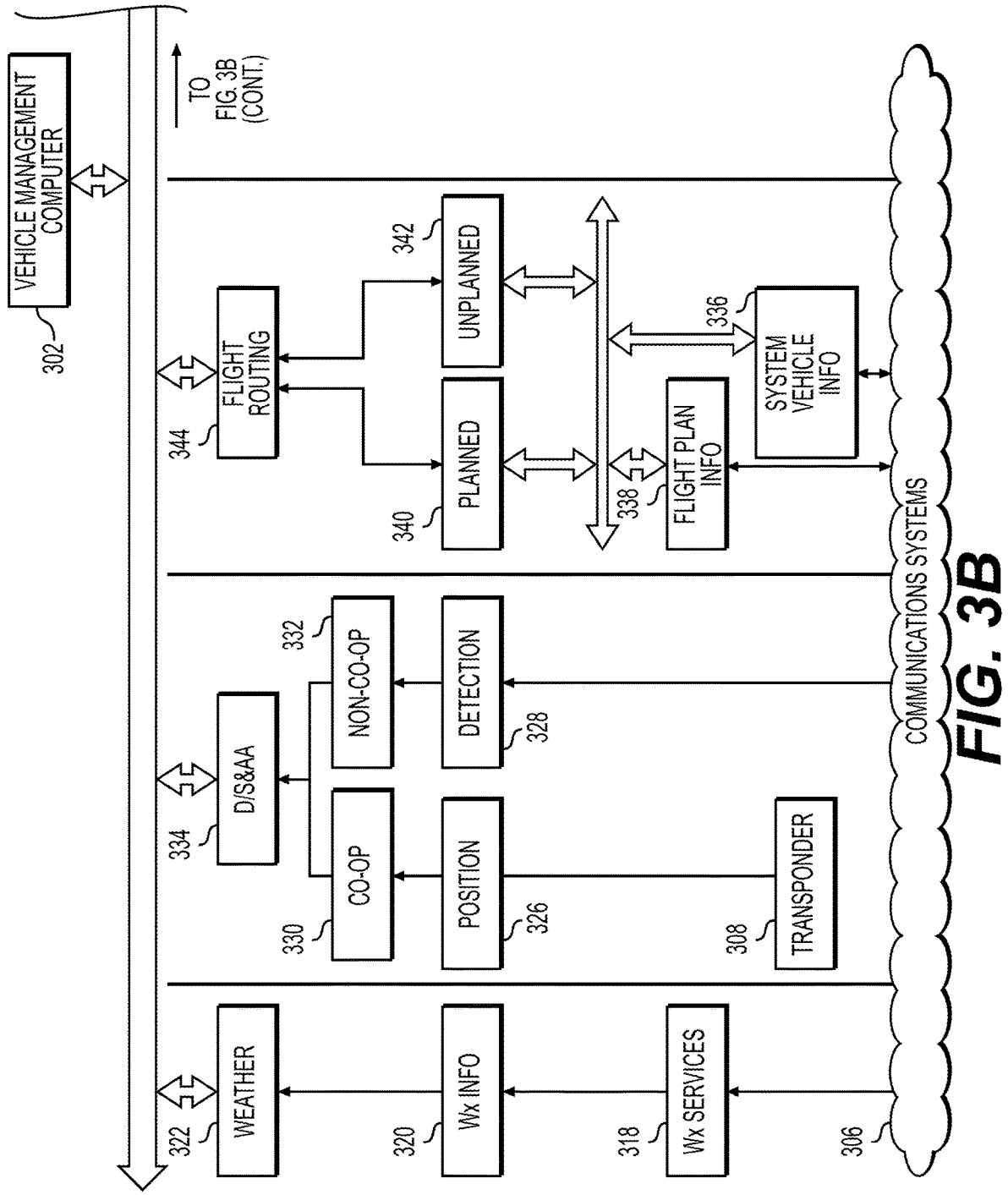
300B
VEHICLE MANAGEMENT COMPUTER
302
TO FIG. 3B (CONT.)
FLIGHT ROUTING
344
UNPLANNED
342
PLANNED
340
SYSTEM VEHICLE INFO
336
FLIGHT PLAN INFO
338
COMMUNICATIONS SYSTEMS
306
D/S&AA
334
NON-CO-OP
332
DETECTION
328
CO-OP
330
POSITION
326
TRANSPONDER
308
WEATHER
322
Wx INFO
320
Wx SERVICES
318

FIG. 3B

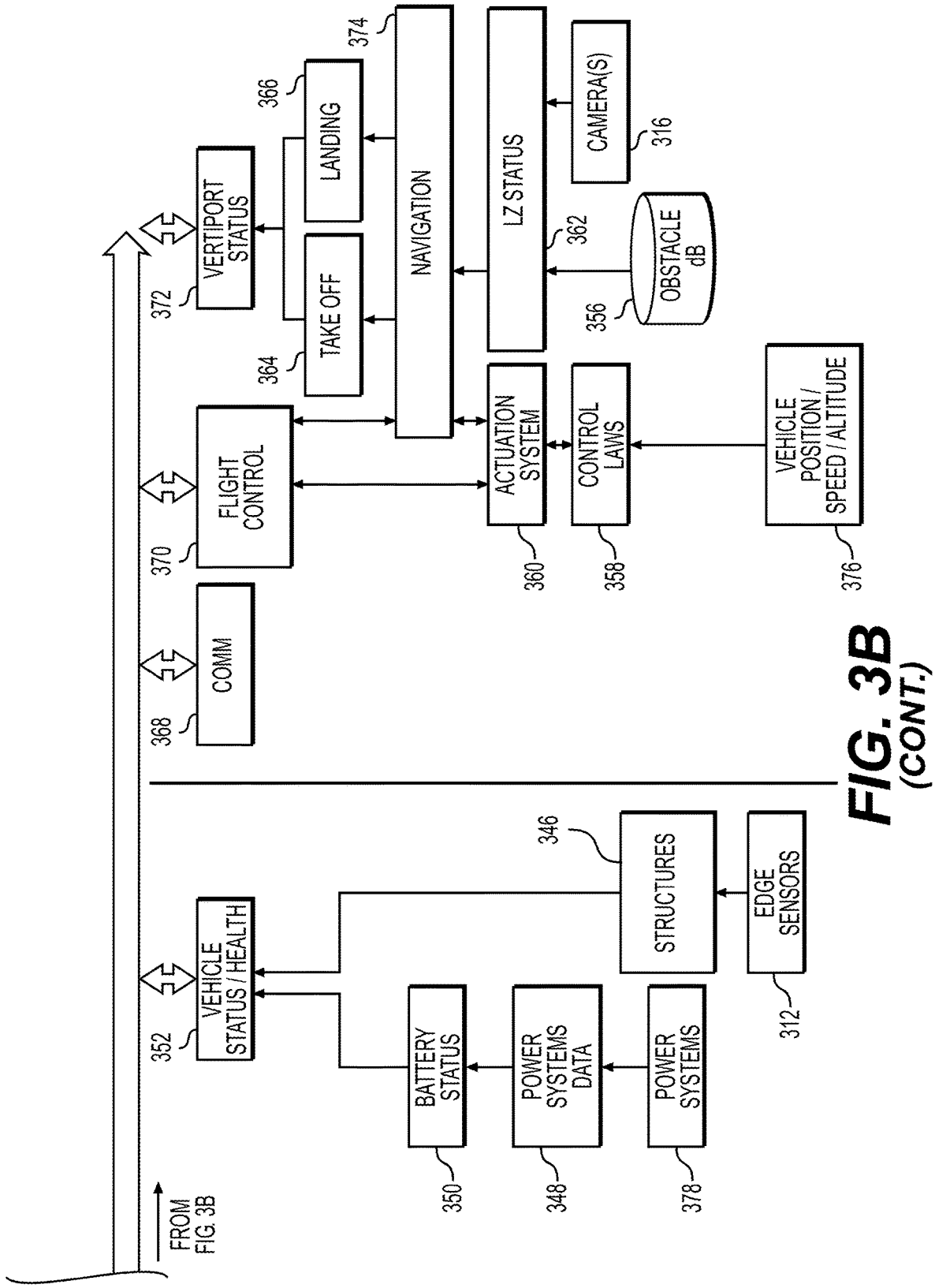
FROM FIG. 3B
VEHICLE STATUS / HEALTH
352
BATTERY STATUS
350
POWER SYSTEMS DATA
348
POWER SYSTEMS
378
STRUCTURES
346
EDGE SENSORS
312
COMM
368
FLIGHT CONTROL
370
VERTIPORT STATUS
372
TAKE OFF
364
LANDING
366
NAVIGATION
374
ACTUATION SYSTEM
360
CONTROL LAWS
358
LZ STATUS
362
OBSTACLE dB
356
CAMERA(S)
316
VEHICLE POSITION / SPEED / ALTITUDE
376

FIG. 3B (CONT.)

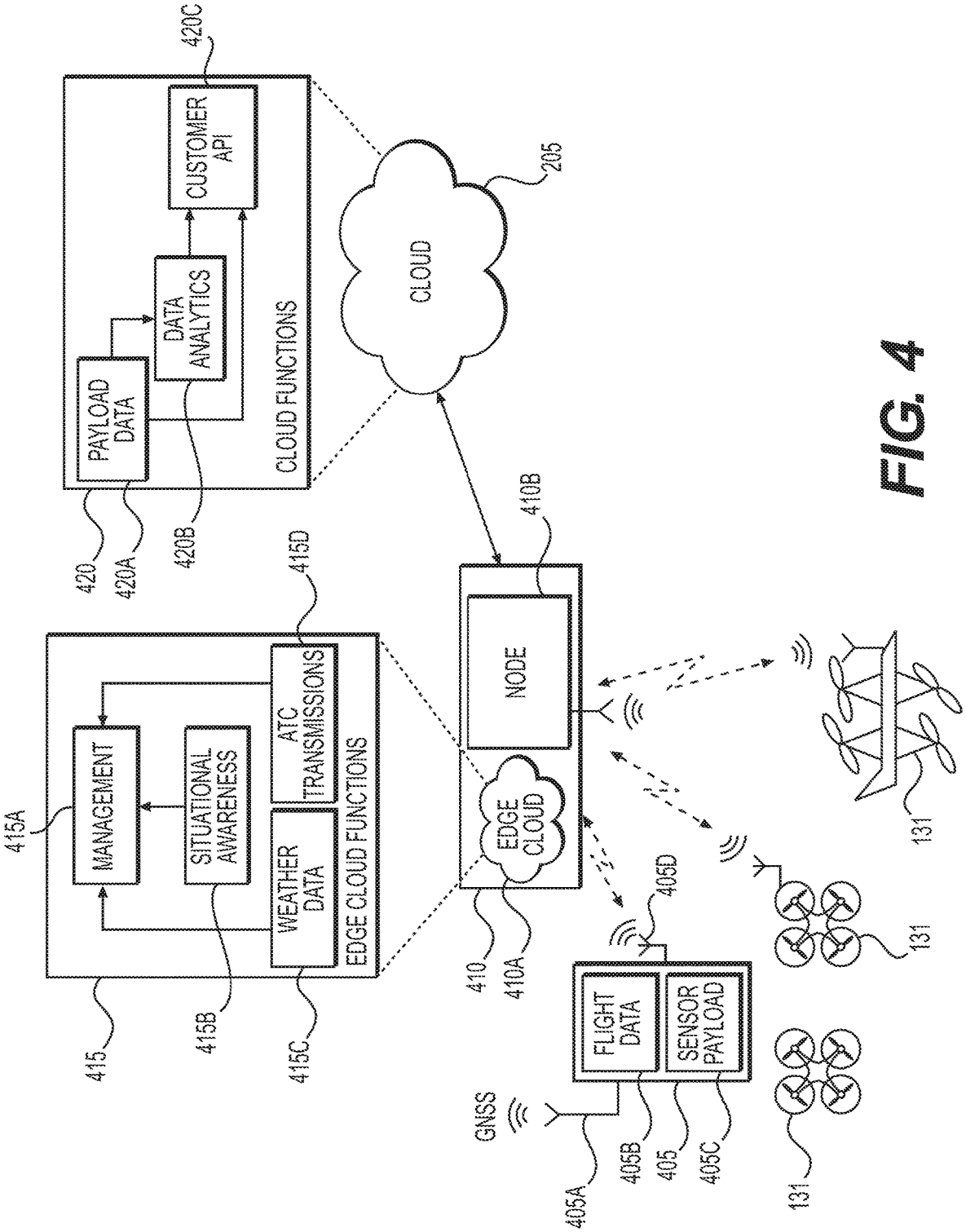
420C
CUSTOMER API
DATA ANALYTICS
PAYLOAD DATA
CLOUD FUNCTIONS
420
420A
420B
CLOUD
205
410B
NODE
EDGE CLOUD
410
410A
415D
ATC TRANSMISSIONS
WEATHER DATA
EDGE CLOUD FUNCTIONS
415A
MANAGEMENT
SITUATIONAL AWARENESS
415
415B
415C
405D
FLIGHT DATA
SENSOR PAYLOAD
GNSS
405A
405B
405
405C
131
131
131
131

FIG. 4

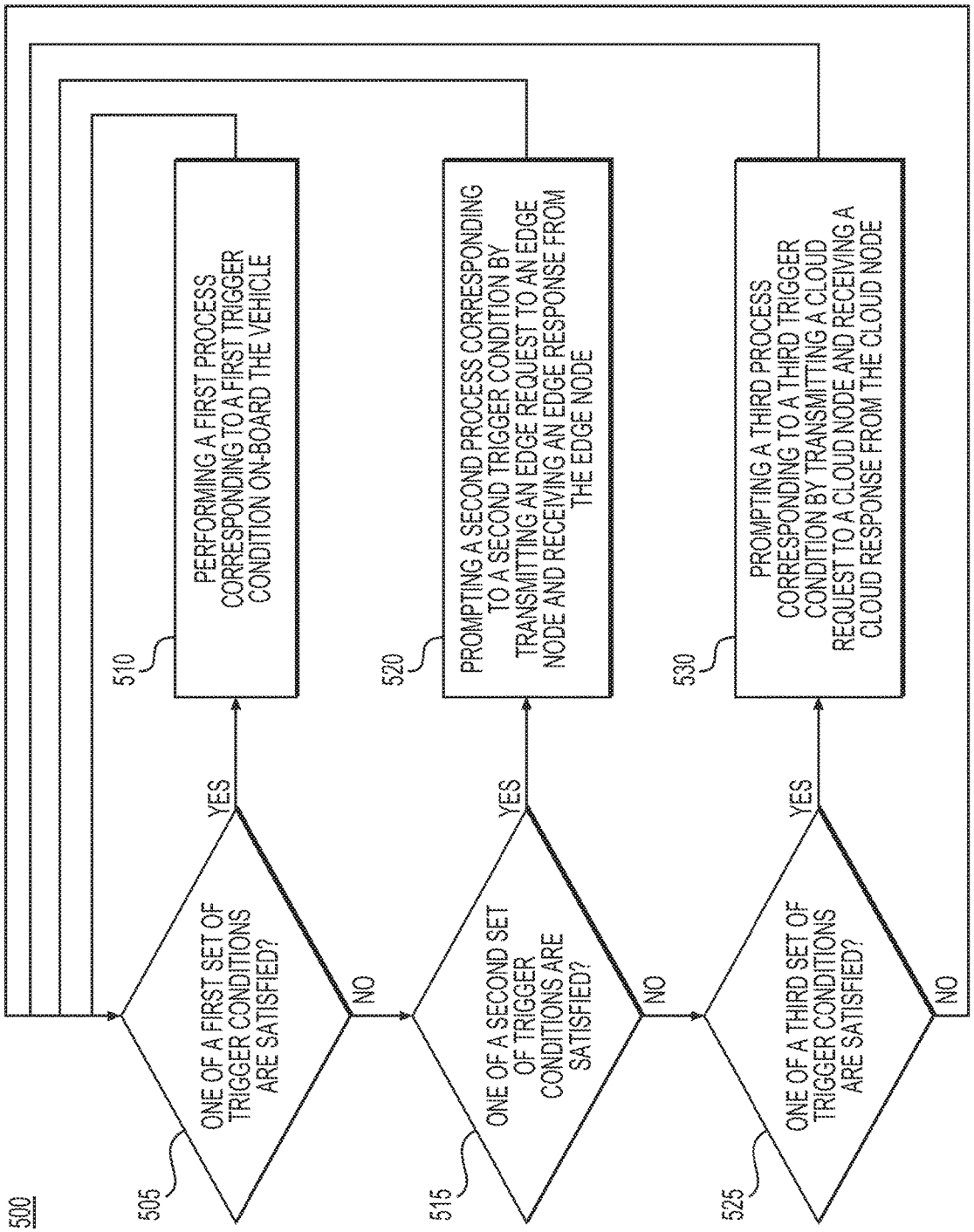
500
505
ONE OF A FIRST SET OF TRIGGER CONDITIONS ARE SATISFIED?
YES
NO
510
PERFORMING A FIRST PROCESS CORRESPONDING TO A FIRST TRIGGER CONDITION ON-BOARD THE VEHICLE
515
ONE OF A SECOND SET OF TRIGGER CONDITIONS ARE SATISFIED?
YES
NO
520
PROMPTING A SECOND PROCESS CORRESPONDING TO A SECOND TRIGGER CONDITION BY TRANSMITTING AN EDGE REQUEST TO AN EDGE NODE AND RECEIVING AN EDGE RESPONSE FROM THE EDGE NODE
525
ONE OF A THIRD SET OF TRIGGER CONDITIONS ARE SATISFIED?
YES
NO
530
PROMPTING A THIRD PROCESS CORRESPONDING TO A THIRD TRIGGER CONDITION BY TRANSMITTING A CLOUD REQUEST TO A CLOUD NODE AND RECEIVING A CLOUD RESPONSE FROM THE CLOUD NODE

FIG. 5

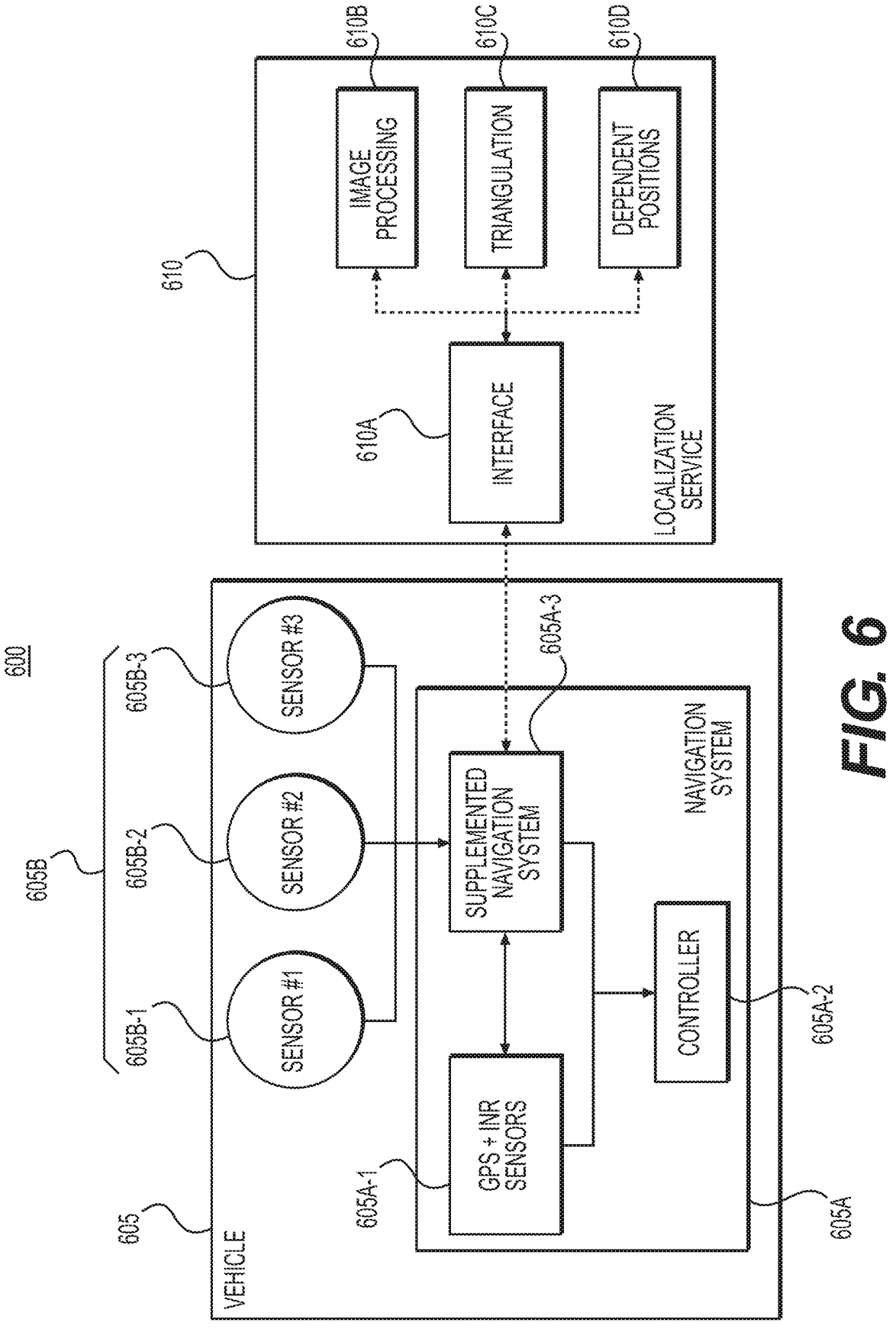
600
610
610B
610C
610D
IMAGE PROCESSING
TRIANGULATION
DEPENDENT POSITIONS
610A
INTERFACE
LOCALIZATION SERVICE
605
VEHICLE
605B
605B-1
605B-2
605B-3
SENSOR #1
SENSOR #2
SENSOR #3
605A-1
GPS + INR SENSORS
SUPPLEMENTED NAVIGATION SYSTEM
605A-3
CONTROLLER
605A-2
NAVIGATION SYSTEM
605A

FIG. 6

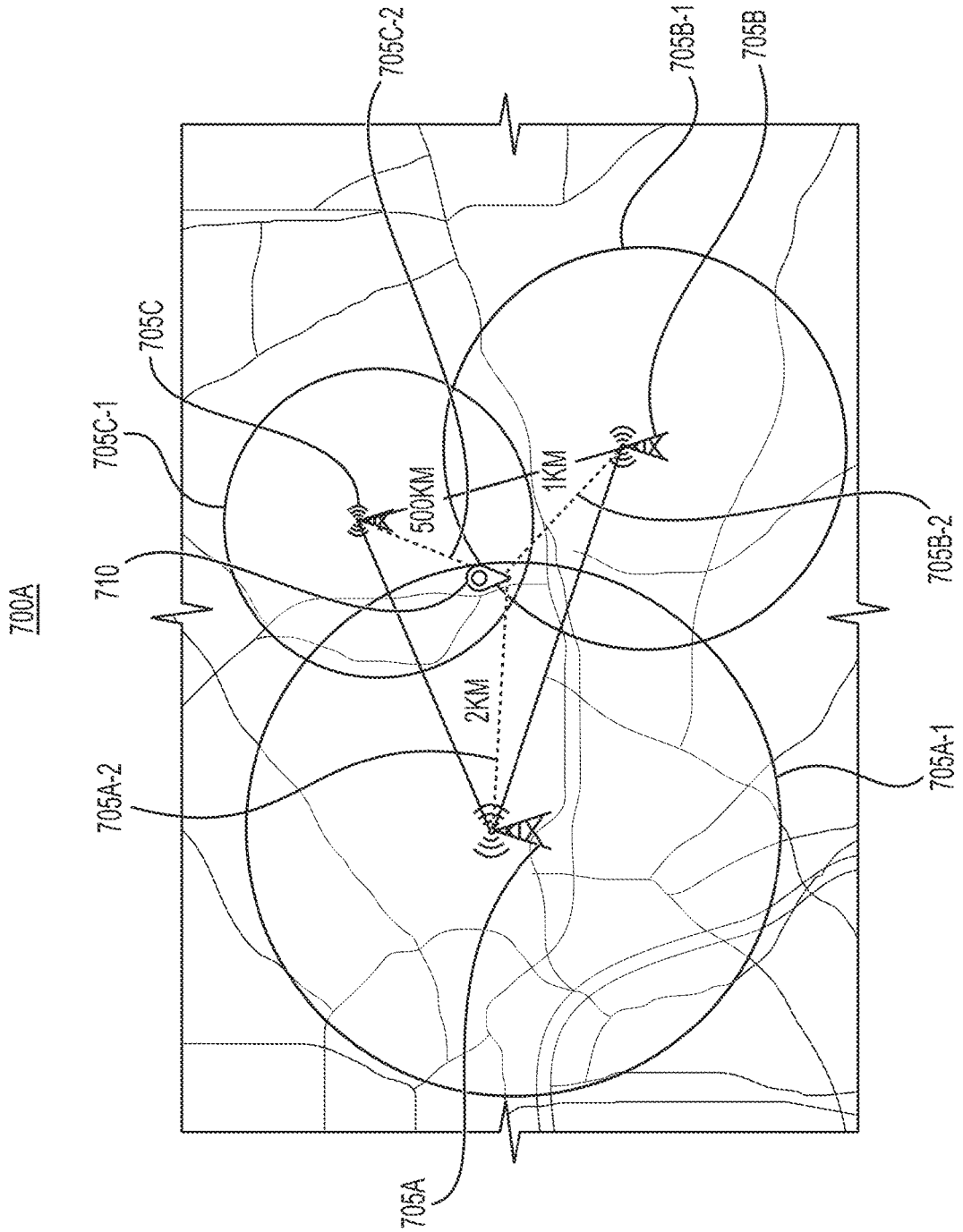
700A
705C-2
705B-1
705B
705C
705C-1
710
500KM
1KM
705B-2
2KM
705A-2
705A-1
705A

FIG. 7A

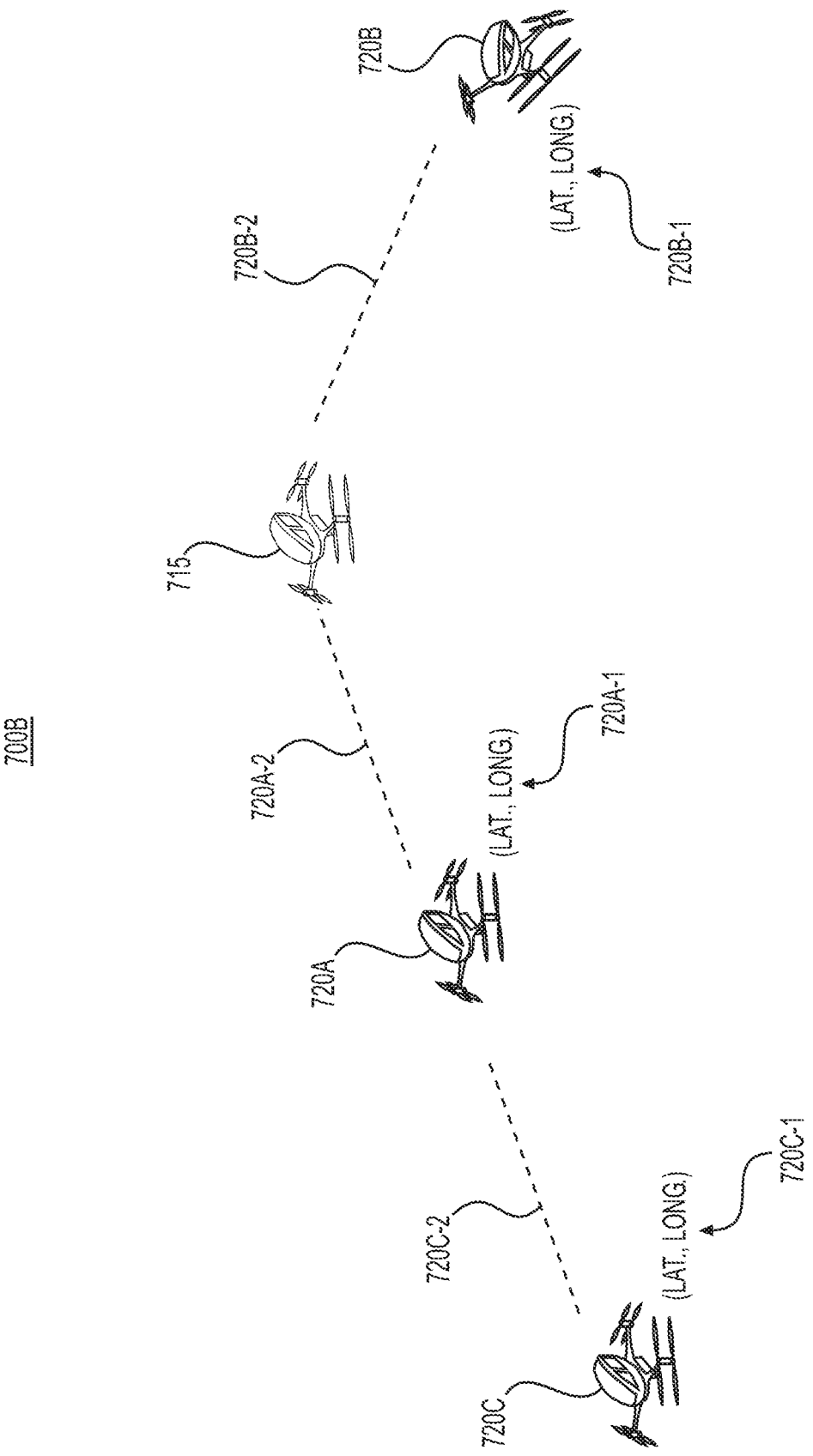
700B
715
720A
720A-2
(LAT., LONG.)
720A-1
720B
720B-2
(LAT., LONG.)
720B-1
720C
720C-2
(LAT., LONG.)
720C-1

FIG. 7B

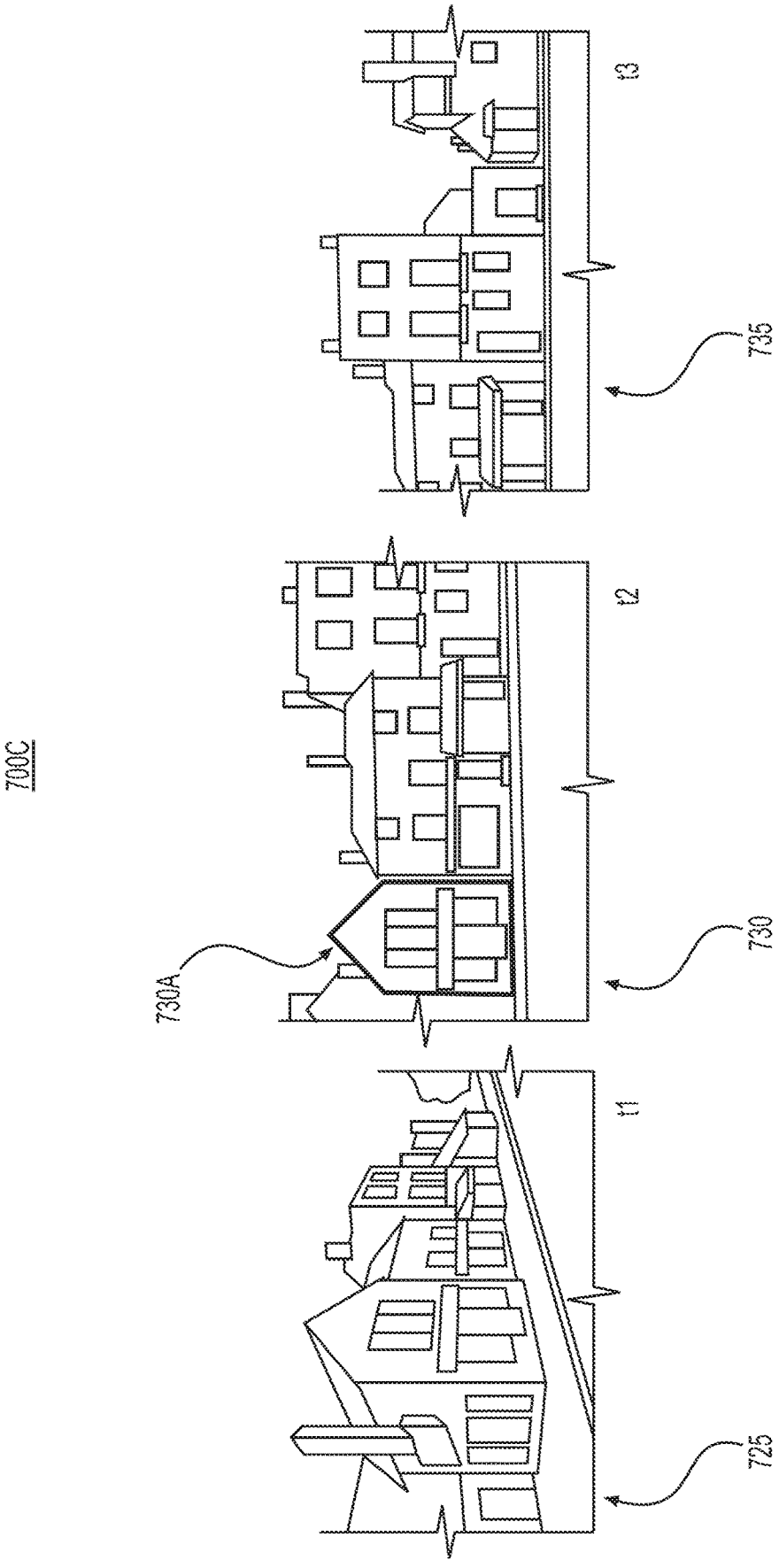

FIG. 7C

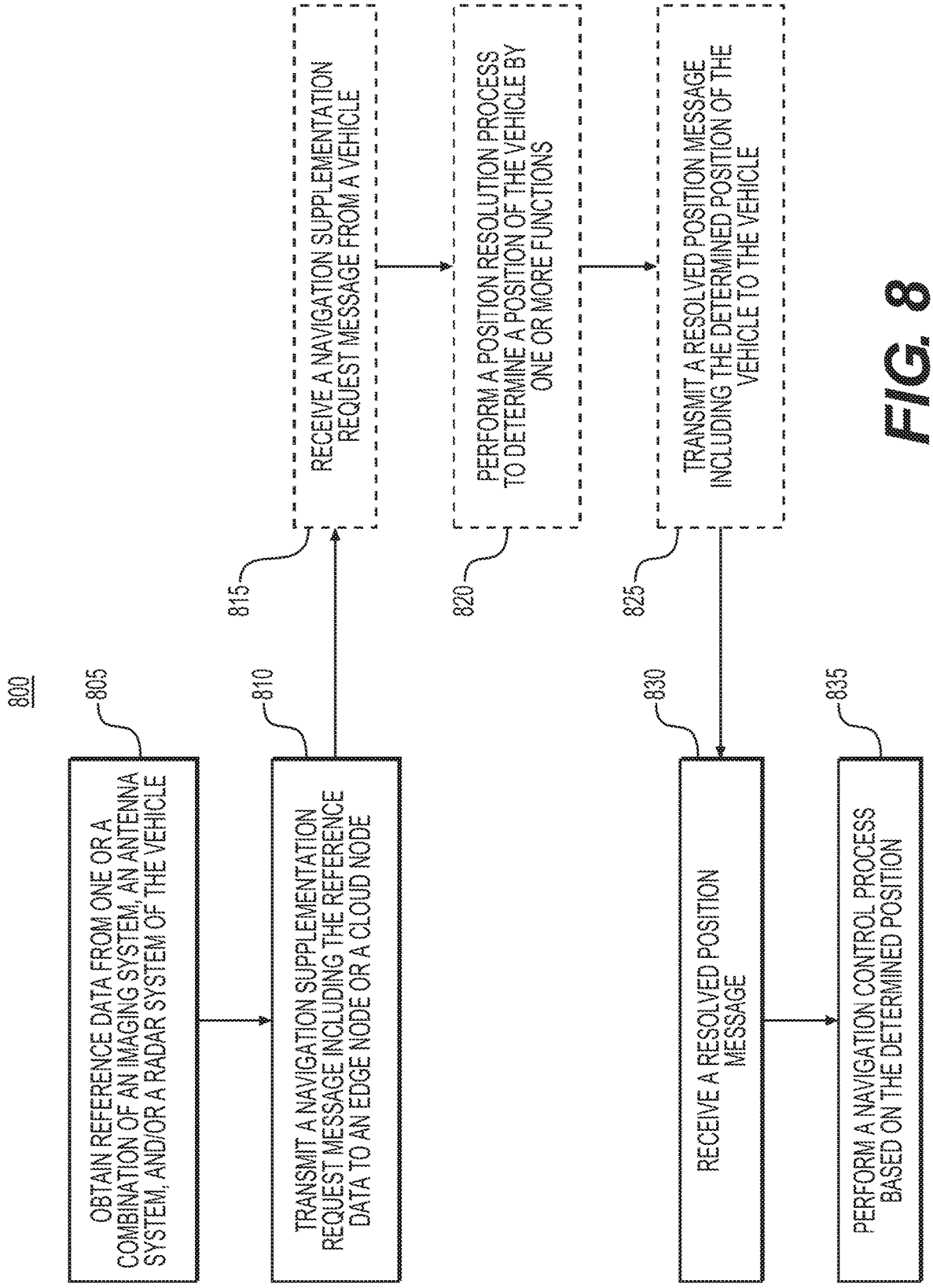
800
805
OBTAIN REFERENCE DATA FROM ONE OR A COMBINATION OF AN IMAGING SYSTEM, AN ANTENNA SYSTEM, AND/OR A RADAR SYSTEM OF THE VEHICLE
810
TRANSMIT A NAVIGATION SUPPLEMENTATION REQUEST MESSAGE INCLUDING THE REFERENCE DATA TO AN EDGE NODE OR A CLOUD NODE
815
RECEIVE A NAVIGATION SUPPLEMENTATION REQUEST MESSAGE FROM A VEHICLE
820
PERFORM A POSITION RESOLUTION PROCESS TO DETERMINE A POSITION OF THE VEHICLE BY ONE OR MORE FUNCTIONS
825
TRANSMIT A RESOLVED POSITION MESSAGE INCLUDING THE DETERMINED POSITION OF THE VEHICLE TO THE VEHICLE
830
RECEIVE A RESOLVED POSITION MESSAGE
835
PERFORM A NAVIGATION CONTROL PROCESS BASED ON THE DETERMINED POSITION

FIG. 8

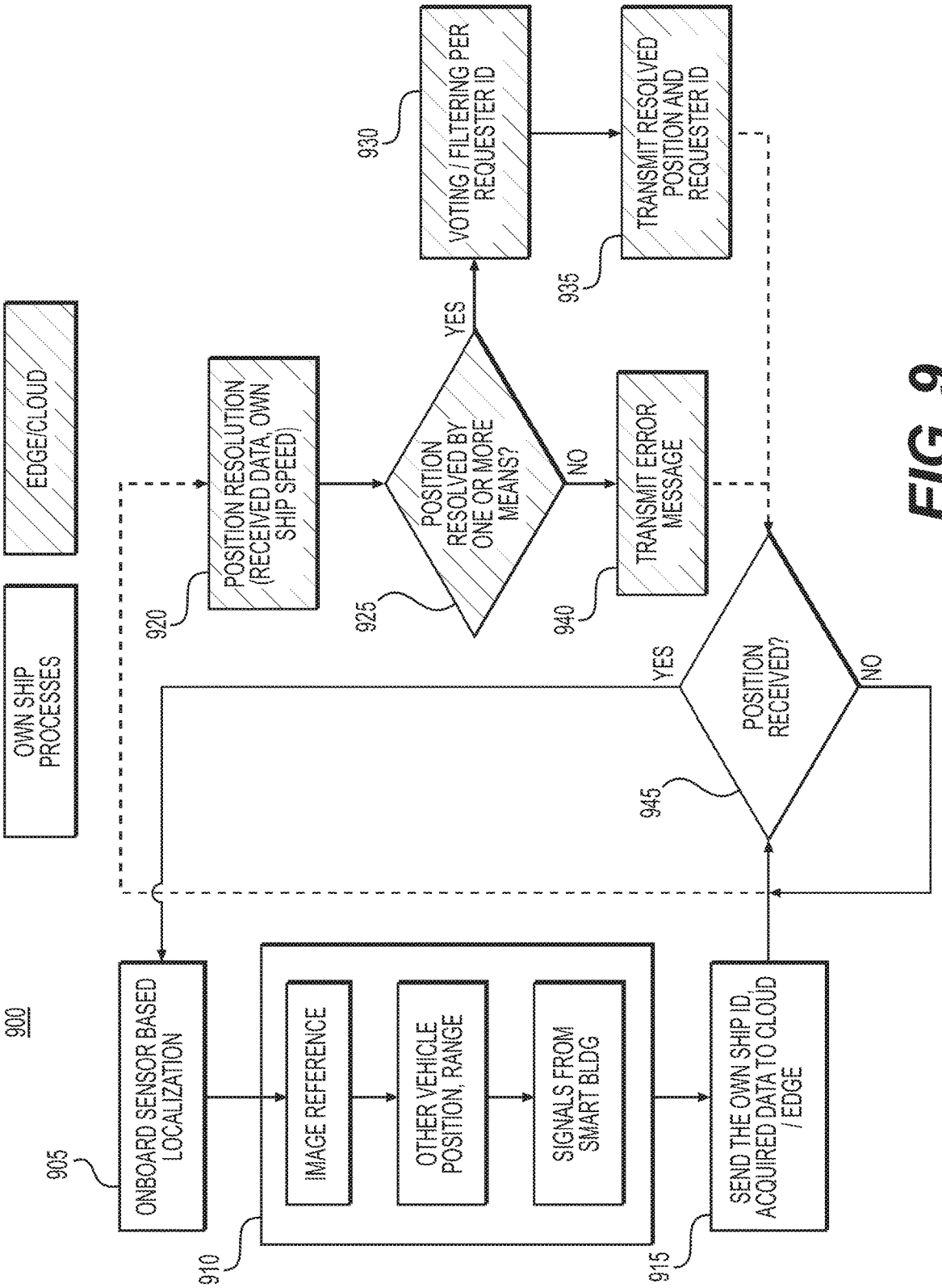
900
OWN SHIP PROCESSES
EDGE/CLOUD
905
ONBOARD SENSOR BASED LOCALIZATION
910
IMAGE REFERENCE
OTHER VEHICLE POSITION, RANGE
SIGNALS FROM SMART BLDG
915
SEND THE OWN SHIP ID, ACQUIRED DATA TO CLOUD / EDGE
945
POSITION RECEIVED?
YES
NO
920
POSITION RESOLUTION (RECEIVED DATA, OWN SHIP SPEED)
925
POSITION RESOLVED BY ONE OR MORE MEANS?
YES
NO
930
VOTING / FILTERING PER REQUESTER ID
935
TRANSMIT RESOLVED POSITION AND REQUESTER ID
940
TRANSMIT ERROR MESSAGE

FIG. 9

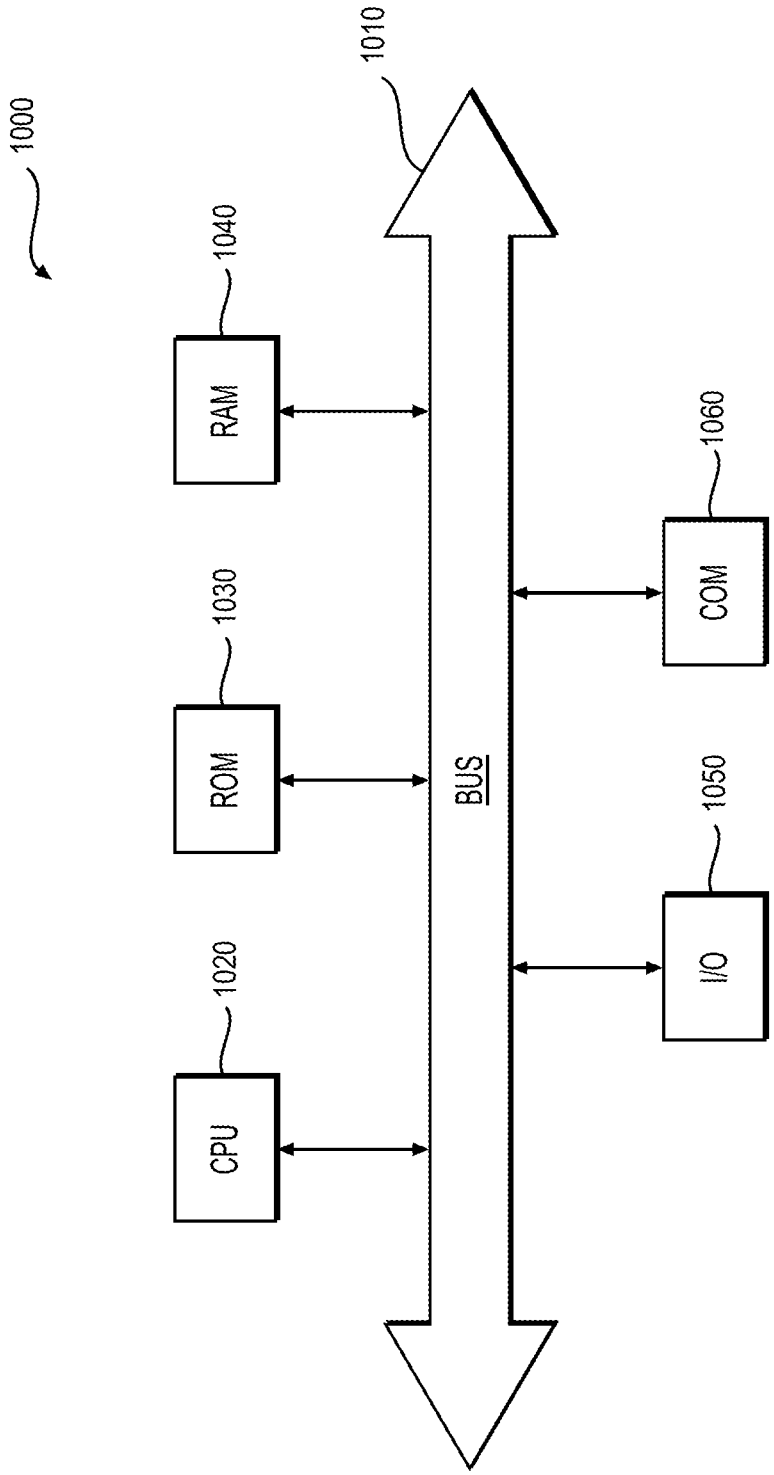

FIG. 10

SYSTEMS AND METHODS FOR DISTRIBUTED AVIONICS PROCESSING

CROSS-REFERENCE TO RELATED APPLICATION(S)

This patent application claims the benefit of priority under 35 U.S.C. § 119 from Indian Patent Application No. 201911044179, filed on Oct. 31, 2019, the contents of which is incorporated by reference in its entirety.

TECHNICAL FIELD

Various embodiments of the present disclosure relate generally to systems and methods for distributed vehicle processing and to systems and methods for distributed vehicle processing for supplemental navigation.

BACKGROUND

Avionics radios are currently based on radio standards specified by RTCA and/or ARINC and typically use voice or low data rates, while prioritizing Aviation safety. The civilian use of radio spectrum (cell phone networks) has developed on a different track which prioritizes efficiency of spectrum use and significantly higher data rates. However, as urban air mobility (UAM) vehicles are operating nearer to the surface than traditional avionics communications infrastructure, where cell phone networks are more accessible, so UAM vehicles may be able to make use cell phone networks. Furthermore, UAM vehicles may have constrained resource requirements (energy, payload, weight) while maintaining stringent safety standards. Therefore, it may be a challenge hosting numerous systems and relatively large software processing power on board UAM vehicles, while maintaining the stringent safety standards.

Moreover, navigation may be a significant challenge for UAM vehicles, as their typical operating environment is at low altitudes and with a vehicle density that is multifold compared to current day aviation. For instance, GPS availability may be limited or the signal quality significantly degraded in the UAM environment because of, e.g., canyon effects/poor visibility of GNSS signals, tall building and obstructions to name a few. Moreover, the UAM environment may include ground erected obstacles and poor visibility (e.g., due to smog/fog), which could impair both radio and optical ranging. Therefore, it may be a challenge to build an integrated low-cost navigation system even with the recent advances in communication, computing, and sensing technologies.

The present disclosure is directed to overcoming one or more of these above-referenced challenges.

SUMMARY OF THE DISCLOSURE

According to certain aspects of the disclosure, systems and methods are disclosed for distributed vehicle processing and distributed vehicle processing for supplemental navigation.

For instance, a method, for distributed vehicle processing for a vehicle, may include: determining whether one of a first set of trigger conditions, one of a second set of trigger conditions, or one of a third set of trigger conditions are satisfied; in response to determining a first trigger condition of the first set of trigger conditions is satisfied, performing a first process corresponding to the first trigger condition on-board the vehicle; in response to determining a second trigger condition of the second set of trigger conditions is satisfied, prompting a second process corresponding to the second trigger condition by transmitting an edge request to an edge node and receiving an edge response from the edge node; and in response to determining a third trigger condition of the third set of trigger conditions is satisfied, prompting a third process corresponding to the third trigger condition by transmitting a cloud request to a cloud node and receiving a cloud response from the cloud node.

Moreover, a system may comprise a memory storing instructions; and a processor executing the instructions to perform a process. The process including: determining whether one of a first set of trigger conditions, one of a second set of trigger conditions, or one of a third set of trigger conditions are satisfied; in response to determining a first trigger condition of the first set of trigger conditions is satisfied, performing a first process corresponding to the first trigger condition on-board the vehicle; in response to determining a second trigger condition of the second set of trigger conditions is satisfied, prompting a second process corresponding to the second trigger condition by transmitting an edge request to an edge node and receiving an edge response from the edge node; and in response to determining a third trigger condition of the third set of trigger conditions is satisfied, prompting a third process corresponding to the third trigger condition by transmitting a cloud request to a cloud node and receiving a cloud response from the cloud node.

Additionally, a non-transitory computer-readable medium storing instructions that, when executed by a processor, cause the processor to perform a method. The method may include: determining whether one of a first set of trigger conditions, one of a second set of trigger conditions, or one of a third set of trigger conditions are satisfied; in response to determining a first trigger condition of the first set of trigger conditions is satisfied, performing a first process corresponding to the first trigger condition on-board the vehicle; in response to determining a second trigger condition of the second set of trigger conditions is satisfied, prompting a second process corresponding to the second trigger condition by transmitting an edge request to an edge node and receiving an edge response from the edge node; and in response to determining a third trigger condition of the third set of trigger conditions is satisfied, prompting a third process corresponding to the third trigger condition by transmitting a cloud request to a cloud node and receiving a cloud response from the cloud node.

Additional objects and advantages of the disclosed embodiments will be set forth in part in the description that follows, and in part will be apparent from the description, or may be learned by practice of the disclosed embodiments.

It is to be understood that both the foregoing general description and the following detailed description are exemplary and explanatory only and are not restrictive of the disclosed embodiments, as claimed.

BRIEF DESCRIPTION OF THE DRAWINGS

The accompanying drawings, which are incorporated in and constitute a part of this specification, illustrate various exemplary embodiments and together with the description, serve to explain the principles of the disclosed embodiments.

FIG. **1** depicts an example environment in which methods, systems, and other aspects of the present disclosure may be implemented.

FIG. **2** depicts an exemplary a system, according to one or more embodiments.

FIGS. **3**A and **3**B depict exemplary block diagrams of a vehicle of a system, according to one or more embodiments.

FIG. **4** depicts an exemplary a system for distributed avionics processing, according to one or more embodiments.

FIG. **5** depicts an exemplary flowchart for distributed avionics processing, according to one or more embodiments

FIG. **6** depicts an exemplary a system for distributed avionics processing for supplemental navigation, according to one or more embodiments.

FIG. **7**A-**7**C depict exemplary system environments for distributed avionics processing for supplemental navigation, according to one or more embodiments.

FIG. **8** depicts an exemplary flowchart for distributed avionics processing for supplemental navigation, according to one or more embodiments

FIG. **9** depicts an exemplary flowchart for distributed avionics processing for supplemental navigation, according to one or more embodiments

FIG. **10** depicts an example system that may execute techniques presented herein.

DETAILED DESCRIPTION OF EMBODIMENTS

Various embodiments of the present disclosure relate generally to systems and methods for distributed vehicle processing and to systems and methods for distributed vehicle processing for supplemental navigation.

In general, the present disclosure is directed to distributed processing for avionics functionality. For instance, the methods and systems of the present disclosure may enable partitioning and hosting avionics applications on low latency wireless networks (e.g., such as 5G networks) by offloading computation, storage and other data functions to processing entities on a wireless mobile network edge (such as in edge nodes with 5G communications and computing power in an urban environment). This method of partitioning and hosting avionics applications may have an advantage of reducing resource requirements (energy, payload, timing and processing budgets) on weight constrained aircraft, while maintaining stringent safety standards by keeping navigation and management at the edge nodes of the wireless mobile network edge. Therefore, by implementing avionics applications on the edge nodes, UAM vehicles may achieve better tradeoffs in battery, power, serviceable range, performance, and payloads. For instance, only actuation systems to operate a UAM vehicle, sensors (such as GPS, cameras, IRS, etc.), and the most-time-sensitive processing is hosted on the UAM vehicle, while relatively slower but tightly coupled processing (management, mission planning, navigation, etc.) may be performed on the edge nodes. Meanwhile, applications that can tolerate larger delays can be hosted on the cloud, such as mission payload data and analytics, etc.

For another aspect of the disclosure, the systems and methods of the present disclosure may provide cross-referenced supplemental navigation. For instance, edge nodes/cloud nodes may cross-reference and error check known geographical patterns, cellular/beacon trilateration, ground radio based references, digital adaptive phased array radars (DAPA), known proximate vehicle positions, to supplement for a low accuracy autonomous navigation sensor.

While this disclosure describes the systems and methods with reference to aircraft, it should be appreciated that the present systems and methods are applicable to management of vehicles, including those of drones, automobiles, ships, or any other autonomous and/or Internet-connected vehicle.

As shown in FIG. **1**, FIG. **1** depicts an example environment in which methods, systems, and other aspects of the present disclosure may be implemented. The environment of FIG. **1** may include an airspace **100** and one or more hubs **111-117**. A hub, such as any one of **111-117**, may be a ground facility where aircraft may take off, land, or remain parked (e.g., airport, vertiport, heliport, vertistop, helistop, temporary landing/takeoff facility, or the like). The airspace **100** may accommodate aircraft of various types **131-133** (collectively, "aircraft **131**" unless indicated otherwise herein), flying at various altitudes and via various routes **141**. An aircraft, such as any one of aircraft **131***a*-**133***b*, may be any apparatus or vehicle of air transportation capable of traveling between two or more hubs **111-117**, such as an airplane, a vertical take-off and landing aircraft (VTOL), a drone, a helicopter, an unmanned aerial vehicle (UAV), a hot-air balloon, a military aircraft, etc. Any one of the aircraft **131***a*-**133***b* may be connected to one another and/or to one or more of the hubs **111-117**, over a communication network, using a vehicle management computer corresponding to each aircraft or each hub. Each vehicle management computer may comprise a computing device and/or a communication device, as described in more detail below in FIGS. **3**A and **3**B. As shown in FIG. **1**, different types of aircraft that share the airspace **100** are illustrated, which are distinguished, by way of example, as model **131** (aircraft **131***a* and **131***b*), model **132** (aircraft **132***a*, **132***b*, and **132***c*), and model **133** (aircraft **133***a* and **133***b*).

As further shown in FIG. **1**, an airspace **100** may have one or more weather constraints **121**, spatial restrictions **122** (e.g., buildings), and temporary flight restrictions (TFR) **123**. These are exemplary factors that a vehicle management computer of an aircraft may be required to consider and/or analyze in order to derive the most safe and optimal flight trajectory of the aircraft. For example, if a vehicle management computer of an aircraft planning to travel from hub **112** to hub **115** predicts that the aircraft may be affected by an adverse weather condition, such as weather constraint **121**, in the airspace, the vehicle management computer may modify a direct path (e.g., the route **141** between hub **112** and hub **115**) with a slight curvature away from the weather constraint **121** (e.g., a northward detour) to form a deviated route **142**. For instance, the deviated route **142** may ensure that the path and the time of the aircraft (e.g., 4-D coordinates of the flight trajectory) do not intersect any position and time coordinates of the weather constraint **121** (e.g., 4-D coordinates of the weather constraint **121**).

As another example, the vehicle management computer of aircraft **131***b* may predict, prior to take-off, that spatial restriction **122**, caused by buildings, would hinder the direct flight path of aircraft **131***b* flying from hub **112** to hub **117**, as depicted in FIG. **1**. In response to that prediction, the vehicle management computer of aircraft **131***b* may generate a 4-D trajectory with a vehicle path that bypasses a 3-dimensional zone (e.g., zone including the location and the altitude) associated with those particular buildings. As yet another example, the vehicle management computer of aircraft **133***b* may predict, prior to take-off, that TFR **123**, as well as some potential 4-D trajectories of another aircraft **132***c*, would hinder or conflict with the direct flight path of aircraft **133***b*, as depicted in FIG. **1**. In response, the vehicle management computer of aircraft **133***b* may generate a 4-D trajectory with path and time coordinates that do not intersect either the 4-D coordinates of the TFR **123** or the 4-D trajectory of the other aircraft **132***c*. In this case, the TFR **123**

and collision risk with another aircraft **132***c* are examples of dynamic factors which may or may not be in effect, depending on the scheduled time of travel, the effective times of TFR, and the path and schedule of the other aircraft **132***c*. As described in these examples, the 4-D trajectory derivation process, including any modification or re-negotiation, may be completed prior to take-off of the aircraft.

As another example, the vehicle management computer of aircraft **131***b* may determine to use one of the routes **141** that are set aside for aircraft **131** to use, either exclusively or non-exclusively. The aircraft **131***b* may generate a 4-D trajectory with a vehicle path that follows one of the routes **141**.

As indicated above, FIG. **1** is provided merely as an example environment of an airspace that includes exemplary types of aircraft, hubs, zones, restrictions, and routes. Regarding particular details of the aircraft, hubs, zones, restrictions, and routes, other examples are possible and may differ from what was described with respect to FIG. **1**. For example, types of zones and restrictions which may become a factor in trajectory derivation, other than those described above, may include availability of hubs, reserved paths or sky lanes (e.g., routes **141**), any ground-originating obstacle which extends out to certain levels of altitudes, any known zones of avoidance (e.g., noise sensitive zones), air transport regulations (e.g., closeness to airports), etc. Any factor that renders the 4-D trajectory to be modified from the direct or the shortest path between two hubs may be considered during the derivation process.

FIG. **2** depicts an exemplary a system, according to one or more embodiments. The system **200** depicted in FIG. **2** may include one or more aircraft, such as aircraft **131**, one or more intruder aircraft **230**, a cloud service **205**, one or more communications station(s) **210**, and/or one or more ground station(s) **215**. The one or more aircraft **131** may be traveling from a first hub (e.g., hub **114**) to a second hub (e.g., hub **112**) along a route of routes **141**. Between, near, and/or on hubs, such as hubs **111-117**, the one or more ground station(s) **215** may be distributed (e.g., evenly, based on traffic considerations, etc.) along/near/on/under routes **141**. Between, near, and/or on hubs, such as hubs **111-117**, the one or more communications station(s) **210** may be distributed (e.g., evenly, based on traffic considerations, etc.). Some (or all) of the one or more ground station(s) **215** may be paired with a communication station **210** of the one or more communications station(s) **210**. Furthermore, the one or more ground station(s) **215** may include temporary communication systems that may be available to issues alerts of obstructions of the one or more ground station(s) **215**, so that the obstruction can be removed, etc.

Each of the one or more ground station(s) **215** may include a transponder system, a radar system, and/or a datalink system.

The radar system of a ground station **215** may include a directional radar system. The directional radar system may be pointed upward (e.g., from ground towards sky) and the directional radar system may transmit a beam **220** to provide three-dimensional coverage over a section of a route **141**. The beam **220** may be a narrow beam. The three-dimensional coverage of the beam **220** may be directly above the ground station **215** or at various skewed angles (from a vertical direction). The directional radar system may detect objects, such as aircraft **131**, within the three-dimensional coverage of the beam **220**. The directional radar system may detect objects by skin detection. In the case of the ground station **215** being positioned on a hub, such as the hub **112**, the directional radar system may transmit a beam **225** to provide three-dimensional coverage over the hub **112**. The beam **225** may be also be skewed at an angle (from a vertical direction) to detect objects arriving at, descending to, and landing on the hub **112**. The beams **220**/**225** may be controlled either mechanically (by moving the radar system), electronically (e.g., phased arrays), or by software (e.g., digital phased array "DAPA" radars), or any combination thereof.

The transponder system of a ground station **215** may include an ADS-B and/or a Mode S transponder, and/or other transponder system (collectively, interrogator system). The interrogator system may have at least one directional antenna. The directional antenna may target a section of a route **141**. For instance, targeting the section of the route **141** may reduce the likelihood of overwhelming the ecosystem (e.g., aircraft **131**) with interrogations, as would be the case if the interrogator system used an omnidirectional antenna. The directional antenna may target a specific section of a route **141** by transmitting signals in a same or different beam pattern as the beam **220**/**225** discussed above for the radar system. The interrogator system may transmit interrogation messages to aircraft, such as aircraft **131**, within the section of the route **141**. The interrogation messages may include an identifier of the interrogator system and/or request the aircraft, such as aircraft **131**, to transmit an identification message. The interrogator system may receive the identification message from the aircraft, such as aircraft **131**. The identification message may include an identifier of the aircraft and/or transponder aircraft data (e.g., speed, location, track, etc.) of the aircraft.

If the radar system detects an object and the transponder system does not receive a corresponding identification message from the object (or does receive an identification message, but it is an invalid identification message, e.g., an identifier of un-authorized aircraft), the ground station **215** may determine that the object is an intruder aircraft **230**. The ground station **215** may then transmit an intruder alert message to the cloud service **205**. If the radar system detects an object and the transponder system receives a corresponding identification message from the object, the ground station **215** may determine the object is a valid aircraft. The ground station **215** may then transmit a valid aircraft message to the cloud service **205**. Additionally or alternatively, the ground station **215** may transmit a detection message based on the detection of the object and whether the ground station **215** receives the identification message ("a response message"); therefore, the ground station **215** may not make a determination as to whether the detected object is an intruder aircraft or a valid aircraft, but instead send the detection message to the cloud service **205** for the cloud service **205** to determine whether the detected object is an intruder aircraft or a valid aircraft.

The datalink system of ground station **215** may communicate with at least one of the one or more communications station(s) **210**. Each of the one or more communications station(s) **210** may communicate with at least one of the one or more ground station(s) **215** within a region around the communications station **210** to receive and transmit data from/to the one or more ground station(s) **215**. Some or none of the communications station(s) **210** may not communicate directly with the ground station(s) **215**, but may instead be relays from other communications station(s) **210** that are in direct communication with the ground station(s) **215**. For instance, each of the ground station(s) **215** may communicate with a nearest one of the communications station(s) **210** (directly or indirectly). Additionally or alternatively, the ground station(s) **215** may communicate with a communi-

cations station **210** that has a best signal to the ground station **215**, best bandwidth, etc. The one or more communications station(s) **210** may include a wireless communication system to communicate with the datalink system of ground station(s) **215**. The wireless communication system may enable cellular communication, in accordance with, e.g., 3G/4G/5G standards. The wireless communication system may enable Wi-Fi communications, Bluetooth communications, or other short range wireless communications. Additionally or alternatively, the one or more communications station(s) **210** may communicate with the one or more of the one or more ground station(s) **215** based on wired communication, such as Ethernet, fiber optic, etc.

For instance, a ground station **215** may transmit an intruder alert message or a valid aircraft message (and/or a detection message) to a communications station **210**. The communications station **210** may then relay the intruder alert message or the valid aircraft message (and/or the detection message) to the cloud service **205** (either directly or indirectly through another communications station **210**).

The one or more communications station(s) **210** may also communicate with one or more aircraft, such as aircraft **131**, to receive and transmit data from/to the one or more aircraft. For instance, one or more communications station(s) **210** may relay data between the cloud service **205** and a vehicle, such as aircraft **131**.

The cloud service **205** may communicate with the one or more communications station(s) **210** and/or directly (e.g., via satellite communications) with aircraft, such as aircraft **131**. The cloud service **205** may provide instructions, data, and/or warnings to the aircraft **131**. The cloud service **205** may receive acknowledgements from the aircraft **131**, aircraft data from the aircraft **131**, and/or other information from the aircraft **131**. For instance, the cloud service **205** may provide, to the aircraft **131**, weather data, traffic data, landing zone data for the hubs, such as hubs **111-117**, updated obstacle data, flight plan data, etc. The cloud service **205** may also provide software as a service (SaaS) to aircraft **131** to perform various software functions, such as navigation services, Flight Management System (FMS) services, etc., in accordance with service contracts, API requests from aircraft **131**, etc.

FIGS. **3**A and **3**B depict exemplary block diagrams of a vehicle of a system, according to one or more embodiments. FIG. **3**A may depict a block diagram **300**A and FIG. **3**B may depict a block diagram **300**B, respectively, of a vehicle, such as aircraft **131-133**. Generally, the block diagram **300**A may depict systems, information/data, and communications between the systems of a piloted or semi-autonomous vehicle, while the block diagram **300**B may depict systems, information/data, and communications between the systems of a fully autonomous vehicle. The aircraft **131** may be one of the piloted or semi-autonomous vehicle and/or the fully autonomous vehicle.

The block diagram **300**A of an aircraft **131** may include a vehicle management computer **302** and electrical, mechanical, and/or software systems (collectively, "vehicle systems"). The vehicle systems may include: one or more display(s) **304**; communications systems **306**; one or more transponder(s) **308**; pilot/user interface(s) **324** to receive and communicate information from pilots and/or users **310** of the aircraft **131**; edge sensors **312** on structures **346** of the aircraft **131** (such as doors, seats, tires, etc.); power systems **378** to provide power to actuation systems **360**; camera(s) **316**; GPS systems **354**; on-board vehicle navigation systems **314**; flight control computer **370**; and/or one or more data storage systems. The vehicle management computer **302** and the vehicle systems may be connected by one or a combination of wired or wireless communication interfaces, such as TCP/IP communication over Wi-Fi or Ethernet (with or without switches), RS-422, ARINC-429, or other communication standards (with or without protocol switches, as needed). Generally, the GPS systems **354**, the on-board vehicle navigation systems **314** (collectively or individual components thereof, discussed below), the one or more transponder(s) **308**, and/or the camera(s) **316** (collectively or individual components thereof, discussed below) may be considered a situational awareness system. The situational awareness system may determine: vehicle state (position, speed, orientation, heading, etc. of the navigation information discussed below) and tracking information for nearby entities (airborne vehicles/objects, ground terrain, and/or physical infrastructure, etc. of the imaging output data, data from the one or more transponder(s) **308**, and/or the radar data of the navigation information, discussed below) that may encroach a safety envelope of a vehicle **131**. The situational awareness system may provide the vehicle state and tracking information to the vehicle management computer **302**. The vehicle management computer **302** may use the vehicle state and tracking information to control the actuation systems **360**, in accordance with the flight control program **370** and/or the vertiport status program **372**, as discussed below.

The vehicle management computer **302** may include at least a network interface, a processor, and a memory, each coupled to each other via a bus or indirectly via wired or wireless connections (e.g., Wi-Fi, Ethernet, parallel or serial ATA, etc.). The memory may store, and the processor may execute, a vehicle management program. The vehicle management program may include a weather program **322**, a Detect/Sense and Avoid (D/S & A) program **334**, a flight routing program **344**, a vehicle status/health program **352**, a communications program **368**, a flight control program **370**, and/or a vertiport status program **372** (collectively, "sub-programs"). The vehicle management program may obtain inputs from the sub-programs and send outputs to the sub-programs to manage the aircraft **131**, in accordance with program code of the vehicle management program. The vehicle management program may also obtain inputs from the vehicle systems and output instructions/data to the vehicle systems, in accordance with the program code of the vehicle management program.

The vehicle management computer **302** may transmit instructions/data/graphical user interface(s) to the one or more display(s) **304** and/or the pilot/user interface(s) **324**. The one or more display(s) **304** and/or the pilot/user interface(s) **324** may receive user inputs, and transmit the user inputs to the vehicle management computer **302**.

The communications systems **306** may include various data links systems (e.g., satellite communications systems), cellular communications systems (e.g., LTE, 4G, 5G, etc.), radio communications systems (e.g., HF, VHF, etc.), and/or wireless local area network communications systems (e.g., Wi-Fi, Bluetooth, etc.). The communications systems **306** may also include encryption/decryption functions. The encryption/decryption functions may (1) encrypt outgoing data/messages so that receiving entities may decrypt the outgoing data/messages, while intervening entities may not gain access to the data/messages; and (2) decrypt incoming data/messages so that transmitting entities may encrypt the incoming data/messages, while intervening entities may not gain access to the data/messages. The communications systems **306** may enable communications, in accordance with the communications program **368**, between the aircraft **131**

and external networks, services, and the cloud service **205**, discussed above. An example of the external networks may include a wide area network, such as the internet. Examples of the services may include weather information services **318**, traffic information services, etc.

The one or more transponder(s) **308** may include an interrogator system. The interrogator system of the aircraft **131** may be an ADS-B, a Mode S transponder, and/or other transponder system. The interrogator system may have an omnidirectional antenna and/or a directional antenna (interrogator system antenna). The interrogator system antenna may transmit/receive signals to transmit/receive interrogation messages and transmit/receive identification messages. For instance, in response to receiving an interrogation message, the interrogator system may obtain an identifier of the aircraft **131** and/or transponder aircraft data (e.g., speed, location, track, etc.) of the aircraft **131**, e.g., from the on-board vehicle navigation systems **314**; and transmit an identification message. Contra-wise, the interrogator system may transmit interrogation messages to nearby aircraft; and receive identification messages. The one or more transponder(s) **308** may send messages to the vehicle management computer **302** to report interrogation messages and/or identification messages received from/transmitted to other aircraft and/or the ground station(s) **215**. As discussed above, the interrogation messages may include an identifier of the interrogator system (in this case, the aircraft **131**), request the nearby aircraft to transmit an identification message, and/or (different than above) transponder aircraft data (e.g., speed, location, track, etc.) of the aircraft **131**; the identification message may include an identifier of the aircraft **131** and/or the transponder aircraft data of the aircraft **131**.

The edge sensors **312** on the structures **346** of the aircraft **131** may be sensors to detect various environmental and/or system status information. For instance, some of the edge sensors **312** may monitor for discrete signals, such as edge sensors on seats (e.g., occupied or not), doors (e.g., closed or not), etc. of the aircraft **131**. Some of the edge sensors **312** may monitor continuous signals, such as edge sensors on tires (e.g., tire pressure), brakes (e.g., engaged or not, amount of wear, etc.), passenger compartment (e.g., compartment air pressure, air composition, temperature, etc.), support structure (e.g., deformation, strain, etc.), etc., of the aircraft **131**. The edge sensors **312** may transmit edge sensor data to the vehicle management computer **302** to report the discrete and/or continuous signals.

The power systems **378** may include one or more battery systems, fuel cell systems, and/or other chemical power systems to power the actuation systems **360** and/or the vehicle systems in general. In one aspect of the disclosure, the power systems **378** may be a battery pack. The power systems **378** may have various sensors to detect one or more of temperature, fuel/electrical charge remaining, discharge rate, etc. (collectively, power system data **348**). The power systems **378** may transmit power system data **348** to the vehicle management computer **302** so that power system status **350** (or battery pack status) may be monitored by the vehicle status/health program **352**.

The actuation systems **360** may include: motors, engines, and/or propellers to generate thrust, lift, and/or directional force for the aircraft **131**; flaps or other surface controls to augment the thrust, lift, and/or directional force for the aircraft **131**; and/or aircraft mechanical systems (e.g., to deploy landing gear, windshield wiper blades, signal lights, etc.). The vehicle management computer **302** may control the actuation systems **360** by transmitting instructions, in accordance with the flight control program **370**, and the actuation systems **360** may transmit feedback/current status of the actuation systems **360** to the vehicle management computer **302** (which may be referred to as actuation systems data).

The camera(s) **316** may include inferred or optical cameras, LIDAR, or other visual imaging systems to record internal or external environments of the aircraft **131**. The camera(s) **316** may obtain inferred images; optical images; and/or LIDAR point cloud data, or any combination thereof (collectively "imaging data"). The LIDAR point cloud data may include coordinates (which may include, e.g., location, intensity, time information, etc.) of each data point received by the LIDAR. The camera(s) **316** and/or the vehicle management computer **302** may include a machine vision function. The machine vision function may process the obtained imaging data to detect objects, locations of the detected objects, speed/velocity (relative and/or absolute) of the detected objects, size and/or shape of the detected objects, etc. (collectively, "machine vision outputs"). For instance, the machine vision function may be used to image a landing zone to confirm the landing zone is clear/unobstructed (a landing zone (LZ) status **362**). Additionally or alternatively, the machine vision function may determine whether physical environment (e.g., buildings, structures, cranes, etc.) around the aircraft **131** and/or on/near the routes **141** may be or will be (e.g., based on location, speed, flight plan of the aircraft **131**) within a safe flight envelope of the aircraft **131**. The imaging data and/or the machine vision outputs may be referred to as "imaging output data." The camera(s) **316** may transmit the imaging data and/or the machine vision outputs of the machine vision function to the vehicle management computer **302**. The camera(s) **316** may determine whether elements detected in the physical environment are known or unknown based on obstacle data stored in an obstacle database **356**, such as by determining a location of the detected object and determining if an obstacle in the obstacle database has the same location (or within a defined range of distance). The imaging output data may include any obstacles determined to not be in the obstacle data of the obstacle database **356** (unknown obstacles information).

The GPS systems **354** may include one or more global navigation satellite (GNSS) receivers. The GNSS receivers may receive signals from the United States developed Global Position System (GPS), the Russian developed Global Navigation Satellite System (GLONASS), the European Union developed Galileo system, and/or the Chinese developed BeiDou system, or other global or regional satellite navigation systems. The GNSS receivers may determine positioning information for the aircraft **131**. The positioning information may include information about one or more of position (e.g., latitude and longitude, or Cartesian coordinates), altitude, speed, heading, or track, etc. for the vehicle. The GPS systems **354** may transmit the positioning information to the on-board vehicle navigation systems **314** and/or to the vehicle management computer **302**.

The on-board vehicle navigation systems **314** may include one or more radar(s), one or more magnetometer(s), an attitude heading reference system (AHRS), and/or one or more air data module(s). The one or more radar(s) may be weather radar(s) to scan for weather and/or light weight digital radar(s), such as DAPA radar(s) (either omnidirectional and/or directional), to scan for terrain/ground/objects/obstacles. The one or more radar(s) may obtain radar information. The radar information may include information about the local weather and the terrain/ground/objects/obstacles (e.g., aircraft or obstacles and associated locations/movement). The one or more magnetometer(s) may measure

magnetism to obtain bearing information for the aircraft **131**. The AHRS may include sensors (e.g., three sensors on three axes) to obtain attitude information for the aircraft **131**. The attitude information may include roll, pitch, and yaw of the aircraft **131**. The air data module(s) may sense external air pressure to obtain airspeed information for the aircraft **131**. The radar information, the bearing information, the attitude information, airspeed information, and/or the positioning information (collectively, navigation information) may be transmitted to the vehicle management computer **302**.

The weather program **322** may, using the communications systems **306**, transmit and/or receive weather information from one or more of the weather information services **318**. For instance, the weather program **322** may obtain local weather information from weather radars and the on-board vehicle navigation systems **314**, such as the air data module(s). The weather program may also transmit requests for weather information **320**. For instance, the request may be for weather information **320** along a route **141** of the aircraft **131** (route weather information). The route weather information may include information about precipitation, wind, turbulence, storms, cloud coverage, visibility, etc. of the external environment of the aircraft **131** along/near a flight path, at a destination and/or departure location (e.g., one of the hubs **111-117**), or for a general area around the flight path, destination location, and/or departure location. The one or more of the weather information services **318** may transmit responses that include the route weather information. Additionally or alternatively, the one or more of the weather information services **318** may transmit update messages to the aircraft **131** that includes the route weather information and/or updates to the route weather information.

The D/S & A program **334** may, using the one or more transponders **308** and/or the pilot/user interface(s) **324**, detect and avoid objects that may pose a potential threat to the aircraft **131**. As an example, the pilot/user interface(s) **324** may receive user input(s) from the pilots and/or users of the vehicle **310** (or radar/imaging detection) to indicate a detection of an object; the pilot/user interface(s) **324** (or radar/imaging detection) may transmit the user input(s) (or radar or imaging information) to the vehicle management computer **302**; the vehicle management computer **302** may invoke the D/S & A program **334** to perform an object detection process **328** to determine whether the detected object is a non-cooperative object **332** (e.g., it is an aircraft that is not participating in transponder communication); optionally, the vehicle management computer **302** may determine a position, speed, track for the non-cooperative object **332** (non-cooperative object information), such as by radar tracking or image tracking; in response to determining the object is a non-cooperative object **332**, the vehicle management computer **302** may determine a course of action, such as instruct the flight control program **370** to avoid the non-cooperative object **332**. As another example, the one or more transponder(s) **308** may detect an intruder aircraft (such as intruder aircraft **230**) based on an identification message from the intruder aircraft; the one or more transponder(s) **308** may transmit a message to the vehicle management computer **302** that includes the identification message from the intruder aircraft; the vehicle management computer **302** may extract an identifier and/or transponder aircraft data from the identification message to obtain the identifier and/or speed, location, track, etc. of the intruder aircraft; the vehicle management computer **302** may invoke the D/S & A program **334** to perform a position detection process **326** to determine whether the detected object is a cooperative object **330** and its location, speed, heading, track, etc.; in response to determining the object is a cooperative object **330**, the vehicle management computer **302** may determine a course of action, such as instruct the flight control program **370** to avoid the cooperative object **330**. For instance, the course of action may be different or the same for non-cooperative and cooperative objects **330/332**, in accordance with rules based on regulations and/or scenarios.

The flight routing program **344** may, using the communications systems **306**, generate/receive flight plan information **338** and receive system vehicle information **336** from the cloud service **205**. The flight plan information **338** may include a departure location (e.g., one of the hubs **111-117**), a destination location (e.g., one of the hubs **111-117**), intermediate locations (if any) (e.g., waypoints or one or more of the hubs **111-117**) between the departure and destination locations, and/or one or more routes **141** to be used (or not used). The system vehicle information **336** may include other aircraft positioning information for other aircraft with respect to the aircraft **131** (called a "receiving aircraft **131**" for reference). For instance, the other aircraft positioning information may include positioning information of the other aircraft. The other aircraft may include: all aircraft **131-133** and/or intruder aircraft **230**; aircraft **131-133** and/or intruder aircraft **230** within a threshold distance of the receiving aircraft **131**; aircraft **131-133** and/or intruder aircraft **230** using a same route **141** (or is going to use the same route **141** or crossing over the same route **141**) of the receiving aircraft; and/or aircraft **131-133** and/or intruder aircraft **230** within a same geographic area (e.g., city, town, metropolitan area, or sub-division thereof) of the receiving aircraft.

The flight routing program **344** may determine or receive a planned flight path **340**. The flight routing program **344** may receive the planned flight path **340** from another aircraft **131** or the cloud service **205** (or other service, such as an operating service of the aircraft **131**). The flight routing program **344** may determine the planned flight path **340** using various planning algorithms (e.g., flight planning services on-board or off-board the aircraft **131**), aircraft constraints (e.g., cruising speed, maximum speed, maximum/minimum altitude, maximum range, etc.) of the aircraft **131**, and/or external constraints (e.g., restricted airspace, noise abatement zones, etc.). The planned/received flight path may include a 4-D trajectory of a flight trajectory with 4-D coordinates, a flight path based on waypoints, any suitable flight path for the aircraft **131**, or any combination thereof, in accordance with the flight plan information **338** and/or the system vehicle information **336**. The 4-D coordinates may include 3-D coordinates of space (e.g., latitude, longitude, and altitude) for a flight path and time coordinate.

The flight routing program **344** may determine an unplanned flight path **342** based on the planned flight path **340** and unplanned event triggers, and using the various planning algorithms, the aircraft constraints of the aircraft **131**, and/or the external constraints. The vehicle management computer **302** may determine the unplanned event triggers based on data/information the vehicle management compute **302** receives from other vehicle systems or from the cloud service **205**. The unplanned event triggers may include one or a combination of: (1) emergency landing, as indicated by the vehicle status/health program **352** discussed below or by a user input to one or more display(s) **304** and/or the pilot/user interface(s) **324**; (2) intruder aircraft **230**, cooperative object **330**, or non-cooperative object **332** encroaching on a safe flight envelope of the aircraft **131**; (3) weather changes indicated by the route weather information

(or updates thereto); (4) the machine vision outputs indicating a portion of the physical environment may be or will be within the safe flight envelope of the aircraft **131**; and/or (5) the machine vision outputs indicating a landing zone is obstructed.

Collectively, the unplanned flight path **342**/the planned flight path **340** and other aircraft positioning information may be called flight plan data.

The vehicle status/health program **352** may monitor vehicle systems for status/health, and perform actions based on the monitored status/health, such as periodically report status/health, indicate emergency status, etc. The vehicle may obtain the edge sensor data and the power system data **348**. The vehicle status/health program **352** may process the edge sensor data and the power system data **348** to determine statuses of the power system **378** and the various structures and systems monitored by the edge sensors **312**, and/or track a health of the power system **378** and structures and systems monitored by the edge sensors **312**. For instance, the vehicle status/health program **352** may obtain the power systems data **348**; determine a battery status **350**; and perform actions based thereon, such as reduce consumption of non-essential systems, report battery status, etc. The vehicle status/health program **352** may determine an emergency landing condition based on one or more of the power system **378** and structures and systems monitored by the edge sensors **312** has a state that indicates the power system **378** and structures and systems monitored by the edge sensors **312** has or will fail soon. Moreover, the vehicle status/health program **352** may transmit status/health data to the cloud service **205** as status/health messages (or as a part of other messages to the cloud service). The status/health data may include the actuation systems data, all of the edge sensor data and/or the power system data, portions thereof, summaries of the edge sensor data and the power system data, and/or system status indicators (e.g., operating normal, degraded wear, inoperable, etc.) based on the edge sensor data and the power system data.

The flight control program **370** may control the actuation system **360** in accordance with the unplanned flight path **342**/the planned flight path **340**, the other aircraft positioning information, control laws **358**, navigation rules **374**, and/or user inputs (e.g., of a pilot if aircraft **131** is a piloted or semi-autonomous vehicle). The flight control program **370** may receive the planned flight path **340**/unplanned flight path **342** and/or the user inputs (collectively, "course"), and determine inputs to the actuation system **360** to change speed, heading, attitude of the aircraft **131** to match the course based on the control laws **358** and navigation rules **374**. The control laws **358** may dictate a range of actions possible of the actuation system **360** and map inputs to the range of actions to effectuate the course by, e.g., physics of flight of the aircraft **131**. The navigation rules **374** may indicate acceptable actions based on location, waypoint, portion of flight path, context, etc. (collectively, "circumstance"). For instance, the navigation rules **374** may indicate a minimum/maximum altitude, minimum/maximum speed, minimum separation distance, a heading or range of acceptable headings, etc. for a given circumstance.

The vertiport status program **372** may control the aircraft **131** during take-off (by executing a take-off process **364**) and during landing (by executing a landing process **366**). The take-off process **364** may determine whether the landing zone from which the aircraft **131** is to leave and the flight environment during the ascent is clear (e.g., based on the control laws **358**, the navigation rules **374**, the imaging data, the obstacle data, the unplanned flight path **342**/the planned flight path **340**, the other aircraft positioning information, user inputs, etc.), and control the aircraft or guide the pilot through the ascent (e.g., based on the control laws **358**, the navigation rules **374**, the imaging data, the obstacle data, the flight plan data, user inputs, etc.). The landing process **366** may determine whether the landing zone on which the aircraft **131** is to land and the flight environment during the descent is clear (e.g., based on the control laws **358**, the navigation rules **374**, the imaging data, the obstacle data, the flight plan data, user inputs, the landing zone status, etc.), and control the aircraft or guide the pilot through the descent (e.g., based on the control laws **358**, the navigation rules **374**, the imaging data, the obstacle data, the flight plan data, user inputs, the landing zone status, etc.).

The one or more data storage systems may store data/information received, generated, or obtained onboard the aircraft. The one or more data storage systems may also store software for one or more of the computers onboard the aircraft.

The block diagram **300**B may be the same as the block diagram **300**A, but the block diagram **300**B may omit the pilot/user interface(s) **324** and/or the one or more displays **304**, and include a vehicle position/speed/altitude system **376**. The vehicle position/speed/altitude system **376** may include or not include the on-board vehicle navigation systems **314** and/or the GPS systems **354**, discussed above. In the case that the vehicle position/speed/altitude system **376** does not include the on-board vehicle navigation systems **314** and/or the GPS systems **354**, the vehicle position/speed/altitude system **376** may obtain the navigation information from the cloud service **205**.

FIG. **4** may depict an exemplary system **400** for distributed avionics processing, according to one or more embodiments. The system **400** for distributed avionics processing may be the same as the system **200** depicted in FIG. **2**, except that the system **400** is illustrative of how the aircraft **131**/vehicle **405**, edge nodes **410**, and the cloud service **205** (hereinafter referred to as "cloud node **205**") distribute avionics/vehicle processing to operate the aircraft **131**/vehicle **405**. The aircraft **131**/vehicle **405**, the edge nodes **410**, and the cloud node **205** may each host functionality for the aircraft **131**. In this manner, the vehicle **405** may include all of the features of the aircraft **131** discussed above (while off-boarding some/all data storage and/or some/all non-essential local processing functions as, e.g., processing power savings, memory savings, and/or redundancy), or include less physical infrastructure/software infrastructure and rely on the off-boarding processes to provide the corresponding functionality.

Specifically, the system **400** may be illustrative of partitioning and hosting avionics applications on low latency wireless networks (e.g., such as 5G networks) by offloading computation, storage and other data functions to processing entities on a wireless mobile network edge (such as edge nodes **410**). This method of partitioning and hosting avionics applications may have an advantage of reducing resource requirements (energy, payload, timing constraints) on weight constrained aircraft, such as aircraft **131** or vehicle **405**, used for urban air mobility.

Onboard GNSS, inertial navigation system (IRS), visual sensors (e.g., cameras, LiDAR, etc.), and radio aids (e.g., transponders, radar, etc.) contribute to situational awareness and contribute to maintaining safety of aircraft, such as aircraft **131** and/or vehicle **405**. Current piloted systems have line replaceable units (LRUs) carried on-board to process these inputs and help a pilot ensure safe aviation and navigation. However, for UAM, as mentioned above, air-

craft, such as aircraft **131** and/or the vehicle **405**, may be restricted in space/weight/power. Therefore, to maintain situational awareness and safety, UAM vehicles may host minimal sensor and compute equipment on the aircraft **131**/vehicle **405** and use high-speed low-latency wireless communications to perform processing activities on edge nodes **410**.

Furthermore, current aviation radios may be severely limited in capacity with the expected automation and reduced human intervention in managing UAM type systems. For instance, both controlling systems on ground and piloting systems on aircraft are expected to consume massive amounts of navigation/payload/sensor data in making decisions and maintaining safety. However, the edge nodes **410** may provide the required capacity and other capabilities to support sensor data driven avionics applications. In addition to high data throughput rates, the capability of the edge nodes **410** to provide ultra-reliable low latency connections (URLLC) and edge cloud computing may enable the partitioning of functionality of the aircraft **131**/vehicle **405**.

In one aspect of the disclosure, UAM vehicles, such as the aircraft **131**/vehicle **405**, may offload certain functions to the edge nodes **410** or the cloud node **205**. For instance, the aircraft **131**/vehicle **405** may include (or only include) the actuation systems **360** (discussed above with respect to FIG. **3**A-**3**B) and sensors/payload. The aircraft **131**/vehicle **405** may host only the most-time sensitive functionality, such as sensor/payload data management logic and control logic. The edge nodes **410** may host relatively-slower but tightly coupled processing, such as vehicle management logic, traffic management logic, mission planning logic, navigation logic, etc. The cloud node **205** may host applications that may tolerate larger delays, such as mission payload logic, analytics logic, etc. Moreover, the edge nodes **410** may also host traffic management logic, such as currently performed by air traffic control (ATC) for multiple aircraft **131**/vehicles **405**.

In the case the vehicle **405** includes less physical infrastructure/software infrastructure than the aircraft **131**, the vehicle **405** may include (or only include) a GNSS receiver system **405**A, a processor executing a distributed processing program to execute a distributed processing process (with a memory storing flight data **405**B, payload data, and the distributed processing program), a sensor payload **405**C, and a communication system **405**D. The processor may be a part of, or the processor may be separate from, the GNSS receiver system **405**A and/or the communication system **405**D.

The GNSS receiver system **405**A may perform the same functions as the GPS systems **354**, discussed above. For instance, the GNSS receiver system **405**A may receive signals from one or more GNSS satellites; and determine a position of the vehicle **405**. Moreover, the GNSS receiver system **405**A or the processor of the vehicle **405** may determine a GNSS signal strength based on the received GNSS signals.

The processor of the vehicle **405**, in accordance with the sensor/payload data management logic, may store the flight data **405**B in the memory. The flight data **405**B may be stored in the memory for a flight data buffer period. The flight data buffer period may be: a set period of time, such as a day, an hour or multiple hours, a minute or minutes, or seconds; an entire flight or segments thereof such as between waypoints; more than one flight, etc. The flight data **405**B may include the received GNSS signals and/or the determined position. The flight data **405**B may also include other flight relevant data derived from the GNSS signals (e.g., signal strength, speed, velocity, acceleration, altitude, etc.) and/or the navigation information (or components thereof) from the on-board vehicle navigation systems **314**, if the vehicle **405** has corresponding components.

The sensor payload **405**C may be any one or more of the vehicle systems discussed above with respect FIGS. **3**A-**3**B, such as the camera(s) **316**, the edge sensors **312**, the one or more transponder(s) **308**, the on-board vehicle navigation systems **314**, or sub-components thereof, etc. The sensor payload **405**C may obtain payload data from the one or more of the vehicle systems. The processor of the vehicle **405**, in accordance with the sensor/payload data management logic, may store the payload data on-board the vehicle **405** in the memory. The payload data may be stored in the memory for a payload buffer period. The payload buffer period may be the same or different from the flight data buffer period discussed above.

The processor of the vehicle **405**, in accordance with the sensor/payload data management logic, may store the flight data **405**B and the payload data on-board the vehicle **405** for the flight data buffer period and the payload buffer period, respectively, and then control the communication system **405**D to transmit the stored flight data **405**B/stored payload data to the edge nodes **410** and/or the cloud node **205** (depending, e.g., on type of data). For instance, the transmissions of the stored flight data **405**B/stored payload data may be data messages to the edge nodes **410**.

The communication system **405**D may perform the same functions as the communications systems **306**, discussed above. The communications system **405**D may communicate wirelessly with one or more edge nodes **410** using general wireless standards, such Wi-Fi or, preferably, 5G.

Generally, the vehicle **405** may, in accordance with the control logic, may control the actuation systems **360** in accordance with control instructions from the edge nodes **410**. The control instructions may be transmitted from the edge nodes **410** as control messages. For instance, the control instructions may indicate a speed, altitude, bearing, etc., or the control instructions may indicate a next GPS position. For instance, the control logic may determine whether a current speed/bearing/altitude of the vehicle **405** matches (or is within a threshold) a control speed/bearing/altitude of the control message; in response to the current speed/bearing/altitude of the vehicle **405** matching (or is within the threshold) the control speed/bearing/altitude of the control message, maintain a vehicle state; and in response to the current speed/bearing/altitude of the vehicle **405** not matching (or not within the threshold) the control speed/bearing/altitude of the control message, change the vehicle state to match (or be within the threshold). Likewise, the control logic may determine whether a current GPS position of the vehicle **405** matches (or is within a threshold) a control GPS position of the control message; in response to the current GPS position of the vehicle **405** matching (or is within the threshold) the control GPS position of the control message, maintain a vehicle state; and in response to the current GPS position of the vehicle **405** not matching (or not within the threshold) the control GPS position of the control message, change the vehicle state to match (or be within the threshold).

The control instructions may be generated dynamically by a controlling entity, and sent to the vehicle **405**. The controlling entity may be a currently connected edge node **410** or an edge node **410**/backbone node that has control over the vehicle **405**; therefore, generally, it should be understood that when this disclosure references instructions from an edge node it should be understood that the controlling entity

generates and sends the control instructions and one or more edge nodes **410** relayed the control instructions to the vehicle **405**.

The edge nodes **410** may be the one or more communications station(s) **210** and/or the one or more ground station(s) **215** (or communications stations **210** combined with ground stations **215**). Each of the edge nodes **410** may include an edge cloud **410**A and a node **4106**. Generally, the edge nodes **410** may be connected to each other directly and/or indirectly via the backbone network nodes. The backbone network nodes may be nodes at a higher communication layer than the edge nodes **410** that interface with end user devices (such as the vehicle **405**). In one aspect of the disclosure, the backbone nodes may operate as the cloud edge **410**A for the edge node **410**, and the edge nodes **410** may not have a cloud edge **410**A. For instance, the backbone nodes may execute a "Cloud RAN" for edge nodes **410** that only have radio/antenna, while the backbone nodes may host the avionics functions and baseband signal processing.

The node **410**B may control communication with the vehicle **405**, such as: (1) receiving messages from the vehicle **405** and relaying the messages to the cloud node **205**; (2) receiving messages from the vehicle **405** and relaying the messages to the edge cloud **410**A; (3) receiving messages from the cloud node **205** and relaying the messages to the vehicle **405**; and (4) receiving messages from the edge cloud **410**A and relaying the messages to the vehicle **405**. The node **4106** may also control communication with other edge nodes **410** and/or the cloud node **205**, such as (1) receiving messages from another edge node **410** and relaying the messages to the edge cloud **410**A; (2) receiving messages from the edge cloud **410**A and relaying the messages to the to another edge node **410**; (3) receiving messages from the cloud node **205** and relaying the messages to the edge cloud **410**A; and (4) receiving messages from the edge cloud **410**A and relaying the messages to the cloud node **205**.

The edge cloud **410**A may execute edge cloud functions **415** for the aircraft **131**/vehicle **405**. For instance, the edge cloud functions **415** may include management functions **415**A, situational awareness functions **4156**, weather data functions **415**C, and/or ATC transmissions functions **415**D.

The situational awareness functions **4156** may execute situational awareness logic. The situational awareness functions **415**B may combine relevant contextual information (e.g., aircraft **131**/vehicle **405** health (based on data gathered by the vehicle status/health program **352**, but the vehicle **405** may not host any analytics of the vehicle status/health program **352**), power levels, schedules for flights/routes, traffic levels, etc.), and provide the contextual information to the management functions **415**A.

The weather data functions **415**C may execute weather data logic. The weather data functions **415**C may determine weather information (e.g., local/regional weather conditions/future weather conditions), and provide the weather information to the management functions **415**A (instead of the vehicle **405** hosting the weather program **322** of FIGS. **3**A-**3**B).

The ATC transmissions functions **415**D may execute the traffic management logic. The ATC transmissions functions **415**D may determine ATC information (e.g., positions of/spacing between known aircraft **131**/vehicles and intruder aircraft, e.g., based on ADS-B transmissions/scanning from the one or more ground station(s) **215**), and provide the ATC information to the management functions **415**A (instead of the vehicle **405** hosting (all or part) of the Detect/Sense and Avoid (D/S & A) program **334** of FIGS. **3**A-**3**B).

The management functions **415**A may receive the ATC information from the ATC transmissions functions **415**D, the weather information from the weather data functions **415**C, and/or the contextual information from the situational awareness functions **415**B. The management functions **415**A may also receive position information as reported in position messages from the vehicle **405** (e.g., based on the GNSS receiver system **405**A). In response to receiving the various above-described information (or periodically), the management functions **415** may execute the management logic, the mission planning logic, and the navigation logic. The mission planning logic may execute the flight routing program **344** of FIGS. **3**A-**3**B described above to generate/manage the flight plan data, so that the vehicle **405** does not have to host that logic. The navigation logic may execute the flight control program **370** and the vertiport status program **372** of FIGS. **3**A-**3**B described above to determine the control instructions for the vehicle **405**, so that the vehicle **405** does not have to host that logic. The management logic may receive the control instructions generated by the navigation logic for each vehicle **405** that the edge node **410** has control over; cross-check the control instructions for each vehicle **405** that the edge node **410** has control over, so that conflicts do not arise; generate the control messages to be broadcast to the vehicles **405**; and transmit the control messages, individually or as a broadcast message. The management logic may also cross-check the control instructions against operational ceilings, and a terrain/obstacle database to ensure vehicles **405** are operating in safe/object free trajectories. For instance, the edge node **410** may perform real-time computation and transmission of the control messages (e.g., for optimal paths for each aircraft **131**/vehicle **405**). For instance, the optimal paths may consider the situational context of different destinations for different vehicles **405**. In one aspect of the disclosure, the edge nodes **410** may be waypoints on a defined UAM air pathway, such as the routes **141**, in this manner the edge nodes **410** may be positioned along a flight route of the aircraft **131**/vehicle **405**.

As an example, the vehicle **405** may transmit, in real-time, critical flight and navigation parameters (e.g., GPS position and environment data, such as weather or obstacle detection by the camera(s) **316**) to the edge nodes **410**. The edge nodes **410** may perform the above discussed logic and transmit decisions/directions back to the vehicle **405**. The vehicle **405** may then execute the decisions/directions.

In one aspect of the disclosure, the edge node **410** that is the controlling entity may be: a nearest edge node **410** (e.g., based on GPS position); an edge node **410** that has a smallest round trip latency; an edge node **410** that has more processing power available (but still near enough to the vehicle **405** to be attached). For instance, this may enable minimum round-trip latency and/or processing time (or total time) for the data to be transmitted, processed, and received back as intelligent navigation and safety information.

In another aspect of the disclosure, the controlling entity may be one or more edge nodes **410**, or the one or more edge nodes **410** may host the relevant information (state information for a particular vehicle **405**) and pass responsibility as the controlling entity off-between the edge nodes **410** as the vehicle **405** moves. The state information may be the received payload data, flight data **405**B, associated health/power, etc. information for the particular vehicle **405**. For instance, the state information may be shared among neighboring edge nodes **410** (e.g., in an expected direction of the vehicle **405** (based on flight plan, speed, and time) or within

a threshold distance around a current controlling entity) and be communicated to aircraft **131**/vehicle **405**.

As an example, the controlling entity may know the route **131** that vehicle **405** is using, other neighboring edge nodes **410**, and a state of the transiting vehicle **405**. In the connectivity handover, an on-board modem of the communication system **405**D may assess a link quality (e.g., based on received signal strength indicator (RSSI)) with multiple nearby edge nodes **410**; and attach to the edge node **410** with a best signal-to-noise ratio (SNR). For the handover of the computation tasks, the controlling entity and neighboring edge nodes **410** may be informed (by vehicle **405**) or estimate an impending transition between edge nodes **410**; and facilitate exchange of the state information.

A nominal case may be when the on-board modem of the communication system **405**D is connected to a radio access network (RAN) base-station with a best SNR, which is likely on the nearest edge node **410**. The nearest edge node **410** may be determined to be the controlling entity and host the avionics function for the vehicle **405**.

In another aspect of the disclosure, the vehicle **405** may access and refer to a list of nearby edge nodes **410**; and select an appropriate edge node **410** that can host the avionics function for the vehicle **405**. In this case, the vehicle **405** may transmit a request to the selected edge node **410**.

The cloud node **205** may perform the functions of the cloud service **205** discussed above. For instance, the cloud node **205** may execute cloud functions **420**. The cloud functions **420** may include payload data functions **420**A, data analytics functions **420**B, and/or customer API functions **420**C.

The payload data functions **420**A may store payload data received from the vehicle **405** via the edge nodes **410** that is not sent to/hosted on the edge nodes **410**. For instance, the payload data not sent to/hosted on the edge nodes **410** may be not mission/safety critical, such as long-term position tracking or maintenance data, or data that is no longer relevant to edge nodes **410** for current operations of a vehicle **405** (e.g., edge sensors **312** of a vehicle **405** from last week, etc.). The data analytics functions **420**B may analyze the payload data not sent to/hosted on the edge nodes **410** to generate traffic reports, maintenance, efficiency reports, etc. The customer API functions **420**C may manage communications to and from a relevant user of the vehicle **405**, such as receiving a message to ground the vehicle **405** so that the relevant user can perform maintenance, or provide access to the data analytics functions **420**B.

Turning to the distributed processing program, the vehicle **405**, while executing the distributed processing program, may determine whether one of a first set of trigger conditions, one of a second set of trigger conditions, or one of a third set of trigger conditions are satisfied; in response to determining a first trigger condition of the first set of trigger conditions is satisfied, perform a first process corresponding to the first trigger condition on-board the vehicle **405**; in response to determining a second trigger condition of the second set of trigger conditions is satisfied, prompting a second process corresponding to the second trigger condition by transmitting an edge request to an edge node **410** and receiving an edge response from the edge node **410**; and in response to determining a third trigger condition of the third set of trigger conditions is satisfied, prompting a third process corresponding to the third trigger condition by transmitting a cloud request to the cloud service **205** (referred to hereafter as "cloud node **205**") and receiving a cloud response from the cloud node **205**.

The first set of trigger conditions may include receiving control instructions from an edge node **410** (to initiate a control action in accordance with the control logic); receiving data from the GNSS receiver system **405**A (to be processed, stored, and transmitted to the edge node **410**, in accordance with the sensor/payload data management logic); and receiving data from the sensor payload **405**C (to be processed, stored, and transmitted to the edge node **410**, in accordance with the sensor/payload data management logic). The second set of trigger conditions may include (1) an end of the flight data buffer period and the payload buffer period, for data types that are to be reported to the edge nodes **410**; (2) an impending transition trigger condition for a transition between edge nodes **410**. The third set of trigger conditions may include an end of the flight data buffer period and the payload buffer period, for data types that are to be reported to the cloud node **205**. For instance, position, speed, heading, altitude, etc. of the vehicle **405** may be data types to be reported to the edge nodes **410**, while data from edge sensors **312** of the aircraft **131**/vehicle **405** may be data types to be reported to the cloud node **205**. In response to determining a third trigger condition of the third set of trigger conditions (for various payload data), the vehicle **405** may transmit a payload data off-load message to transmit corresponding data to the cloud node **205**. The impending transition trigger condition may be based on a comparison of SNR of multiple edge nodes **410**, and as a SNR of a second edge node **410**, as compared to a currently attached edge node **410**, is better than, the same as, and/or is within a threshold distance of the SNR of the currently attached edge node **410**, the trigger condition may be satisfied, and the vehicle **405** may transmit an impending transition message to the edge node **410**. Generally, the various payload data types to be reported to the cloud node **205** may have different types of payload buffer periods or the same payload buffer periods. For instance, the payload buffer periods for the various payload data types to be reported to the cloud node **205** may short (e.g., 5, 10, 15 seconds) so that the various payload data types to be reported to the cloud node **205** do not use much buffer space in the memory.

The second set of trigger conditions may further include one or more of: (1) a regular heartbeat (e.g., timer) trigger condition, which triggers a transmission of sensor data to the edge node **410**; (2) Weather Radar, DAPA, Vision trigger conditions: when one of the weather radar, DAPA, or vision systems detect external conditions that may require decisions for control actions, which triggers a transmission of corresponding data from the weather radar, DAPA, or vision systems; (3) detection trigger condition: when a sensor input condition cross static or dynamic thresholds, which triggers a transmission to issue an alert to other dependent systems; (4) augmentation trigger condition: when the vehicle **405** has data that should be augmented by some context specific or location specific remote database information (e.g. weather or air-traffic information specific to a location or time), which triggers a transmission that includes the data to the edge node **410**; (5) stale data trigger condition: when data cached at the edge node **410** being utilized currently for the vehicle **405** becomes stale (e.g., has not been updated in a cache time period), triggers a transmission of an update cached data message; and/or (6) a query trigger condition: when a query initiated by the controlling entity (received through the edge node **410**) requests fresh sensor information, triggers data gathering and transmission of the fresh sensor information to the edge node **410** to the controlling entity.

Furthermore, each of the first set of trigger conditions, the second set of trigger conditions, and the third set of trigger conditions, may include a dynamic priority for the trigger conditions that initiate processing on-board, edge, and cloud, respectively. For example, a distributed service for emergency management can be informational in a normal flight, but can assume highest priority when there is exigency.

Moreover, the vehicle **405** may perform a differential process to override a trigger condition of the second set of trigger conditions and/or the third set of trigger conditions to transmit the message to another one of the second set of trigger conditions and/or the third set of trigger conditions (or a different edge node **410** than a current edge node **410** for the second set of trigger conditions). For instance, the vehicle **405** may track previous transmissions and receipts of instructions to obtain historical data; obtain current system information (speed/bandwidth/etc. of edge nodes **410** nearby/cloud node **205**); and select one of the nearby edge nodes **410** or the cloud node **205** (based on the historical data and current system information (cross-referenced based on type of service to be rendered by the edge node **410**/cloud node **205**) to perform a service. The vehicle **405** may select the one of the nearby edge nodes **410** or the cloud node **205** so that the service may be processed faster and/or more efficient than if processed by another of the nearby nodes **410** or the cloud node **205**. For instance, the cloud node **205** may have substantially more processing power than the edge node **410**, so significant processing tasks may be preferentially performed on the cloud node **205**.

Therefore, generally, the distribution processing of the present disclosure may enable partitioning and hosting avionics applications on low latency wireless networks (e.g., such as 5G networks) by offloading computation, storage and other data functions to processing entities on a wireless mobile network edge (such as the edge nodes **410**). This method of partitioning and hosting avionics applications may have an advantage of reducing resource requirements (energy, payload) on weight constrained aircraft, such as aircraft **131** or vehicle **405**, used for urban air mobility.

FIG. **5** may depict an exemplary flowchart for distributed avionics processing, according to one or more embodiments. The flowchart **500** may depict the distributed processing process, as described above with respect to FIG. **4** above. The flowchart **500** may be performed by the aircraft **131**/vehicle **405**.

The aircraft **131**/vehicle **405** may start the process of flowchart **500** to determine whether one (or more) of a first set of trigger conditions is satisfied (block **505**). For instance, the aircraft **131**/vehicle **405** may receive a control message from an edge node **410**, as discussed above. In response to determining that one (or more) (e.g., a first trigger condition) of the first set of trigger conditions is satisfied (block **505**: Yes), the aircraft **131**/vehicle **405** may perform a first process corresponding to the first trigger condition on-board the aircraft **131**/vehicle **405** (block **510**). The aircraft **131**/vehicle **405** may then proceed to determine whether one (or more) of a first set of trigger conditions is satisfied (block **505**).

In response to determining that none of the first set of trigger conditions are satisfied (block **505**: No), the aircraft **131**/vehicle **405** may proceed to determine whether one (or more) of a second set of trigger conditions are satisfied (block **515**). For instance, the aircraft **131**/vehicle **405** may determine whether position information is to be transmitted to an edge node **410** as a flight data buffer period has ended or an impending transition trigger condition has been satisfied, as discussed above. In response to determining that one (or more) (e.g., a second trigger condition) of the second set of trigger conditions is satisfied (block **515**: Yes), the aircraft **131**/vehicle **405** may prompt a second process corresponding to the second trigger condition by transmitting an edge request to the edge node **410** and receiving an edge response from the edge node **410** (block **520**). For instance, the aircraft **131**/vehicle **405** may transmit the position information to the edge node **410** or the impending transition message, as discussed above. The edge response may be a confirmation of receipt, so that the aircraft **131**/vehicle **405** may delete the data from its memory, or a control message (thus invoking, e.g., a first trigger condition). The aircraft **131**/vehicle **405** may then proceed to determine whether one (or more) of a first set of trigger conditions is satisfied (block **505**).

In response to determining that none of the second set of trigger conditions are satisfied (block **515**: No), the aircraft **131**/vehicle **405** may proceed to determine whether one (or more) of a third set of trigger conditions are satisfied (block **525**). For instance, the aircraft **131**/vehicle **405** may determine the end of the flight data buffer period and the payload buffer period, for data types that are to be reported to the cloud node **205**, as discussed above. In response to determining that one (or more) (e.g., a third trigger condition) of the third set of trigger conditions is satisfied (block **525**: Yes), the aircraft **131**/vehicle **405** may prompt a third process corresponding to the third trigger condition by transmitting a cloud request to the cloud node **205** and receiving a cloud response from the cloud node **205** (block **530**). For instance, the aircraft **131**/vehicle **405** may transmit a payload data off-load message, as discussed above. The cloud response may be a confirmation of receipt, so that the aircraft **131**/vehicle **405** may delete the data from its memory. The aircraft **131**/vehicle **405** may then proceed to determine whether one (or more) of a first set of trigger conditions is satisfied (block **505**).

In response to determining that none of the third set of trigger conditions are satisfied (block **515**: No), the aircraft **131**/vehicle **405** may proceed to determine whether one (or more) of the first set of trigger conditions are satisfied (block **505**).

One of skill in the art would recognize that this process, while depicted as being performed in a conditional-serial manner for each of first, second, and third sets of trigger conditions, could also be performed in a parallel manner without conditional linking between the first, second, and third sets of trigger conditions.

FIG. **6** may depict an exemplary system **600** for distributed avionics processing for supplemental navigation, according to one or more embodiments. The system **600** for distributed avionics processing for supplemental navigation may be the same as the system **200** depicted in FIG. **2** and the system **400** depicted in FIG. **4**, except that the system **600** is illustrative of how the aircraft **131**/vehicle **405**/vehicle **605** and a localization service **610** distribute avionics/vehicle processing to provide supplemental navigation data to the aircraft **131**/vehicle **405**/vehicle **605**. The aircraft **131**/vehicle **405**/vehicle **605** may work together to more precisely determine a position of an aircraft **131**/vehicle **405**/vehicle **605**. In this manner, the vehicle **605** may better navigate urban environments that usually have de-graded GNSS signals. The vehicle **605** may include all of the features of the aircraft **131** discussed above (again, while off-boarding some/all data storage and/or some/all non-essential local processing functions as, e.g., processing power/memory savings and/or redundancy), or include the

features of vehicle **405** with less physical infrastructure/software infrastructure and rely on the off-boarding processes to provide the corresponding functionality.

In the case the vehicle **605** includes less physical infrastructure/software infrastructure, the vehicle **605** may include (or only include) a navigation system **605**A and a sensor system **605**B. The navigation system **605**A may include an on-board position system **605**A-**1**, a controller **605**A-**2**, and/or a supplemented navigation system **605**A-**3**. The sensor system **605**B may include a first sensor **605**B-**1**, a second sensor **605**B-**2**, and/or a third sensor **605**B-**3**. A processor executing a supplemental navigation processing program (stored in a memory) may be included in the navigation system **605**A (e.g., as the controller **605**A-**2**), or in a separate component of the vehicle **605**. The supplemental navigation processing program may cause the processor of the vehicle **605** to execute a client-side of a supplemental navigation process, meanwhile the edge node **410** or the cloud node **205** may execute a node-side of the supplemental navigation process.

The on-board position system **605**A-**1** may include the GNSS receiver system **405**A and/or an IRS to determine a position based on GNSS signals integrated/corrected by inertial navigation methods. The controller **605**A-**2** may output a final position for the control logic to control the vehicle **605** in accordance with control instructions (as discussed below with regards to the navigation control process). The final position may be determined: based solely on the on-board position system **605**A-**1** (e.g., if the GNSS signal is above a threshold); based on the on-board position system **605**A-**1** and an output from the supplemented navigation system **605**A-**3**; based solely on the output from the supplemented navigation system **605**A-**3**. The supplemented navigation system **605**A-**3** may determine when and where a navigation supplementation request message is to be transmitted (or always send it, e.g., every set period of time).

In general, the vehicle **605**, while executing a client-side of the supplemental navigation process, may: obtain reference data from one or a combination of a first sensor, a second sensor, and a third sensor of the vehicle **605**; transmit a navigation supplementation request message including the reference data to an edge node **410** or a cloud node **205**; in response to receiving a resolved position message, perform a navigation control process based on the determined position.

The first sensor of the vehicle **605** may be an imaging system, such as camera(s) **316**. The second sensor of the vehicle may be an antenna system, such as an ADS-B or communication system **405**D. The third sensor may be a radar system, such as the one or more radars of the on-board vehicle navigation systems **314**. Generally, the first sensor **605**B-**1**, the second sensor **605**B-**2**, and the third sensor **605**B-**3** may, each respectively, have multiple sensors for each of the sensor types so that the vehicle **605** may have built in redundancy.

To obtain the reference data from the one or a combination of a first sensor, a second sensor, and a third sensor of the vehicle **605**, the vehicle **605**, in accordance with the sensor/payload data management logic, may: control the imaging system, the antenna system, and/or the radar system of the vehicle **605** to gather reference data. The reference data may include: (1) one or more images from the camera(s) **316** (as discussed above with respect to FIGS. **3**A-**3**B); (2) ADS-B information indicating positions of buildings, ground stations, and/or other vehicles based on received ADS-B messages; (3) beacon information based on beacon messages from smart buildings/edge nodes **410** indicating a range (based on, e.g., phase coded messaging formats) and a position/position ID associated with the position received using the communication system **405**D; and/or (4) range information indicating range readings to objects being tracked by the one or more radars.

The supplemented navigation system **605**A-**3** of the vehicle **605** may, before transmitting the navigation supplementation request message and in response to obtaining the reference data, determine whether a GNSS signal is below a threshold; and in response to determining the GNSS signal is below the threshold (e.g., determine to send request), transmit the navigation supplementation request message. Alternatively, the supplemented navigation system **605**A-**3** of the vehicle **605** may, before transmitting the navigation supplementation request message and before obtaining the reference data, determine whether the GNSS signal is below the threshold; and in response to determining the GNSS signal is below the threshold (e.g., determine to send request if reference data is obtained), obtain the reference data; and in response to obtaining the reference data, transmit the navigation supplementation request message.

The supplemented navigation system **605**A-**3** may generate the navigation supplementation request message; and transmit the navigation supplementation request message to an edge node **410** or the cloud node **205**. To generate the navigation supplementation request message, the supplemented navigation system **605**A-**3** may, in accordance with sensor/payload data management logic, filter reference data from a set period of time (e.g., the last 5 seconds or last minute, etc.); combine the filtered reference data with a vehicle identification (ID); and instruct a communication system of the vehicle **605**, such as the communication system **405**D, to transmit the combined filtered reference data with the vehicle ID.

The supplemented navigation system **605**A-**3** may also determine where to send the request. For instance, the supplemented navigation system **605**A-**3** may determine to transmit an edge request and/or cloud request to the edge node **410** or cloud node **205**, depending on data type. For instance, edge nodes **410** may not host image processing for every known reference image, so that request may be sent to the cloud node **205**. However, edge nodes **410** may host reference images for buildings/structures within a threshold distance of the edge node **410**, so the vehicle **605** may transmit an edge request if a vehicle position of the vehicle **605** is within the threshold distance of a particular edge node **410**. For instance, specific edge nodes **410** may be selected according to a service merit based selection scheme. The selected edge nodes **410** may host the full image processing, meanwhile the non-selected edge nodes **410** may not host image processing or may host only partial image processing.

For instance, edge nodes **410** may perform: (1) trilateration processing and dependent position processing; (2) full image processing, trilateration processing, dependent position processing; or (3) partial image processing, trilateration processing, dependent position processing. Full image processing may be for all known reference images for buildings/structures, while partial image processing may for known reference images for buildings/structures within a threshold distance of the edge node **410**. The cloud node **205** may perform: (1) full image processing, trilateration processing, dependent position processing; or (2) partial image processing, trilateration processing, dependent position processing. In the case the cloud node **205** perform partial image processing, the cloud node **205** may only use a sub-set (e.g., within a threshold time/distance of last known time/position of the vehicle **605**) of all known reference images

for buildings/structures in the analysis so as to reduce processing time/processing power. The vehicle **605** may have an index associating edge nodes **410** with what processing the edge nodes **410** may be able to perform. If the vehicle **605** is attached to an edge node **410**, or close enough to request another edge node **410** (directly or indirectly through the edge node it is attached to), the vehicle **605** may determine what reference data types are in the filtered reference data; and select an edge node **410** (from the index) that can provide the most types of processing (based on the index), and/or select the cloud node **205** (e.g., if none of the edge nodes nearby have full or partial image processing and the reference data has image data).

To perform the navigation control process based on the determined position (or, resolved position in the resolved position message, if more than one process determines a position), the vehicle **605** may continue following a previous control message (or currently received control message, e.g., in the resolved position message, if the localization service is also a controlling entity, as discussed above with respect to FIGS. **4-5**), in accordance with the control logic discussed above with respect to FIGS. **4-5**,

The localization service **610** may include interface functions **610**A (e.g., an API interface/gateway that handles requests from the aircraft **131**/vehicle **405**/vehicle **605**). The localization service **610** may also execute one or more functions to determine a position of a vehicle **605**. The one or more functions may include an image processing function **610**B, a trilateration function **610**C, and a dependent position function **610**D, which are described below with respect to FIGS. **7**A-**7**C. The interface functions **610**A may manage communications between the localization service **610** and the vehicle **605**. For instance, the interface functions **610**A may act as an API interface/gateway that handles requests from the aircraft **131**/vehicle **405**/vehicle **605**, and transmits responses to the aircraft **131**/vehicle **405**/vehicle **605**.

The edge node **410** or the cloud node **205** (as the localization service **610**) may execute a node-side of the supplemental navigation process. The edge node **410** or the cloud node **205**, while executing the node-side of the supplemental navigation processing program, may: in response to receiving a navigation supplementation request message from a vehicle **605**, perform a position resolution process to determine a position of the vehicle **605** by one or more functions; and transmit a resolved position message including the determined position of the vehicle **605** to the vehicle **605**.

To perform the position resolution process to determine the position of the vehicle **605** by the one or more functions, the edge node **210** or the cloud node **205** may extract reference data and vehicle ID from the received navigation supplementation request message; determine whether the reference data includes one or more of: (1) one or more images; (2) ADS-B information; (3) beacon information; and/or (4) range information.

The edge node **210** or the cloud node **205** may: in response to the reference data including ADS-B information (for entities that have known positions, such as ground stations **215**) and/or the beacon information, invoke trilateration processing; in response to the reference data including the ADS-B information and/or the range information, invoke dependent position processing; and in response to the reference data including the one or more images, invoke image processing.

FIGS. **7**A-**7**C may depict exemplary system environments for distributed avionics processing for supplemental navigation, according to one or more embodiments. Specifically, FIGS. **7**A-**7**C depict illustrative system embodiments to explain the one or more functions used by the edge node **210** or the cloud node **205** to determine a position of the vehicle **605**.

Turning to FIG. **7**A, the trilateration function **610**C (to execute the trilateration processing) may: obtain the ADS-B information (for entities that have known positions, such as ground stations **215**) and/or the beacon information; obtain positions **705**A, **705**B, **705**C from the ADS-B information (for entities that have known positions, such as ground stations **215**) and/or the beacon information (or reference database) for the entities associated with the ADS-B information and/or the beacon information; determine ranges **705**A-**2**, **705**B-**2**, **705**C-**2** for the ADS-B information and/or the beacon information from the entities to the vehicle **605**; and based on the positions **705**A, **705**B, **705**C and the ranges **705**A-**2**, **705**B-**2**, **705**C-**2**, triangulate the position of the vehicle **605** using trilateration, such as true range multilateration or pseudorange multilateration.

Alternatively or additionally, smart buildings and/or edge nodes **410** may estimate the range to aircraft **131**/vehicle **605** and report to the localization service **610**. Similarly, other aircraft **131**/vehicles **605** may also report ranges to other aircraft **131**/vehicles **605** flying near them. Using the reported ranges (and positions from the reporting entities that have known positions), the localization service **610** may triangulate positions of every object (aircraft **131**/vehicles **605**).

Moreover, the localization service **610** may execute error detection and exclusion algorithms to identify faulty measurements to avoid inaccuracies. For instance, if the ranges estimated by a device are wrong (e.g., if it is faulty all the ranges reported by that device would be wrong), the device may be excluded; known positions may be used as another technique to find errors when a determined position is different from a known position for a smart building/edge node **410**; if a range estimated by one of the aircraft **131**/vehicles **605** to a known building/edge node **410** is wrong, it may be monitor and it may be excluded after confirming. Furthermore, in the case one aircraft **141**/vehicle **605** may not be able to determine its own position (e.g., due to malfunction), then other aircraft **131**/vehicles **605** may determine the failed aircraft's position for emergency rescue.

Turning to FIG. **7**B, the dependent position function **610**D (to execute the dependent position processing) may: obtain the ADS-B information and/or the range information; obtain positions **720**A-**1**, **720**B-**1**, **720**C-**1** for entities **720**A, **720**B, **720**C, respectively; obtain ranges between neighboring entities **720**A-**2**, **720**B-**2**, **720**C-**2** for each of the entities **720**A, **720**B, **720**C; and determine a positions of vehicle **715** (in this case, vehicle **605** that transmitted the navigation supplementation request message) based on the positions **720**A-**1**, **720**B-**1**, **720**C-**1** for entities **720**A, **720**B, **720**C, respectively and the ranges between neighboring entities **720**A-**2**, **720**B-**2**, **720**C-**2** for each of the entities **720**A, **720**B, **720**C. For instance, UAM vehicles may be sequenced on a sky-lane (e.g., routes **131**) and position estimation for vehicle **715** may be estimated by knowing the range and position of trailing or leading vehicles.

Turning to FIG. **7**C, the image processing function **610**B (to execute the imaging processing) may: obtain the one or more images **725**, **730**, and **735**; and process the images for known reference **730**A; if known reference **730**A is found in an image (this case, image **730**), obtain a known position of the known reference **730**A may be obtained (e.g., by referring to a database and finding a corresponding position based on known reference ID); determine range and orien-

tation from known reference **730**A by performing image analysis on images before and after the image **730** in which the known reference **730**A is detected; and estimate position of vehicle **605** based on the range and the orientation.

For instance, the image processing function **610**B may use unique images of city structures and neural networks (e.g., deep learning) to match city structures. For instance, as UAM vehicles, such as aircraft **131**/vehicle **605**, may travel in predetermined paths (e.g., routes **131**), the neural network may learn to label specific buildings along the routes **131**; as/after the neural network is trained, the neural network may indicate an image of the one or more images contains a specific building along the route **131**. The respective position of the specific building may be retrieved based on an output of the neural network.

In another aspect of the disclosure, the localization service **610** may vote/filter (if more than process is used to determine a position of the vehicle **605**). For instance, to filter positions, from among the determined positions, the localization service **610** may group determined positions that are within a threshold distance of each; exclude outliers (e.g., determined positions that no other determined position concurs is within the threshold distance); and average remaining determined positions. Alternatively, to vote, the localization service **610** may average the determined positions with/without filtering to exclude outliers. For instance, the localization service **610** may determine a median of the determined positions if there are three (or an odd number of) processes used to determine a position of the vehicle **605** (e.g., the corresponding sensors are able to obtain useful data); the localization service **610** may determine an average of the determined positions if there are two (or an even number of) processes used to determine a position of the vehicle **605** (e.g., the corresponding sensors are able to obtain useful data). The location service **610** may set the average/median position as a resolved position for the vehicle **605**; generate the resolved position message (that includes the resolved position and the vehicle ID); and transmit the resolved position message to the vehicle **605**. Moreover, the localization service **610** may also determine a health metric of the resolved position that indicates a confidence of the resolved position and/or of the sensors ability to obtain useful data. For instance, the localization service **610** may determine the health metric if a majority (e.g., three out of five, two out of three) sensors indicate a determined position within a threshold of each other.

Therefore, generally, the methods and systems of the present disclosure may enable the use of low cost onboard navigation sensors because they may be supplemented by known references and images. Moreover, precise position information may be obtained in de-graded GNSS signal regions by cross-referencing multiple data sources, thereby improving failure margin as multiple means of supplementing navigation are used. Furthermore, as the methods and systems of the present disclosure rely on the benefit of path planning in UAM (with the routes **131**), specific beacons and known references may be used and/or learned over time.

FIG. **8** may depict an exemplary flowchart for distributed avionics processing for supplemental navigation, according to one or more embodiments. The flowchart **800** may depict the supplemental navigation process, as described above with respect to FIG. **6** above. The flowchart **800** may be performed by the aircraft **131**/vehicle **405**/vehicle **605** (e.g., blocks **805**, **810**, **830**, and **835**), and the edge node **410** or the cloud node **205** (e.g., blocks **815**, **820**, and **825**). The aircraft **131**/vehicle **405**/vehicle **605** may start the process of flowchart **800** to obtain reference data from one or a combination of an imaging system, an antenna system, and/or a radar system of the vehicle (block **805**).

The aircraft **131**/vehicle **405**/vehicle **605** may then proceed to transmit a navigation supplementation request message including the reference data to the edge node **410** or the cloud node **205** (block **810**). The edge node **410** or cloud node **205** may then proceed to receive the navigation supplementation request message from the aircraft **131**/vehicle **405**/vehicle **605** (block **815**).

The edge node **410** or cloud node **205** may then proceed to perform a position resolution process to determine a position of the aircraft **131**/vehicle **405**/vehicle **605** by one or more functions (block **820**). For instance, the edge node **410** or cloud node **205** may execute the image processing, trilateration processing, and/or the dependent position processing, as discussed above. The edge node **410** or cloud node **205** may then proceed to transmit a resolved position message including the determined position of the aircraft **131**/vehicle **405**/vehicle **605** to the aircraft **131**/vehicle **405**/vehicle **605** (block **825**). The aircraft **131**/vehicle **405**/vehicle **605** may then proceed to receive the resolved position message (block **830**).

The aircraft **131**/vehicle **405**/vehicle **605** may then proceed to perform a navigation control process based on the determined position (block **835**). For instance, the aircraft **131**/vehicle **605** may control the vehicle **605** in accordance with the control logic and a control instruction, as discussed above.

FIG. **9** may depict an exemplary flowchart for distributed avionics processing for supplemental navigation, according to one or more embodiments. The flowchart **900** may depict a more detailed supplemental navigation process, as described above with respect to FIG. **6** above. The flowchart **900** may be performed by the aircraft **131**/vehicle **405**/vehicle **605** (e.g., blocks **905**, **910**, **915**, and **945**), and the edge node **410** or the cloud node **205** (e.g., blocks **920**, **925**, **930**, **935**, and **940**).

The aircraft **131**/vehicle **405** may start the process of flowchart **900** to perform onboard sensor localization (block **905**). For instance, the aircraft **131**/vehicle **405**/vehicle **605** may determine a position using the on-board position system **605**A-**1**, as discussed above. The aircraft **131**/vehicle **405**/vehicle **605** may then proceed to (e.g., if a GNSS signal is below a threshold) to acquire reference data (block **910**). The aircraft **131**/vehicle **405**/vehicle **605** may then proceed to transmit ownship ID (e.g., the vehicle ID) and the acquired reference data to the edge node **410** or the cloud node **205** (block **915**). The edge node **410** or cloud node **205** may then proceed to perform a position resolution process to determine a position of the aircraft **131**/vehicle **405**/vehicle **605** by one or more functions (block **920**). The edge node **410** or cloud node **205** may then proceed to determine whether the position of the aircraft **131**/vehicle **405**/vehicle **605** is determined by one or more of the functions (block **925**).

In response to determining the position of the aircraft **131**/vehicle **405**/vehicle **605** is determined by one or more functions (block **925**: Yes), the edge node **410** or cloud node **205** may then proceed to perform a voting/filtering process per requester ID (block **930**). The edge node **410** or cloud node **205** may then proceed to transmit a resolved position and requester ID to the aircraft **131**/vehicle **405**/vehicle **605** (block **935**). In response to determining the position of the aircraft **131**/vehicle **405**/vehicle **605** has not been determined by one or more means (block **925**: No), the edge node

410 or cloud node 205 may then proceed to transmit an error message to the aircraft 131/vehicle 405/vehicle 605 (block 940).

The aircraft 131/vehicle 405/vehicle 605 may then proceed to determine whether a resolved position has been received (block 945). For instance, the aircraft 131/vehicle 405/vehicle 605 may determine whether a position resolution message has been received, as discussed above.

In response to determining a resolved position has not been received (block 945: No), the aircraft 131/vehicle 405/vehicle 605 may then proceed to (1) send another request (block 945) and/or (2) wait for an error message or resolved position from the edge node 410 or the cloud node 205 (by allowing the process of blocks 920-940 to execute again). In response to determining a resolved position has been received (block 945: Yes), the aircraft 131/vehicle 405/vehicle 605 may then proceed to perform onboard sensor localization (block 905).

FIG. 10 depicts an example system that may execute techniques presented herein. FIG. 10 is a simplified functional block diagram of a computer that may be configured to execute techniques described herein, according to exemplary embodiments of the present disclosure. Specifically, the computer (or "platform" as it may not a be a single physical computer infrastructure) may include a data communication interface 1060 for packet data communication. The platform may also include a central processing unit ("CPU") 1020, in the form of one or more processors, for executing program instructions. The platform may include an internal communication bus 1010, and the platform may also include a program storage and/or a data storage for various data files to be processed and/or communicated by the platform such as ROM 1030 and RAM 1040, although the system 1000 may receive programming and data via network communications. The system 1000 also may include input and output ports 1050 to connect with input and output devices such as keyboards, mice, touchscreens, monitors, displays, etc. Of course, the various system functions may be implemented in a distributed fashion on a number of similar platforms, to distribute the processing load. Alternatively, the systems may be implemented by appropriate programming of one computer hardware platform.

The general discussion of this disclosure provides a brief, general description of a suitable computing environment in which the present disclosure may be implemented. In one embodiment, any of the disclosed systems, methods, and/or graphical user interfaces may be executed by or implemented by a computing system consistent with or similar to that depicted and/or explained in this disclosure. Although not required, aspects of the present disclosure are described in the context of computer-executable instructions, such as routines executed by a data processing device, e.g., a server computer, wireless device, and/or personal computer. Those skilled in the relevant art will appreciate that aspects of the present disclosure can be practiced with other communications, data processing, or computer system configurations, including: Internet appliances, hand-held devices (including personal digital assistants ("PDAs")), wearable computers, all manner of cellular or mobile phones (including Voice over IP ("VoIP") phones), dumb terminals, media players, gaming devices, virtual reality devices, multi-processor systems, microprocessor-based or programmable consumer electronics, set-top boxes, network PCs, mini-computers, mainframe computers, and the like. Indeed, the terms "computer," "server," and the like, are generally used interchangeably herein, and refer to any of the above devices and systems, as well as any data processor.

Aspects of the present disclosure may be embodied in a special purpose computer and/or data processor that is specifically programmed, configured, and/or constructed to perform one or more of the computer-executable instructions explained in detail herein. While aspects of the present disclosure, such as certain functions, are described as being performed exclusively on a single device, the present disclosure may also be practiced in distributed environments where functions or modules are shared among disparate processing devices, which are linked through a communications network, such as a Local Area Network ("LAN"), Wide Area Network ("WAN"), and/or the Internet. Similarly, techniques presented herein as involving multiple devices may be implemented in a single device. In a distributed computing environment, program modules may be located in both local and/or remote memory storage devices.

Aspects of the present disclosure may be stored and/or distributed on non-transitory computer-readable media, including magnetically or optically readable computer discs, hard-wired or preprogrammed chips (e.g., EEPROM semiconductor chips), nanotechnology memory, biological memory, or other data storage media. Alternatively, computer implemented instructions, data structures, screen displays, and other data under aspects of the present disclosure may be distributed over the Internet and/or over other networks (including wireless networks), on a propagated signal on a propagation medium (e.g., an electromagnetic wave(s), a sound wave, etc.) over a period of time, and/or they may be provided on any analog or digital network (packet switched, circuit switched, or other scheme).

Program aspects of the technology may be thought of as "products" or "articles of manufacture" typically in the form of executable code and/or associated data that is carried on or embodied in a type of machine-readable medium. "Storage" type media include any or all of the tangible memory of the computers, processors or the like, or associated modules thereof, such as various semiconductor memories, tape drives, disk drives and the like, which may provide non-transitory storage at any time for the software programming. All or portions of the software may at times be communicated through the Internet or various other telecommunication networks. Such communications, for example, may enable loading of the software from one computer or processor into another, for example, from a management server or host computer of the mobile communication network into the computer platform of a server and/or from a server to the mobile device. Thus, another type of media that may bear the software elements includes optical, electrical and electromagnetic waves, such as used across physical interfaces between local devices, through wired and optical landline networks and over various airlinks. The physical elements that carry such waves, such as wired or wireless links, optical links, or the like, also may be considered as media bearing the software. As used herein, unless restricted to non-transitory, tangible "storage" media, terms such as computer or machine "readable medium" refer to any medium that participates in providing instructions to a processor for execution.

The terminology used above may be interpreted in its broadest reasonable manner, even though it is being used in conjunction with a detailed description of certain specific examples of the present disclosure. Indeed, certain terms may even be emphasized above; however, any terminology intended to be interpreted in any restricted manner will be

overtly and specifically defined as such in this Detailed Description section. Both the foregoing general description and the detailed description are exemplary and explanatory only and are not restrictive of the features, as claimed.

As used herein, the terms "comprises," "comprising," "having," including," or other variations thereof, are intended to cover a non-exclusive inclusion such that a process, method, article, or apparatus that comprises a list of elements does not include only those elements, but may include other elements not expressly listed or inherent to such a process, method, article, or apparatus.

In this disclosure, relative terms, such as, for example, "about," "substantially," "generally," and "approximately" are used to indicate a possible variation of ±10% in a stated value.

The term "exemplary" is used in the sense of "example" rather than "ideal." As used herein, the singular forms "a," "an," and "the" include plural reference unless the context dictates otherwise.

Other embodiments of the disclosure will be apparent to those skilled in the art from consideration of the specification and practice of the invention disclosed herein. It is intended that the specification and examples be considered as exemplary only, with a true scope and spirit of the invention being indicated by the following claims.

What is claimed is:

1. A method for distributed vehicle processing for a vehicle, comprising:

determining whether one of a first set of trigger conditions, one of a second set of trigger conditions, or one of a third set of trigger conditions are satisfied;

in response to determining a first trigger condition of the first set of trigger conditions is satisfied, performing a first process corresponding to the first trigger condition on-board the vehicle;

in response to determining a second trigger condition of the second set of trigger conditions is satisfied, prompting a second process corresponding to the second trigger condition by transmitting an edge request to an edge node and receiving an edge response from the edge node; and

in response to determining a third trigger condition of the third set of trigger conditions is satisfied, prompting a third process corresponding to the third trigger condition by transmitting a cloud request to a cloud node and receiving a cloud response from the cloud node.

2. The method of claim **1**, wherein the first set of trigger conditions include:

receiving control instructions from the edge node;

receiving data from a GNSS receiver system; and

receiving data from a sensor payload.

3. The method of claim **1**, wherein the second set of trigger conditions include:

an end of a flight data buffer period or a payload buffer period for data types that are to be reported to the edge node;

an impending transition trigger condition for a transition between the edge node and a second edge node;

a regular heartbeat trigger condition;

one or more of weather radar trigger conditions, digital adaptive phased array radar trigger conditions, or vision trigger conditions;

detection trigger conditions;

augmentation trigger condition;

stale data trigger conditions; and/or

a query trigger condition.

4. The method of claim **1**, wherein the third set of trigger conditions include an end of a flight data buffer period or a payload buffer period for data types that are to be reported to the cloud node.

5. The method of claim **1**, wherein the vehicle includes actuation systems, one or more sensors, and/or payload systems, the vehicle is configured to host time sensitive functionality including sensor/payload data management logic and control logic,

the edge node is one of a plurality of edge nodes, the edge node is configured to host vehicle management logic, traffic management logic, mission planning logic, and/or navigation logic for the vehicle, and

the cloud node is configured to host mission payload logic and/or analytics logic.

6. The method of claim **5**, wherein the edge node is a controlling entity of the vehicle that issues control instructions to the vehicle, and the edge node is:

a nearest edge node of the plurality of edge nodes to the vehicle;

an edge node of the plurality of edge nodes that has a smallest round trip latency; and/or

an edge node of the plurality of edge nodes that has more processing power available than other nearby edge nodes that are able to be connected to by the vehicle.

7. The method of claim **6**, wherein the controlling entity is changed to another edge node of the plurality of edge nodes by passing state information of the vehicle to the another edge node, the another edge node is determined based on an expected direction of the vehicle and/or a threshold distance around the edge node.

8. A system for distributed vehicle processing for a vehicle, the system comprising:

a memory storing instructions; and

a processor executing the instructions to perform a process including:

determining whether one of a first set of trigger conditions, one of a second set of trigger conditions, or one of a third set of trigger conditions are satisfied;

in response to determining a first trigger condition of the first set of trigger conditions is satisfied, performing a first process corresponding to the first trigger condition on-board the vehicle;

in response to determining a second trigger condition of the second set of trigger conditions is satisfied, prompting a second process corresponding to the second trigger condition by transmitting an edge request to an edge node and receiving an edge response from the edge node; and

in response to determining a third trigger condition of the third set of trigger conditions is satisfied, prompting a third process corresponding to the third trigger condition by transmitting a cloud request to a cloud node and receiving a cloud response from the cloud node.

9. The system of claim **8**, wherein the first set of trigger conditions include:

receiving control instructions from the edge node;

receiving data from a GNSS receiver system; and

receiving data from a sensor payload.

10. The system of claim **8**, wherein the second set of trigger conditions include:

an end of a flight data buffer period or a payload buffer period for data types that are to be reported to the edge node;

an impending transition trigger condition for a transition between the edge node and a second edge node;

a regular heartbeat trigger condition;

one or more of weather radar trigger conditions, digital adaptive phased array radar trigger conditions, or vision trigger conditions;

detection trigger conditions;

augmentation trigger condition;

stale data trigger conditions; and/or

a query trigger condition.

11. The system of claim **8**, wherein the third set of trigger conditions include an end of a flight data buffer period or a payload buffer period for data types that are to be reported to the cloud node.

12. The system of claim **8**, wherein the vehicle includes actuation systems, one or more sensors, and/or payload systems, the vehicle is configured to host time sensitive functionality including sensor/payload data management logic and control logic,

the edge node is one of a plurality of edge nodes, the edge node is configured to host vehicle management logic, traffic management logic, mission planning logic, and/or navigation logic for the vehicle, and

the cloud node is configured to host mission payload logic and/or analytics logic.

13. The system of claim **12**, wherein the edge node is a controlling entity of the vehicle that issues control instructions to the vehicle, and the edge node is:

a nearest edge node of the plurality of edge nodes to the vehicle;

an edge node of the plurality of edge nodes that has a smallest round trip latency; and/or

an edge node of the plurality of edge nodes that has more processing power available than other nearby edge nodes that are able to be connected to by the vehicle.

14. The system of claim **13**, wherein the controlling entity is changed to another edge node of the plurality of edge nodes by passing state information of the vehicle to the another edge node, the another edge node is determined based on an expected direction of the vehicle and/or a threshold distance around the edge node.

15. A non-transitory computer-readable medium storing instructions that, when executed by a processor, cause the processor to perform a method for distributed vehicle processing for a vehicle, the method comprising:

determining whether one of a first set of trigger conditions, one of a second set of trigger conditions, or one of a third set of trigger conditions are satisfied;

in response to determining a first trigger condition of the first set of trigger conditions is satisfied, performing a first process corresponding to the first trigger condition on-board the vehicle;

in response to determining a second trigger condition of the second set of trigger conditions is satisfied, prompting a second process corresponding to the second trigger condition by transmitting an edge request to an edge node and receiving an edge response from the edge node; and

in response to determining a third trigger condition of the third set of trigger conditions is satisfied, prompting a third process corresponding to the third trigger condition by transmitting a cloud request to a cloud node and receiving a cloud response from the cloud node.

16. The non-transitory computer-readable medium of claim **15**, wherein the first set of trigger conditions include:

receiving control instructions from the edge node;

receiving data from a GNSS receiver system; and

receiving data from a sensor payload.

17. The non-transitory computer-readable medium of claim **15**, wherein the second set of trigger conditions include:

an end of a flight data buffer period or a payload buffer period for data types that are to be reported to the edge node;

an impending transition trigger condition for a transition between the edge node and a second edge node;

a regular heartbeat trigger condition;

one or more of weather radar trigger conditions, digital adaptive phased array radar trigger conditions, or vision trigger conditions;

detection trigger conditions;

augmentation trigger condition;

stale data trigger conditions; and/or

a query trigger condition.

18. The non-transitory computer-readable medium of claim **15**, wherein the third set of trigger conditions include an end of a flight data buffer period or a payload buffer period for data types that are to be reported to the cloud node.

19. The non-transitory computer-readable medium of claim **15**, wherein the vehicle includes actuation systems, one or more sensors, and/or payload systems, the vehicle is configured to host time sensitive functionality including sensor/payload data management logic and control logic,

the edge node is one of a plurality of edge nodes, the edge node is configured to host vehicle management logic, traffic management logic, mission planning logic, and/or navigation logic for the vehicle, and

the cloud node is configured to host mission payload logic and/or analytics logic.

20. The non-transitory computer-readable medium of claim **19**, wherein the edge node is a controlling entity of the vehicle that issues control instructions to the vehicle, and the edge node is:

a nearest edge node of the plurality of edge nodes to the vehicle;

an edge node of the plurality of edge nodes that has a smallest round trip latency; and/or

an edge node of the plurality of edge nodes that has more processing power available than other nearby edge nodes that are able to be connected to by the vehicle.

* * * * *