No. 699,699. Patented May 13, 1902.

S. B. NEWBERRY.

MEASURED FEED APPARATUS.

(Application filed Feb. 4, 1901.)

(No Model.)

Fig. 1.

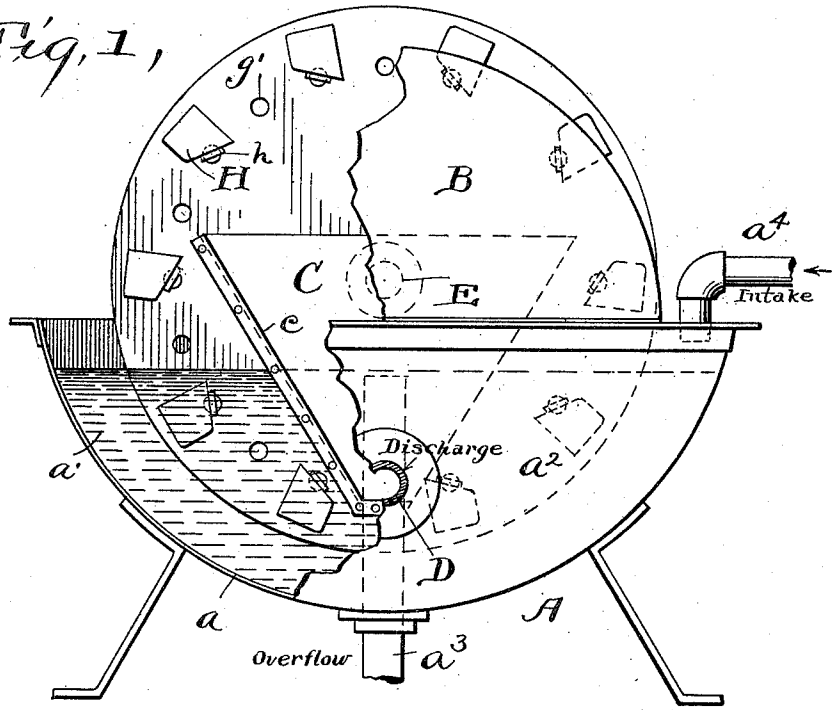

Fig. 2.

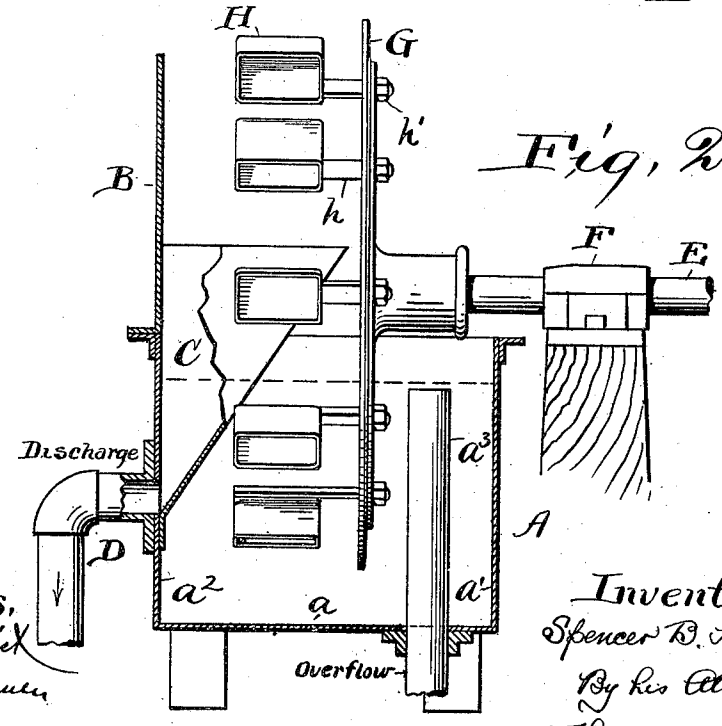

Witnesses,
E. B. Gilchrist
F. D. Cummer

Inventor,
Spencer B. Newberry,
By his Attorneys,
Thurston & Bates.

THE NORRIS PETERS CO., PHOTO-LITHO., WASHINGTON, D. C.

UNITED STATES PATENT OFFICE.

SPENCER B. NEWBERRY, OF SANDUSKY, OHIO, ASSIGNOR TO THE SANDUSKY PORTLAND CEMENT COMPANY, OF SANDUSKY, OHIO, A CORPORATION OF WEST VIRGINIA.

MEASURED-FEED APPARATUS.

SPECIFICATION forming part of Letters Patent No. 699,699, dated May 13, 1902.

Application filed February 4, 1901. Serial No. 46,011. (No model.)

To all whom it may concern:

Be it known that I, SPENCER B. NEWBERRY, a citizen of the United States, residing at Sandusky, in the county of Erie and State of Ohio, have invented a certain new and useful Improvement in Measured-Feed Apparatus, of which the following is a full, clear, and exact description, reference being had to the accompanying drawings.

This invention relates to apparatus for supplying measured quantities of material, and is particularly adapted for this function when used in cement manufacturing to supply the slurry or liquid raw material to the cement-kilns. It has been my object to produce an apparatus of this class combining simplicity with means for readily adapting the same to feed different measured quantities. I do this independently of the speed at which the apparatus is operated, whereby the desired accuracy is attained without complex governing mechanism.

The invention consists in the means I employ to accomplish the above ends and may be conveniently summarized as consisting in certain construction and combination of parts more fully described hereinafter and definitely set forth in the claims.

In the drawings, which fully illustrate my invention, Figure 1 is a side elevation of an approved embodiment thereof, parts being shown broken away to disclose the interior. Fig. 2 is a vertical section through the same, the rotating parts being shown in elevation, as will appear.

Referring to the parts by letters, A represents a vessel or tub, which may be of any form, but preferably constructed as shown, with a bottom a of substantially semicircular outline and two parallel sides a' a^2. The tub is provided with an overflow-pipe a^3, having its mouth so located as to maintain the contents of the vessel at a considerable depth, as shown. A suitable intake-pipe a^4 affords means for keeping this tub supplied with material.

The side a^2 of the tub A is provided with a splash-board B, which forms substantially an extension of that side, and a hopper C is secured to the splash-board and side a^2 upon their inner surface, as shown. The sides c of the hopper are inclined, as shown, and at or near the bottom of this hopper is provided a discharge-pipe D.

A horizontal shaft E, mounted in a suitable bearing, as F, carries a frame or disk G, rigidly secured at its inner end, and this disk is adapted to carry a varying number of buckets or scoops H. These buckets are removably carried on one side of the disk and are capable of angular adjustment thereon, so that their capacity may be regulated. I prefer to provide a number of openings g' in this disk for this purpose and provide the scoops H with laterally-projecting arms h, adapted to take through the same and be secured by nuts h'. These scoops are fixed in such relation to the disk G that when the same is rotated they will fill themselves with the material M contained within the tub and will discharge their contents into the hopper C in the course of each revolution, and it will be observed that the particular construction of the hopper C and arrangements of the overhanging buckets supported only at one side enables the buckets to pass readily beneath the hopper and to discharge directly into it, thus minimizing the floor-space necessary and economizing structural material, simplifying the construction, and at the same time rendering it more efficient.

In practice I rotate the shaft E at a constant velocity and regulate the feed by taking off or putting on more buckets H. This is simpler and at the same time more accurate than to vary the speed, which would require governing mechanism adapted to maintain the rotation constant for a number of rates of speed. As illustrated by the drawings, more openings g' are provided than normally used, so that the number of buckets may be increased as well as diminished as desired.

In operation the liquid material is fed through the intake-pipe and maintained at a constant level within the tub by the overflow, wherefore the amount of material caught up by a given number of buckets and discharged into the hopper will be substantially constant.

What I claim is—

1. In a measured-feed apparatus, the combination of a rotatable disk, a plurality of impervious buckets removably carried on one side of said disk and capable of angular adjustment thereon whereby the capacity is regulated, a tub into which said buckets dip in the lower portion of their travel, a hopper within the tub into which said buckets discharge in the upper portion of their travel, and an overflow-pipe for preserving a constant level in the tub, substantially as described.

2. In a measured-feed apparatus, in combination, a metal tub, a hopper formed by a metal plate riveted to the inner side thereof, a rotatable disk extending into said tub, a shaft carrying said disk, a plurality of removable impervious buckets secured to said disk by arms passing through openings in the disk, an admission-pipe and an overflow-pipe for said tub, substantially as described.

In testimony whereof I hereunto affix my signature in the presence of two witnesses.

SPENCER B. NEWBERRY.

Witnesses:
B. MARTIN,
W. C. SPRAU.