M. F. SITTA.

WINDOW.

APPLICATION FILED NOV. 11, 1914.

1,145,274. Patented July 6, 1915.

2 SHEETS—SHEET 1.

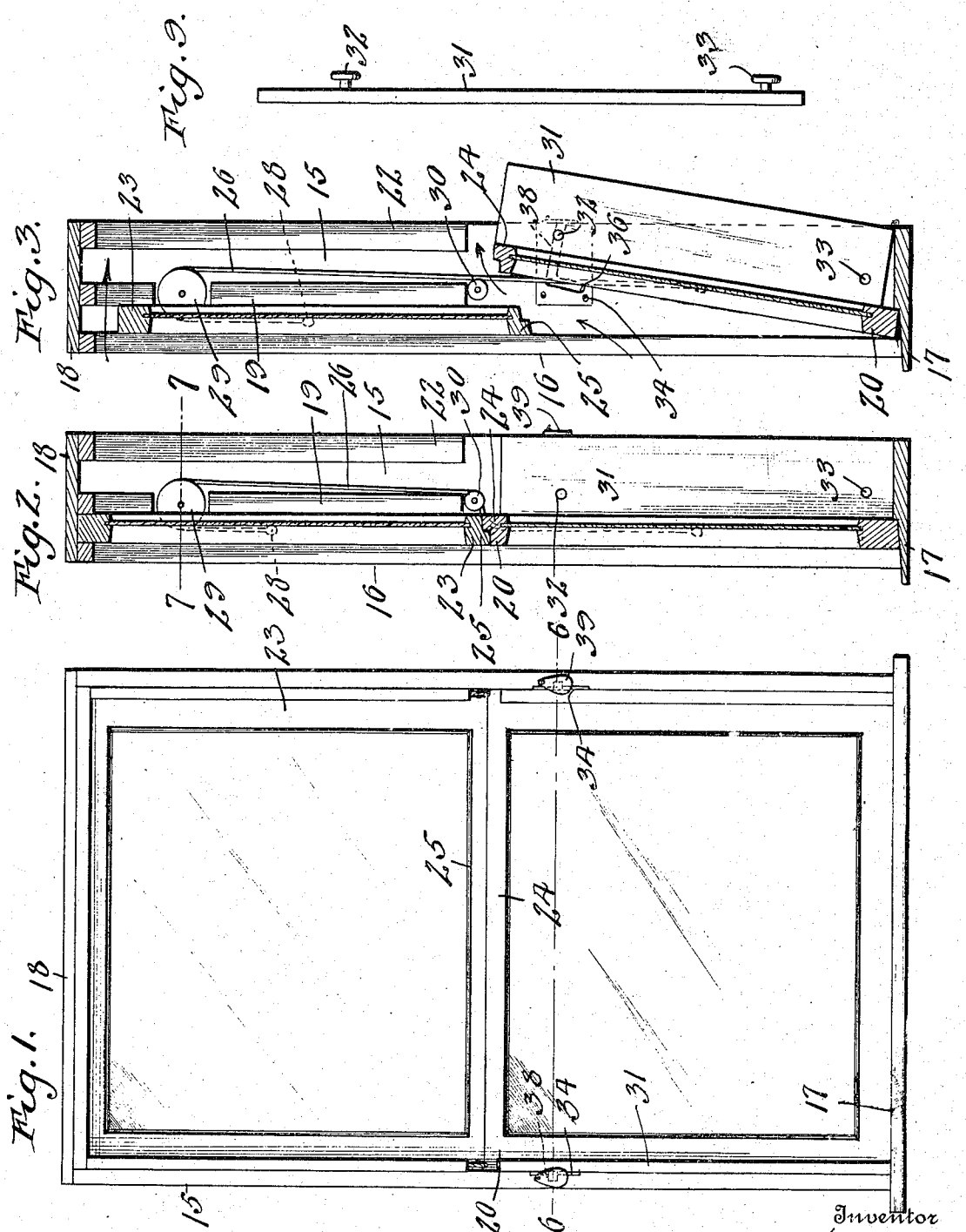

Inventor

M. F. Sitta

Witnesses

E. Ordeuse Jr.

Wm. Bagger

By Victor J. Evans

Attorney

M. F. SITTA.

WINDOW.

APPLICATION FILED NOV. 11, 1914.

1,145,274.

Patented July 6, 1915.

2 SHEETS—SHEET 2.

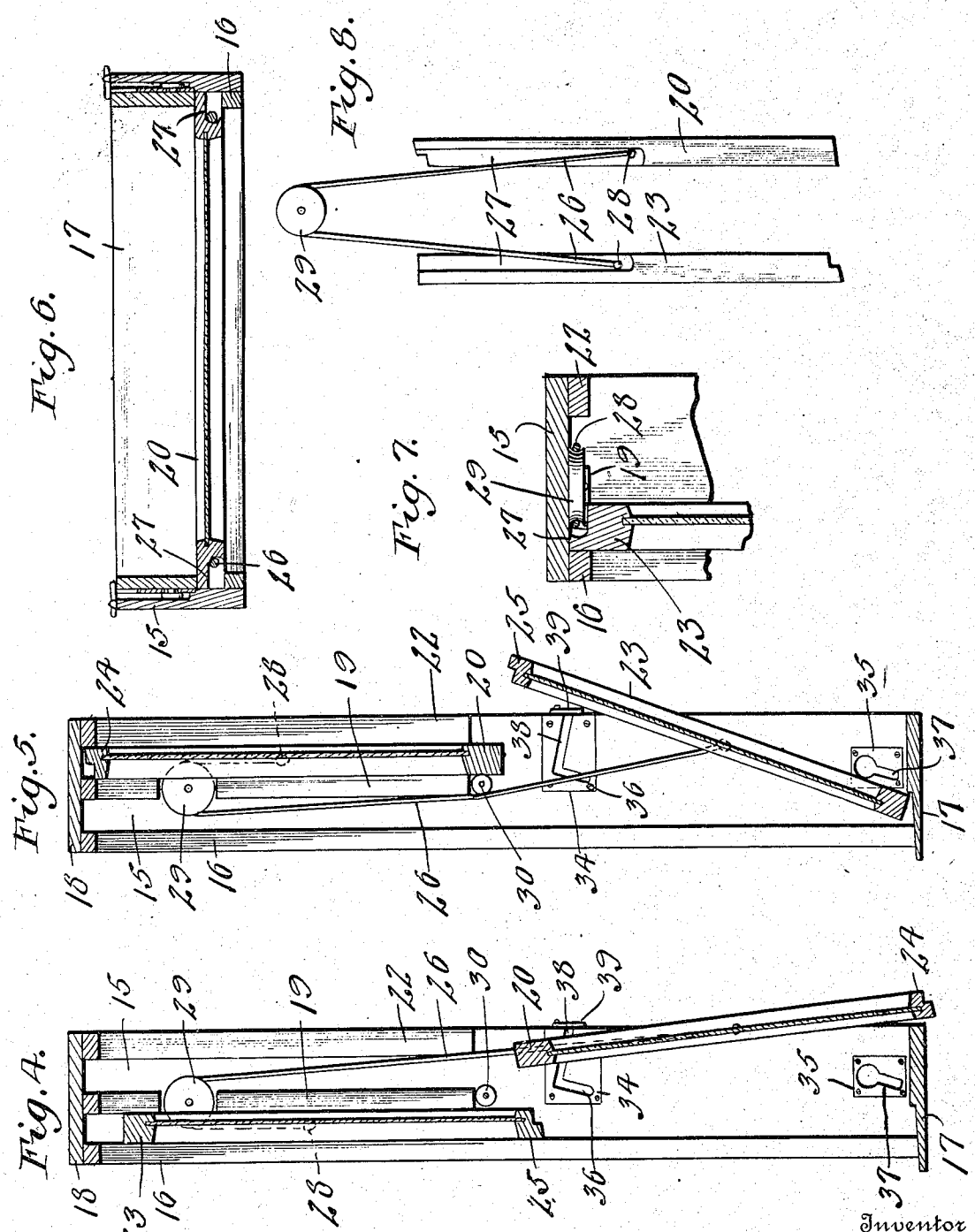

Inventor

M. F. Sitta,

Witnesses

E. Ardeuser Jr.

Wm. Bagger,

By Victor J. Evans

Attorney

UNITED STATES PATENT OFFICE.

METHOD F. SITTA, OF CHICAGO, ILLINOIS.

WINDOW.

1,145,274. Specification of Letters Patent. Patented July 6, 1915.

Application filed November 11, 1914. Serial No. 871,548.

To all whom it may concern:

Be it known that I, METHOD F. SITTA, a citizen of the United States, residing at Chicago, in the county of Cook and State of Illinois, have invented new and useful Improvements in Windows, of which the following is a specification.

This invention relates to windows of that class which are provided with sashes that may be raised and lowered.

The invention has for its object to produce a window of simple and inexpensive construction wherein the sashes, when closed, will be disposed one above the other in substantially the same plane, and wherein provision is made for ventilation by tilting the lower sash inward and at the same time automatically lowering the upper sash in a substantially automatic manner.

A further object of the invention is to produce a window of this class in which the sashes may be conveniently reversed or turned over to provide for cleaning the outer faces of the glasses from the inside of the room.

A further object of the invention is to produce a window of the class described wherein provision shall be made for tightening the sashes against rattling and against leakage of air when desired.

With these and other ends in view which will readily appear as the nature of the invention is better understood, the same consists in the improved construction and novel arrangement and combination of parts which will be hereinafter fully described and particularly pointed out in the claims.

In the accompanying drawings has been illustrated a simple and preferred form of the invention, it being, however, understood that no limitation is necessarily made to the precise structural details therein exhibited, but that changes, alterations and modifications within the scope of the claims may be resorted to when desired.

In the drawings,—Figure 1 is an elevation of the improved window as seen from the inside of a room. Fig. 2 is a vertical sectional view taken on the line 2—2 in Fig. 1, and showing the sashes closed. Fig. 3 is a view similar to Fig. 2, but showing the sashes partly opened for ventilation. Fig. 4 is a view similar to Figs. 2 and 3, but showing the bottom sash reversed for cleaning. Fig. 5 is a view similar to Figs. 2, 3 and 4, but showing the top sash lowered and reversed for cleaning. Fig. 6 is a horizontal sectional view taken on the line 6—6 in Fig. 1. Fig. 7 is a sectional detail view taken somewhat above the line 7—7 in Fig. 2. Fig. 8 is a side view, showing the two window sashes detached from the frame or casing, and showing also the sash cord whereby they are connected and the pulley over which said cord is guided. Fig. 9 is a perspective detail view of one of the slides coöperating with the window casing.

Corresponding parts in the several figures are denoted by like characters of reference.

The sides 15 of the window frame are provided with outer beads 16 which extend all the way from the sill 17 to the cap 18. Parting beads 19 are also used, but said parting beads only extend from the cap about half way down toward the sill in order that the bottom sash 20 may be tilted inward beneath said parting beads, as will be hereafter described. The inner beads or moldings 22 also extend from the cap, but terminate about midway between the cap and sill. The top sash 23 is normally positioned between the outer beads and the parting beads in the upper portion of the window frame, and the bottom sash when closed is positioned directly beneath the top sash, abutting on the outer beads, the meeting rails 24, 25 of the bottom and top sashes, respectively, being jointed together to form a weather-proof joint.

The sashes are connected together at each side by a sash cord 26, the two ends of which are connected respectively with the side rails of the lower and upper sashes about midway between the top and bottom of each sash, the connections being effected in such a way as to permit the sashes to swing pivotally thereon. The side rails of the sashes are each provided with a groove 27 that extends upwardly from the point 28 at which the sash cord is connected with the side rail in order to accommodate said sash cord. Each sash cord is trained over a guide pulley 29 near the top of the window frame, said pulley being located midway between the outer and inner beads, a portion of the parting bead having been cut away for the accommodation thereof,

said pulley being also of such a diameter that the ends of the cord guided thereover will normally lie about midway between the parting bead and the outer and inner beads, respectively. The sash cord 26 is also adapted to be guided beneath a pulley 30 located directly below and closely adjacent to the lower end of the parting bead 19.

Each side of the window casing is equipped with a slide 31, said movable bead member being positioned beneath the parting bead 19 and molding 22. Each bead member 31 is provided with headed studs 32, 33 that are guided in slots in the sides of the casing, said slots being protected by correspondingly slotted facing plates 34, 35. The slots 36, 37 are inclined downwardly and outwardly, and the slot 36 in the upper facing plate has an inward extension 38 from the upper end thereof which terminates flush with the inner face of the window casing where it is protected by a pivoted guard plate 39. It will be seen that when the headed studs 32 of the bead member 31 are guided in the slots 36, 37, pressure in a downward direction on the slide will force it downwardly and outwardly against the lower sash, assuming the latter to be in position, thus forcing the said lower sash outward against the outer bead 16 and holding it tightly so as to prevent rattling and leakage. At the same time, the lower end of the upper sash will be forced in an outward direction, owing to the existence of the joint between the meeting rails, and the upper sash will thus to a large degree be held tightly and securely against rattling and leakage.

When the window is closed, the upper sash will be positioned directly above the lower sash and in approximately the same vertical plane, the meeting rails having their opposed faces contacting with each other. When in this position the sash cord leading from the lower sash will be deflected horizontally by the guide member 30, causing an intermediate portion of said sash cord to lie in an approximately horizontal position. Should it be desired to partly open the window for ventilating purposes, the bead members 31 may be first moved upward to the limit of the slots 36, 37, after which said bead members may be tilted in an inward direction until the upper guide studs 32 are arrested by the guard plate 39. The bottom sash 20 may now be swung inward, as seen in Fig. 3. The sash cord at each side will thus become slackened to some extent, that portion thereof which previously was positioned between the guide member 30 and the upper end of the bottom sash being straightened out in alinement with the remaining portions of the sash cord, and the top sash will thus be permitted to drop gravitationally to some extent permitting air to enter in an upward direction between the lower portion of the top sash and the upper portion of the bottom sash and also above the top sash. Increased ventilation will be provided by partly raising the bottom sash between the parting bead 19 and the molding 22, thus permitting the top sash to be correspondingly lowered. By swinging the guard plates 39 on their pivots the upper ends of the bead members 31 may be swung inward and downward, thus permitting the bottom sash to be swung pivotally about the ends of the sash cord and presenting the outer side inward for cleaning purposes, as seen in Fig. 4. By raising the bottom sash to its full extent, the top sash will be correspondingly lowered, and said top sash may now be swung pivotally, as seen in Fig. 5, for the purpose of cleaning the outer face thereof.

As will be seen from the foregoing description, taken in connection with the drawings hereto annexed, I have provided a window of very simple and inexpensive construction wherein sash weights, springs and other cumbersome and expensive accessories are dispensed with, as well as the expensive construction of the window frame which is necessary in order to provide pockets for the sash weights when the latter are used.

A very valuable feature of the invention resides in the facility with which either the bottom or the top sash may be inverted for the purpose of cleaning the outer face thereof.

The general construction is simple and inexpensive, as well as thoroughly efficient for the purposes for which it is provided.

Having thus described the invention, what is claimed as new, is:—

1. In a window, a casing, pulleys arranged at the upper portion of said casing and guide pulleys arranged below the first named pulleys, in combination with a top and a bottom sash and cords connecting said sashes and secured to the sashes at intermediate points of their heights, said cords passing over the pulleys at the upper portion of the casing and beneath the guide pulleys, whereby pressure in an outward direction on the bottom sash when at its lowest position will tension the cords to exert a lifting action on the top sash.

2. In a window, a casing, a pulley arranged at the upper portion of said casing, and a guide pulley arranged below the first named pulley, in combination with a top and a bottom sash, and a cord connecting said sashes and secured to the sashes at intermediate points of their heights, said cord passing over the pulley at the upper portion of the casing and beneath the guide pulley, and an inside bead slidably and pivotally mounted so that the upper end of the bead may be moved inward to engage a stop, said bead be-

ing movable downwardly and outwardly in the direction of the bottom sash to force the same into alinement with the top sash, thereby tensioning the sash cords by forcing portions thereof outward beneath the guide pulleys and therebv exerting upward tension on the top sash.

In testimony whereof I affix my signature in presence of two witnesses.

METHOD F. SITTA.

Witnesses:
H. K. MUELLER,
GEORGE W. CORPE.