Aug. 27, 1940. P. A. NOXON ET AL 2,212,548

TELEGRAPH KEYBOARD MECHANISM

Filed Aug. 14, 1937 3 Sheets-Sheet 1

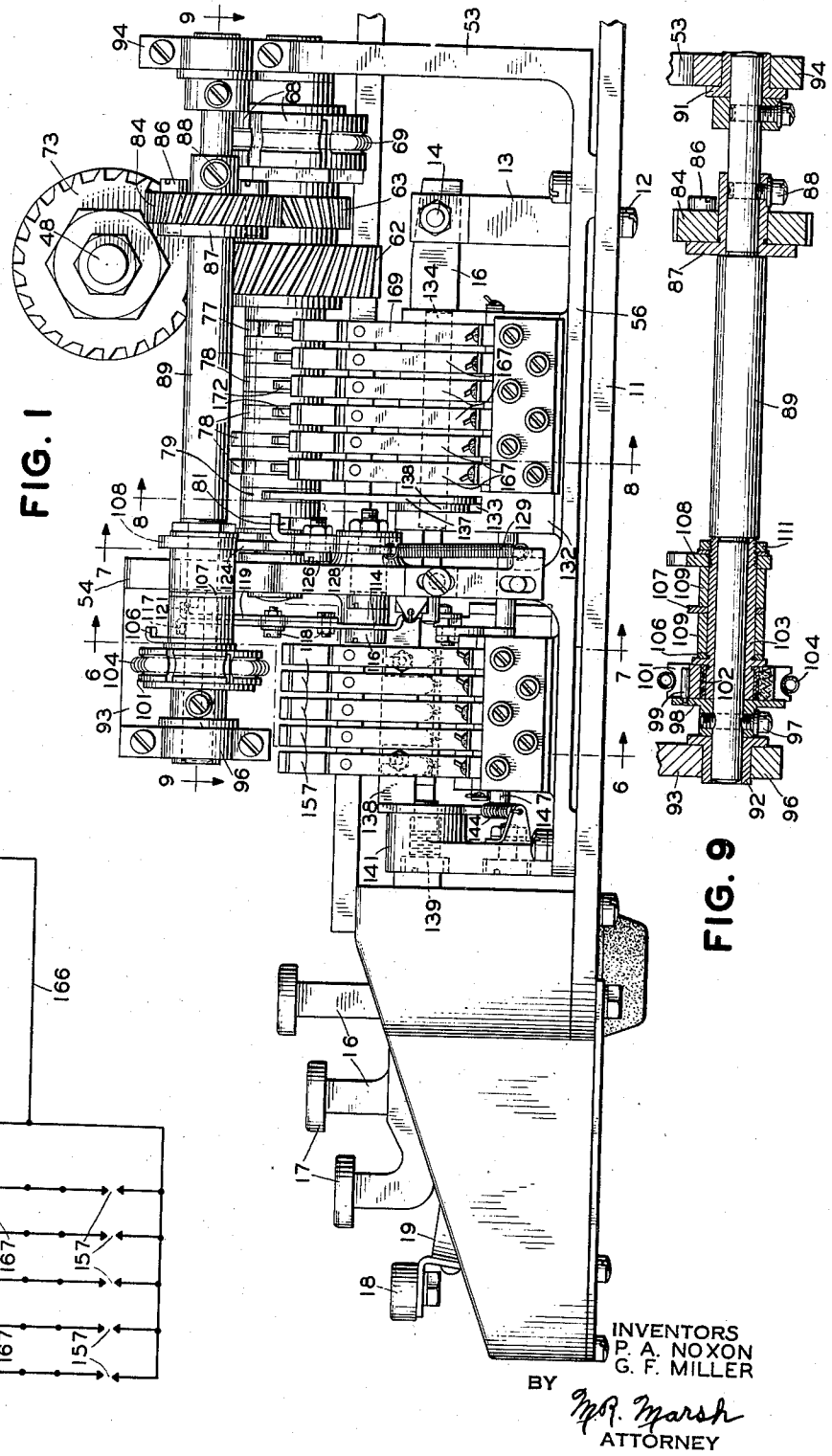

FIG. 1



FIG. 9




FIG. 10

INVENTORS
P. A. NOXON
G. F. MILLER

BY M. R. Marsh
ATTORNEY

Aug. 27, 1940. P. A. NOXON ET AL 2,212,548

TELEGRAPH KEYBOARD MECHANISM

Filed Aug. 14, 1937 3 Sheets-Sheet 2

FIG. 2

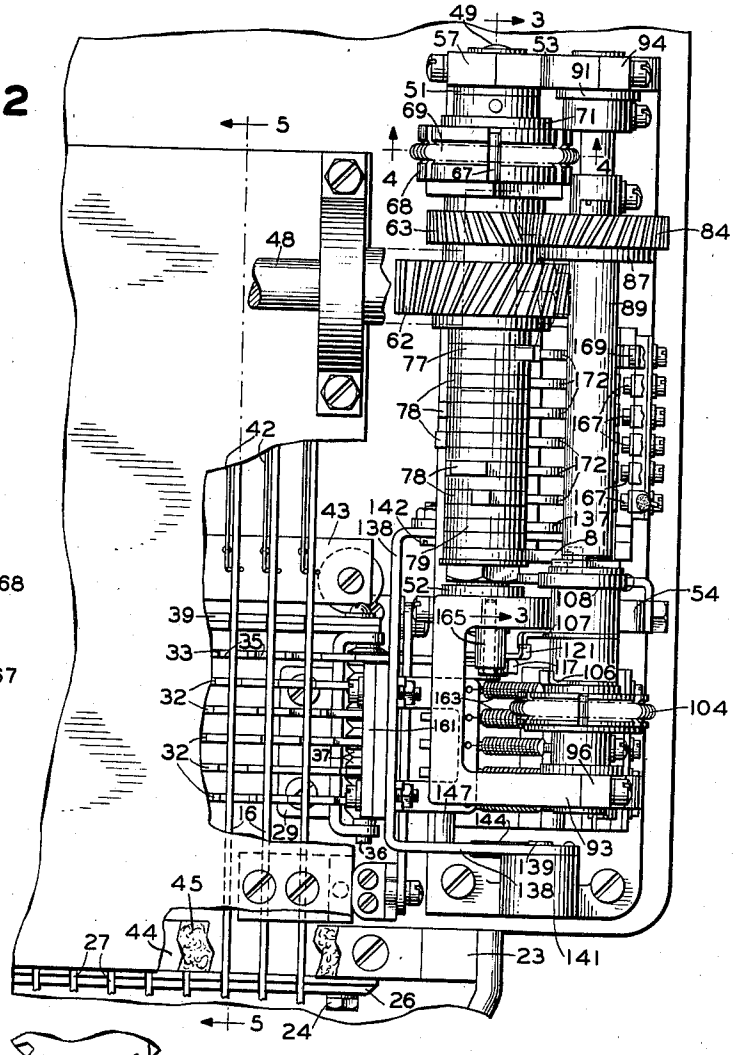


FIG. 4

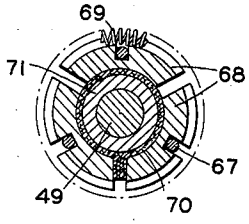


FIG. 3

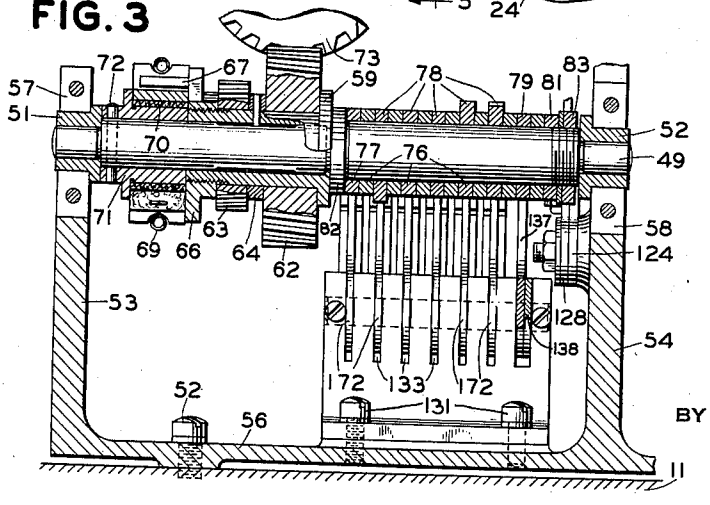


INVENTORS
P. A. NOXON
G. F. MILLER

BY M. P. Marsh
ATTORNEY

Aug. 27, 1940. P. A. NOXON ET AL 2,212,548

TELEGRAPH KEYBOARD MECHANISM

Filed Aug. 14, 1937 3 Sheets-Sheet 3

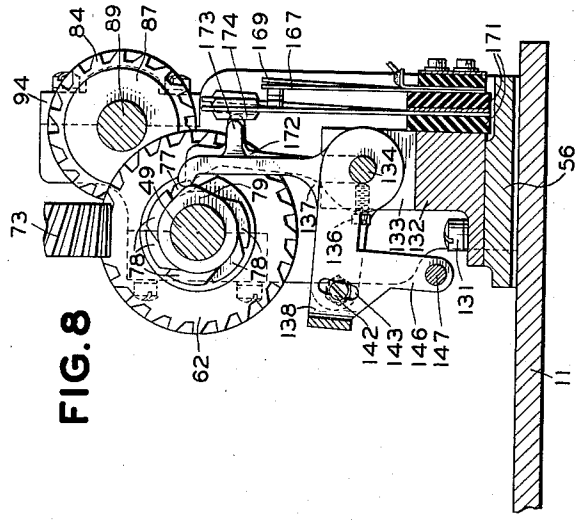

FIG. 8

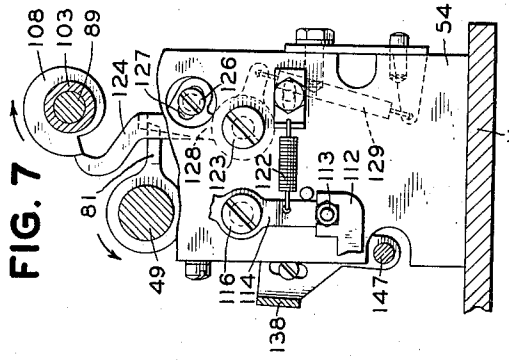

FIG. 7

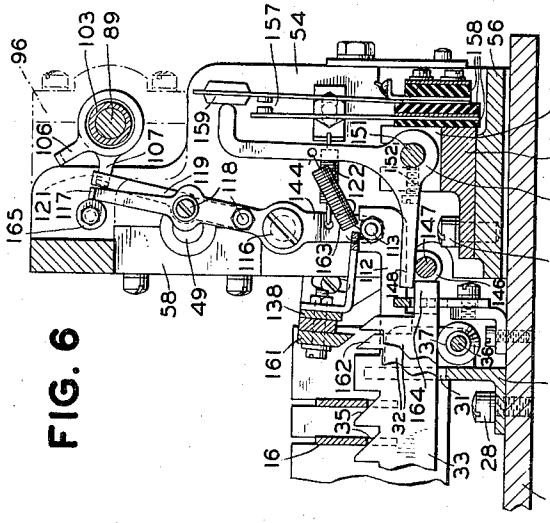

FIG. 6

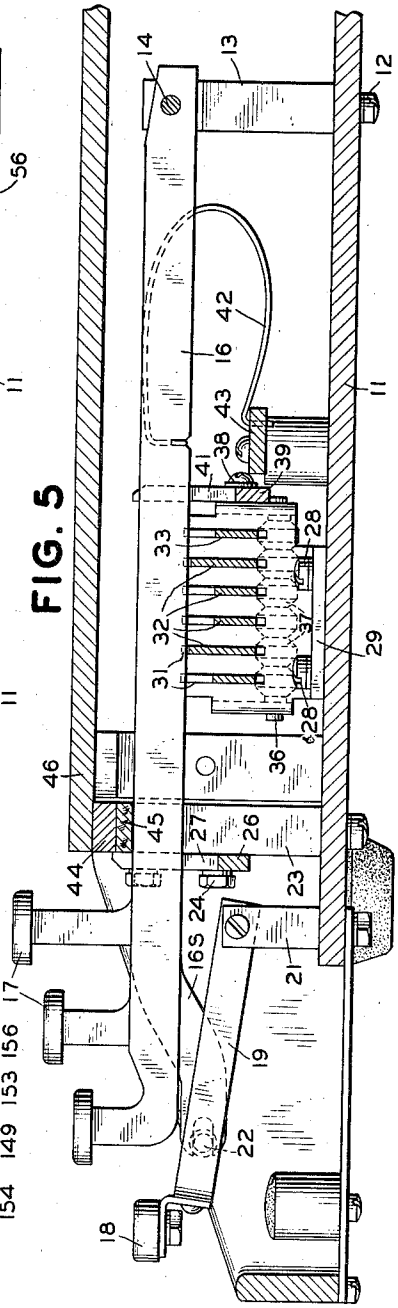

FIG. 5

INVENTORS
P. A. NOXON
G. F. MILLER

BY M. R. Marsh
ATTORNEY

Patented Aug. 27, 1940

2,212,548

# UNITED STATES PATENT OFFICE

2,212,548

## TELEGRAPH KEYBOARD MECHANISM

Paul A. Noxon, Tenafly, and George F. Miller, Union, N. J., assignors to The Western Union Telegraph Company, New York, N. Y., a corporation of New York

Application August 14, 1937, Serial No. 159,124

7 Claims. (Cl. 178—79)

This invention relates primarily to telegraph keyboard mechanisms and more particularly to permutation keyboard mechanisms for selective telegraph systems and the like, in which a plurality of keys and keylevers serve to selectively position a set of permutation members in various combinations according to the keylever operated and concomitantly start or initiate the operation of a distributing or transmitting mechanism for transmitting a group of impulses representative of the position of the permutation members. The keyboard mechanism is especially adapted for operation in conjunction with start-stop telegraph systems wherein a definite code, made up of permutations of a definite number of two different line conditions is employed, and each code group is preceded by a start impulse or interval of uniform line condition and followed by a stopping or rest impulse or interval which is always the same and of opposite line condition from that of the starting impulse.

In order to maintain synchronism between the transmitter and receiver in start-stop telegraph systems, it is the usual practice to employ creep, which in effect is to rotate the receiving distributor shaft an appreciable amount faster than the transmitting distributor shaft. In such systems the receiving apparatus is started into operation by the start impulse and comes to rest during the rest impulse, and remains at rest until the start impulse of the succeeding group of impulses. This insures that the receiving shaft is stopped in its rest position and properly conditioned for the start impulse of the following code group of impulses. Obviously, such an arrangement has many disadvantages, such as necessitating transmitting and receiving shafts rotating at different speeds and a non-uniform arrangement of the corresponding operating positions of the transmitting and receiving shafts. It is, therefore, one of the objects of this invention to provide a keyboard transmitting mechanism wherein the transmitting shaft may rotate at substantially the same speed or even a slight amount faster than the speed of rotation of the receiving shaft and have the respective operating positions on the two shafts equally spaced. This is accomplished in accordance with this invention by definitely stopping the transmitting shaft after each revolution and holding it at rest for at least a predetermined length of time in order to insure that the receiving shaft will have completed a revolution and be stopped in its rest position at the completion of the corresponding revolution of the transmitting shaft under all normal speed variations likely to occur between the two shafts.

In telegraph keyboards there are usually a considerable number of elements that have to be positioned or moved by the operation of a keylever, the number of elements having to be moved may depend to a considerable extent upon the previous keylever actuated. Obviously, such an arrangement requires a substantial pressure to operate the keylevers under certain conditions while in others it is somewhat lighter. Such arrangements, in addition to being very tiring on the operator, are not conducive to high speed operation and it is therefore another object of the invention to provide a keyboard wherein very little pressure is required to operate the keylevers and wherein the pressure is substantially uniform for all conditions.

Other objects of the invention reside in the manner in which the prevention of the operation of more than one keylever at a time is accomplished, the manner in which the operation of a second keylever is prevented until after the complete transmission of the impulses represented by the actuation of the preceding keylever, and the ease of adjustment and accessibility of the parts and the minimum number of parts employed.

Other objects and advantages of the invention will appear hereinafter in conjunction with the detailed description thereof.

The preferred embodiment of the invention, illustrated in the accompanying drawings, employs a set of keylevers arranged substantially the same as those of an ordinary typewriter. Extending at right angles to the keylevers are a set of differently notched permutation bars which are adapted to be selectively positioned in accordance with the keylever operated. A so-called sixth or release bar operated whenever any keylever is depressed causes the release of a frictionally driven timing shaft. The timing shaft controls the release of the transmitting shaft which in rotating from its rest position locks the permutation bars in their selected positions and allows a set of contact controlling bell cranks to operatively engage the permutation bars to selectively position a set of primary contacts in accordance with the positions of the permutation bars. Further rotation of the transmitting shaft then sequentially closes a set of transmitting contacts, electrically connected to the primary contacts, to transmit a group of impulses representative of the settings of the primary contacts. The transmitting shaft rotates

at a slightly higher speed than the timing shaft and therefore completes its revolution and is stopped in its rest position before the timing shaft completes its revolution and can again release the transmitting shaft in conjunction with another group of impulses. The transmitting shaft in conjunction with a start contact also controls the transmission of the start and rest impulses.

A more complete and thorough understanding of the invention may be had when taken in conjunction with the following detailed description and the drawings, in the latter of which:

Fig. 1 is a right hand elevational view of the preferred embodiment of the invention;

Fig. 2 is a partial plan view thereof showing the transmitting mechanism and a part of the keyboard;

Fig. 3 is a sectional view taken on line 3—3 of Fig. 2;

Fig. 4 is a sectional view taken on line 4—4 of Fig. 2;

Fig. 5 is a sectional view taken substantially on line 5—5 of Fig. 2 and in addition shows the front ends of the keylevers.

Fig. 6 is a sectional view taken on line 6—6 of Fig. 1;

Fig. 7 is a sectional view taken on line 7—7 of Fig. 1;

Fig. 8 is a sectional view taken on line 8—8 of Fig. 1;

Fig. 9 is a sectional view taken on line 9—9 of Fig. 1; and

Fig. 10 is a circuit diagram of the contacts and line conductors.

Referring first to Figs. 1 and 5, the preferred embodiment of the invention is provided with a flat metal base plate 11 upon which are mounted the various elements of the keyboard hereinafter described. Attached by screws 12 adjacent the center of the base plate 11 are a row of vertical posts 13. Horizontally supported in the upper ends of the posts 13 is a keylever pivot rod 14. Pivoted at their rear ends on the rod 14 are a series of keylevers 16. The keylevers extend horizontally in the keyboard and the forward upturned ends are provided with associated finger keys or key caps 17. The arrangement of the finger keys is in a bank of three horizontal rows and their arrangement is similar to that of the finger keys of a three-bank typewriter. An elongated space finger key 18 is provided, and is disposed in the front center of the keyboard. The space finger key 18 is attached to a bail 19 which is pivotally supported in blocks, such as 21, attached to the front edge of the base plate 11. The space bail 19 is articulatively associated with the respective space keylever 16S by means of a pin 22 in an arm of the bail 19 engaged in the bifurcated end of the space keylever 16S. Attached adjacent the front corners of the base plates 11 are a pair of vertical spacing posts 23. Attached to the posts 23 by screws, such as 24, is a front comb plate 26, which has therein a series of vertical slots 27, one for each of the keylevers 16, which are adapted to guide the keylevers in their vertical movement. Attached to the base plate 11, at opposite sides thereof, by screws 28, Figs. 5 and 6, are a pair of brackets 29 (one only of which is shown) which have therein a plurality of vertical slots 31. Extending transversely beneath the keylever 16 and guided in the slots 31 in the brackets 29 are a set of five notched permutation members or bars 32, one for each of the variable impulses of the signaling code, and a sixth or release bar 33. Each of the permutation bars 32, as well known in the art, is provided with a series of notches having oppositely inclined faces, one of such faces being provided on each bar for each of the keylevers 16 so that it is moved to one of two positions by the depression of some of the keylevers and into the other of such positions by the depression of the other keylevers. As the permutation bars are not moved by any other means except the keylevers, they retain their setting until the same is changed by the depression of another keylever and the notches on the permutation members cooperate with the keylever to prevent the operation of more than one keylever at a time in a manner well known in the art. The release bar 33 has beveled surfaces 35, Fig. 6, which slope in only one direction and is restored to its right hand position, as shown in Fig. 6, by means hereinafter described as soon as permitted by the release of an operated keylever. A rod 36 in each of the brackets 29 has pivotally mounted thereon a set of six rollers 37, one individual to each of the permutation bars 32 and the release bar 33. The rollers 37 permit movement of the bars from one position to the other with a minimum amount of friction. Secured to the rear of the brackets 29 by screws 38, Figs. 2 and 5, and extending therebetween is a rear comb plate 39 which has therein a plurality of vertical slots 41, one individual to each of the keylevers 16, to guide the keylevers adjacent the center thereof. The keylevers are upheld in a normal position by associated bent single wire springs 42, the fixed ends of which are anchored in a spring bar 43 suitably supported from the base plate 11. The keylevers 16 are limited in their upward movement by a bar 44 faced with a leather strip 45 or some other suitable absorbing material extending between the posts 23 and in their downward movement by the construction and depth of the notches in the permutation bars 32. From the above it is evident that the operation of a keylever causes the permutation bars 33 to be positioned in accordance with the operated keylever and the manner in which a representative group of code impulses is transmitted will hereinafter be described.

Supported on the top of the posts 23 at the front of the keyboard and by suitable members (not shown) at the rear of the base plate 11 is a top plate 46. The keyboard is usually associated and operates in combination with a printing unit and the top plate 46 comprises the base of the printing unit. A common motor is employed for the printing and keyboard unit and the motor is attached to the printing unit. The keyboard may be operated, however, as a separate unit by providing an electric motor as will hereinafter be evident.

At the right hand edge of the keyboard is the transmitting mechanism which is adapted, as hereinafter described, to change the mechanical settings of the permutation bars 32 into representative combinations of electrical impulses and to precede and follow each combination with start and rest impulses, respectively. When used in combination with a printing unit, the transmitting mechanism, as illustrated in the preferred embodiment, is adapted to be driven (as hereinafter described) from the continually rotating operating shaft 48, Figs. 1 and 2, of the associated printer unit.

The transmitting unit comprises a transmit-

ting shaft 49, Fig. 3, which is pivotally supported adjacent either end in flanged bushings 51 and 52. The bushings are clamped to vertical sections 53 and 54 of a cast transmitting frame 56 by bushing clamping member 57 and 58 respectively. Freely mounted on the transmitting shaft 49 is a flanged sleeve 59. Forced on the sleeve 59 and adapted for rotation therewith are two helical gears 62 and 63, separated by a spacer 64. A nut 66 on the threaded left hand end of the sleeve 59 clamps the gears and spacer in place and together for rotation with the sleeve 59. Extending horizontally from the left hand face of the nut 66 are a series of pins 67, Figs. 3 and 4, which engage radial slots in a segmented ring comprising three segments 68. A circular coiled radially contractible spring 69 surrounds the segments 68 and holds them together with a felt ring 70 in frictional engagement with the outer circumference of a collar 71. The collar 71 is fixed adjacent the left hand end of the transmitting shaft 49 for rotation therewith by means of a pin 72. The gear 62 meshes with another helical gear 73 located directly thereabove and is adapted to be rotated thereby. The gear 73 is fixed to the continuously rotating operating shaft 48 of the associated printer unit and is adapted to be rotated thereby. Thus, the gear 62 and the elements fixed to the sleeve 59 are continuously rotated. The pins 67 cause the segments 68 to rotate with the sleeve 59 and they in cooperation with the felt ring 70 tend to rotate the collar 71 fixed to the transmitting shaft 49. However, the transmitting shaft 49 is normally held at rest in its predetermined rest or normal position by means hereinafter described.

Located on the right hand end, as shown in Fig. 3, of the transmitting shaft 49 from left to right intermediate with spacers 76 is a start pulse cam 77, five transmitting cams indicated in general by reference numeral 78, a lock cam 79 and a stop arm 81. The cams 77, 78 and 79 and the stop arm 81 are clamped together and against a flange 82 on the shaft 49 for rotation therewith by means of a nut 83 in threaded engagement with the threaded right hand end of the transmitting shaft 49.

Meshing with the gear 63 and adapted to be rotated therefrom is another gear 84, Figs. 1, 2 and 9, which is fixed by screws 86 for rotation therewith to a gear hub 87. The gear hub 87 is in turn secured by means of a set screw 88 to a timing shaft 89. The timing shaft 89 is parallel to the transmitting shaft 49 and is pivotally supported at its ends in bushings 91 and 92. The bushings 91 and 92 are clamped in position and to the upper parts of sections 53 and 93 of the main transmitter casting 56 by bushing clamping members 94 and 96, respectively. Secured adjacent the left hand end of the timing shaft 89, for rotation therewith, by means of a set screw 97 is a flanged collar 98 and extending horizontally from the right hand side of the flange of the collar 98 are a group of pins 99 which engage radial slots in a segmented ring 101. The segments 101, similar to the segment 68, Fig. 4, are held with a felt ring 102, Fig. 9, in frictional engagement with the outer circumference of a sleeve 103 by means of a spring 104. The sleeve 103 is loosely mounted on the timing shaft 89 and tends to rotate therewith due to the action of the rotating segments 101 and felt 102 frictionally engaged therewith. However, the sleeve is normally held in its normal rest position by means hereinafter described. Adapted to rotate with the sleeve 103 are two stop arms 106 and 107 and a disc cam 108. The stop arms 106 and 107 and the cam 108 intermediate with spacers 109 are clamped together and in position by means of a nut 111 in threaded engagement with the right hand end of the sleeve 103.

When a keylever is depressed to selectively position the permutation bars 32, the lower edge of the keylever also engages the associated beveled surface 35, Fig. 6, on the release bar 33 and moves the release bar to the left. The release bar 33 has a rightwardly extending projection 112 which is upwardly bifurcated to engage a pin 113 on the lower end of a substantially vertical lever 114. The lever 114 is pivoted adjacent its center on a shoulder screw 116 extending horizontally from the vertical section 54 of the transmitting casting 56. The upper end 117 of the lever 114 is bent horizontally toward the front as shown in Fig. 6, and to the left as shown dotted in Fig. 1. Adjustably attached to the lever 114 by screws 118 is another lever 119. The upper end 121 of the lever 119 is bent horizontally toward the right as shown dotted in Fig. 1, and is normally engaged with the bent end of the stop arm 107 fixed to the sleeve 103 on the timing shaft 89 to hold the sleeve 103 at rest in its normal rest position. The bent end 117 of the lever 114 is adapted to operatively engage the stop arm 106 on the sleeve 103 to stop the rotation of the same in an off-normal position, as will be hereinafter described. As the release bar 33 is cammed to the left, it causes the lever 114 to pivot a slight amount in a clockwise direction against the action of the attached spring 122, Fig. 6. As the lever 114 pivots in a clockwise direction, the upper bent end 121 of the lever 119 is disengaged from the bent end of the stop arm 107 fixed to the sleeve 103. Thereupon the sleeve 103 and its attached members are free to rotate with the timing shaft 89 through the action of the friction clutch comprising the felt ring 102 and the segments 101 until brought to rest as hereinafter described. As the sleeve 103 on the timing shaft 89 has very little work to perform, the friction clutch thereon, comprising the segments 101 and felt ring 102, may be made very light as compared with the friction clutch on the transmitting shaft 49. With a light friction clutch on the timing shaft 89, the disengagement of the stop arm 107 and the lever 119 can more easily be made. Therefore, less pressure is required on a keylever to release the timing shaft than if the keylevers caused the release of the transmitting shaft 49 directly. Accordingly, only sufficient pressure on a keylever is required to position the permutation bars 32 and release the light friction clutch on the timing shaft 89 and this comprises one of the novel features of the invention.

Pivoted on a horizontal shoulder screw 123, Fig. 7, in the section 54 of the transmitter frame casting is a bell crank 124. Adjustably attached to the bell crank 124, by means of a screw 126 extending through an elongated slot 127 in the bell crank 124, is a lever 128. The upper end of the lever 128 is bent horizontally toward the right as shown in Fig. 1, and is normally engaged with the end of the stop arm 81 on the transmitting shaft 49. A spring 129 attached to an arm of the bell crank 124 keeps the upper end thereof in engagement with the periphery of the disc cam 108 on the sleeve 103. After the

sleeve 103 has been released to rotate, as hereinbefore described, and has rotated a few degrees from its rest position, the cam 108 allows the spring 129 to rock the bell crank 124 and the attached lever 128 in a clockwise direction, as shown in Fig. 7. This movement of the lever 128 causes the horizontally bent end thereof to be disengaged from the end of the stop arm 81 on the transmitting shaft 49. Thereupon the transmitting shaft 49 is free to rotate with the constantly rotating sleeve 59 thereon, through the action of the hereinbefore described friction clutch comprising the segments 68 and the felt ring 70. The functions performed on the rotation of the transmitting shaft will be hereinafter pointed out.

Attached to the transmitter frame casting 56 by screws 131, Fig. 8, is a block 132 which has therein a plurality of vertical slots 133. Horizontally supported in the block 132 and held therein by screws, such as 136, is a rod 134. Pivotally supported on the rod 134 and in a vertical slot 133 in the block 132 is a bell crank 137 which has the upper end thereof in operative alignment with the lock cam 79 on the transmitter shaft 49. Also pivoted on the rod 134 and in the same slot 133 in the block 132 as the bell crank 137 is one end of a U-shape locking bail 138. The other end of the locking bail 138 is pivotally supported on the end of a shoulder screw 139 in the section 141 of the transmitter casting 56, Figs. 1 and 2. The bell crank 137, Fig. 8, and the locking bail 138 are adjustably attached together by means of a screw 142 extending through an elongated slot 143 in the locking bail 138. A spring 144, Fig. 1, attached to the bail 138 tends to rock the bail and bell crank 137 in a counter-clockwise direction as shown in Fig. 8 and keeps the upper end of the bell crank 137 in engagement with its associated cam 79. Horizontally supported from depending sections, such as 146, Figs. 6 to 8, of the locking bail 138 is a rod 147 which extends beneath the leftwardly extending arms 148 of a series of bell cranks 149. The bell cranks 149, five in number, are each in operative alignment with an associated one of the permutation bars 32 and are pivotally supported on a horizontal rod 151 which is held by screws 152 in a block 153 attached to the transmitter frame 56 by screws 154. Vertical slots 156 in the block 153 guide the bell cranks 149 in their movements hereinafter described. Attached to the right hand side of the block 153 are a series of five spring contacts indicated in general by reference numeral 157. The contacts 157 are mounted between strips of insulating material 158 and each is associated and in alignment with one of the bell cranks 149. A piece of insulating material 159 attached to the top right hand spring of each contact 157 engages the horizontal projection at the upper end of its associated bell crank and is normally held open thereby. Attached to the center section of the locking bail 138 is a wedge-shaped member 161 which is adapted to cooperate with wedge-shaped projections 162 on each of the permutation bars 32 to hold the bars in their selected position during the transmission of the corresponding group of impulses.

When the transmitting shaft 49 is released for rotation as hereinbefore described and has rotated a few degrees from its normal rest position, the high part of the cam 79 rotates out of operative engagement with the upper end of the bell crank 137. This allows the bell crank 137 and the attached bail 138 to rock a few degrees in a counter-clockwise direction as shown in Fig. 8. As the bail 138 rocks the wedge-shaped section 161 moves into the path of the vertical projections 162 on the permutation bars 32 and thereby prevents them from being moved for the time being by the operation of another keylever 16. The rod 147 rocking with bail 138 allows the bell cranks 149 to rock in a counter-clockwise direction under the action of their individually associated springs 163. The amount of rocking of the individual bell cranks 149 is determined by the position of their associated permutation bars 32 by means of projections 164 extending horizontally from the right hand end of each of the bars. When a permutation bar 32 is in its right hand position, as moved by a keylever 16, the projection 164 is beneath the left hand end of the arm 148 of its associated bell crank 149 and with a permutation bar in its left hand position the projection 164 thereon is out from beneath the end of the leftwardly extending arms 148 of its associated bell crank. Thus, as the bail 138 pivots, the bell cranks 149 associated with the permutation bars 32 that are in their left hand position are allowed to pivot to the full amount allowed by the rod 147 whereas the bell cranks whose associated permutation bars 32 are in their right hand position engage the projections 164 after a slight amount of pivoting to stop further movement of the bell cranks. The bell cranks 149 in pivoting to the full amount allowed by the rod 147 allow their associated contacts 157 to close while the bell cranks which pivot only a slight amount hold their associated contacts open. Thus, the settings of the permutation bars 32 are simultaneously transferred to the set of contacts 157 and are represented by the contacts associated with the permutation bars in their right hand position remaining open, and the contacts associated with permutation bars in their left hand position being closed.

The contacts 157 associated with the bell cranks 149 are called the primary contacts and one spring of each of these contacts is connected in parallel to one of the line conductors such as 166, Fig. 10. The other springs of these contacts 157 are each individually connected to one of the springs of associated transmitting contacts 167. The other springs of the transmitting contacts 167 are connected in parallel to the line circuit 168. The transmitting contacts 167 are normally open and a normally closed start contact 169 is connected between the two line conductors 166 and 168. The transmitting contacts 167, Fig. 8, and the start contact 169 are attached between strips of insulating material, such as 171, to the block 132. Associated with each of the transmitting contacts 167 and the start contact 169 are individual contact levers 172. The contact levers 172 are pivotally mounted at their lower ends on the rod 134 in the block 132, and the upper left hand ends thereof, as shown in Fig. 8, are in operative alignment with the associated transmitting cams 78 and the start cam 77. Each of the contact levers 172 has a rightwardly extending arm 173 adjacent the center thereof which engages a piece of insulating material such as 174 at the upper end of one of the springs of their associated contacts 167 and 169. In the rest position of the transmitting shaft 49 the high part of the start cam 77 engages its associated contact lever 172 to hold the associated start contact 169 closed and main-

tain the normal closed line condition. As the transmitting shaft 49 is released for rotation as hereinbefore described and has rotated a slight amount from its rest position, the high part of start cam 77 rotates out of engagement with the upper end of its associated contact lever 172. This allows the start contact 169 to open and as at this time none of the transmitting contacts 167 are closed, an open line condition is transmitted which represents the start impulse. After about one-seventh of a revolution of the transmitting shaft after the opening of the start contact, the first transmitting cam 78 rocks its associated contact lever 172 to close its associated transmitting contact 167, and depending upon the condition of the associated primary contact 157 an open or closed line condition is transmitted to the line circuits 166 and 168. The first transmitting contact is held closed during approximately one-seventh of the revolution of the transmitting shaft 49 and as the high part of the first transmitting cam 78 passes out of engagement with its associated contact lever to allow the first transmitting contact 167 to open, the high part of the second transmitting cam 78 engages its associated contact lever 172 to close its associated contact 167. The third, fourth and fifth transmitting contacts 167 are each sequentially closed for approximately one-seventh of the revolution of the transmitting shaft in a similar manner by their associated cams 78 and contact lever 172 and establish an open or closed line condition depending on the position of their associated primary contacts 157. Near the end of the revolution of the transmitting shaft 49 the high part of the start contact engages its associated contact lever 172 to close the start contact 169. This causes a closed line condition to be transmitted which corresponds to the rest impulse following each code group and is the normal rest condition. Thus a code group of impulses, of open and closed line conditions, representative of the setting of the permutation bars 32 is transmitted to the line and is preceded by an open line start impulse and followed by a closed line rest impulse. Also near the end of the revolution of the transmitting shaft the cam 79 rocks the bellcrank 137 and bail 138 in a clockwise direction to their normal position which withdraws the wedge-shaped member 161 from out of the path of the projections 162 on the permutation bars 32, allowing them to be repositioned by the depression of another keylever and also causes the rod 117 to rock the bell cranks 149 to their normal position.

The manner in which the transmitting shaft is brought to rest at the completion of every revolution for at least a predetermined length of time will now be described. The gears 63 and 84, Fig. 2, are arranged relative to one another so that the timing shaft 89 rotates at a slightly slower speed than the transmitting shaft 49. In the preferred embodiment the gears 63 and 84 are arranged so that the shaft 89 rotates approximately one-thirteenth slower than the transmitting shaft. When the transmitting shaft 49 has made a complete revolution, the sleeve 103 on the timing shaft 89 will have completed only about twelve-thirteenths of a revolution. This amount of rotation is sufficient to allow the cam 108 to pivot the bell crank 124 into its normal position. Therefore, the upper end of the lever 128 will be in the path of the stop arm 81 on the transmitting shaft and as the two engage, the rotation of the transmitting shaft will be stopped. As the sleeve 103 will not at this time have completed a revolution, it will continue to rotate approximately one-thirteenth of a revolution until the stop arm 107 thereon engages the upper end 121 of the lever 119. Thus the transmitting shaft is stopped for at least a predetermined length of time after each revolution before it can again be released by the cam 108 on the timing shaft 89.

In the above description it was assumed that the operated keylever 16 was released immediately or sometime before the transmitting shaft 49 had completed its revolution and a description of the operation will now be given when a keylever is held depressed for an abnormal length of time or longer than the time required for the transmission of a complete code combination. When a keylever is held depressed, the release bar 33 is held in its left hand position, Fig. 6. The release bar 33 in turn holds the levers 114 and 119 rocked in a clockwise direction and in this position of the levers, the upper end 117 of the lever 114 is in the path of the bent end of the stop arm 106 on the sleeve 103. Thus for the above conditions the stop arm 106 and the upper bent end 117 of the lever 114 will engage, and stop the rotation of the sleeve 103 in an off-normal position a few degrees ahead of its normal rest position and will continue to hold the sleeve at rest in an off-normal position as long as the keylever is held operated. When the keylever 16 is finally released, the spring 122 rocks the lever 114 in a counterclockwise direction to its normal position, as limited by an adjustable stop 125, causing the disengagement of the stop arm 106 with the upper end of the lever 114 and places the upper end of the lever 119 in the path of the stop arm 107. Thereupon, the sleeve 103 completes its revolution and the upper end of the lever 119 engages the stop arm 107 to bring the sleeve 103 to rest in its normal rest position. The cam 108 is so shaped that in the off-normal stop position of the sleeve 103, the bell crank 124 and the lever 128 are rocked to their normal position to stop the rotation of the transmitting shaft 49 as heretofore described. Thus, when a keylever is depressed for an abnormal length of time, the transmitting shaft 49 makes one continuous revolution, the same as when the keylever is immediately released, while the timing sleeve 103 is stopped in an off-normal position before it completes its revolution.

It is obvious, of course, that various modifications of the apparatus shown and described herein may be made without departing from the spirit or essential attributes of the invention, such as adapting it for use with a six unit code, and it is desired, therefore, that only such limitations shall be placed thereon as are imposed by the prior art and are specifically set forth in the appended claims.

What is claimed is:

1. In a telegraph apparatus, a set of selectors, a corresponding set of transmitting contacts, a rotary cam member having successively operative sections for effecting the operation of said contacts invariably in succession, means for impressing two different line conditions on said transmitting contacts in accordance with the setting of said selectors, a power driven start-stop member for rotating said cam member, a keyboard and solely mechanical means operated by said power driven member and controlled by said keyboard for setting said selectors.

2. In a telegraph apparatus, a set of primary

contacts, a set of transmitting contacts, a series of keylevers, a set of permutation bars selectively responsive to actuated ones of said keylevers, a source of power, a first means comprising a single cam operated by said source of power for setting said primary contacts in accordance with the setting of said permutation bars and a second means comprising a plurality of cams operated by said source of power for successively actuating said set of transmitting contacts to transmit impulses representative of the setting of said primary contacts.

3. In a start-stop telegraph transmitter, a set of keylevers, a set of permutation bars selectively positioned by the operation of any one of said keylevers at a time, a set of primary contacts and a set of transmitting contacts, a timing shaft and a transmitting shaft, means controlled by the operation of any one of said keylevers to initiate the rotation of said timing shaft, means controlled by said timing shaft for initiating the rotation of said transmitting shaft and invariably stopping the same at the completion of each revolution thereof, a locking bail operable during substantially the complete revolution of said transmitting shaft to lock said permutation bars in their set position, means controlled by said locking bail to actuate said primary contacts in accordance with the setting of said permutation bars and means whereby said transmitting shaft sequentially operates said transmitting contacts to transmit a code combination representative of the setting of said primary contacts.

4. In a keyboard transmitter, a plurality of keylevers, a primary set and an associated set of secondary contacts, a rotatable member, means tending to rotate said member, means for normally maintaining said member at rest, means actuated on the operation of any one of said keylevers for releasing said rotatable member for one revolution and for determining the manner of operation of said primary set of contacts, first means operated by said rotatable member to set said primary set of contacts as determined by said last mentioned means, and a second means operated by said rotatable member to sequentially operate said secondary set of contacts whereby a code combination of impulses representative of setting of said primary set of contacts is transmitted.

5. In a keyboard transmitter, a plurality of keylevers, a primary set of contacts, a rotatable member normally at rest and tending to rotate, means actuated on the operation of any one of said keylevers for releasing said rotatable member for one revolution and for determining the manner of operation of said primary set of contacts and means operated by said rotatable member to set said primary set of contacts as determined by said last mentioned means.

6. In a telegraph keyboard, a set of keylevers, a transmitting member rotatable at a predetermined speed, a timing member rotatable at a predetermined slower speed, means normally tending to rotate said transmitting and timing members, stop means for maintaining said members in predetermined stop positions, means operable on the actuation of any one of said keylevers for releasing said timing member for one revolution and for normally stopping the same in its normal rest position thereafter, means controlled by said timing member during each revolution thereof for releasing said transmitting member for one revolution and for invariably stopping the same thereafter at the normal stop position thereof, means operable on the actuation of a keylever for an abnormal length of time for stopping said timing member in an offnormal stop position ahead of said normal position and means operable on the release of an abnormally operated keylever for allowing said timing member to rotate from said off-normal stop position to said normal stop position.

7. In a telegraph transmitter comprising a series of keylevers, a plurality of permutation members movable from one of two positions to the other in various combinations in accordance with the depression of said keylevers, a release bar invariably operated on the depression of said keylevers, a distributing member rotatable at a predetermined speed, a timing member rotatable at a predetermined slower speed, means normally tending to rotate said distributing and timing members, stop means for maintaining said members in predetermined stop positions, means controlled by said release bar for releasing said timing member and normally bringing it to rest after one complete revolution, means controlled by said timing member for releasing said distributing member to transmit a code combination representative of the position of said permutation members and invariably stopping the same after each revolution thereof, means operative on the depression of a keylever for a longer interval of time than required for said distributing member to make a complete revolution for stopping said timing member in an off-normal position and means operative on the release of said keylever for invariably stopping said timing member in a normal position.

PAUL A. NOXON.
GEORGE F. MILLER.