May 10, 1938. E. A. LARSSON 2,117,030

TROLLEY POLE TENDER

Filed April 16, 1937 3 Sheets-Sheet 1

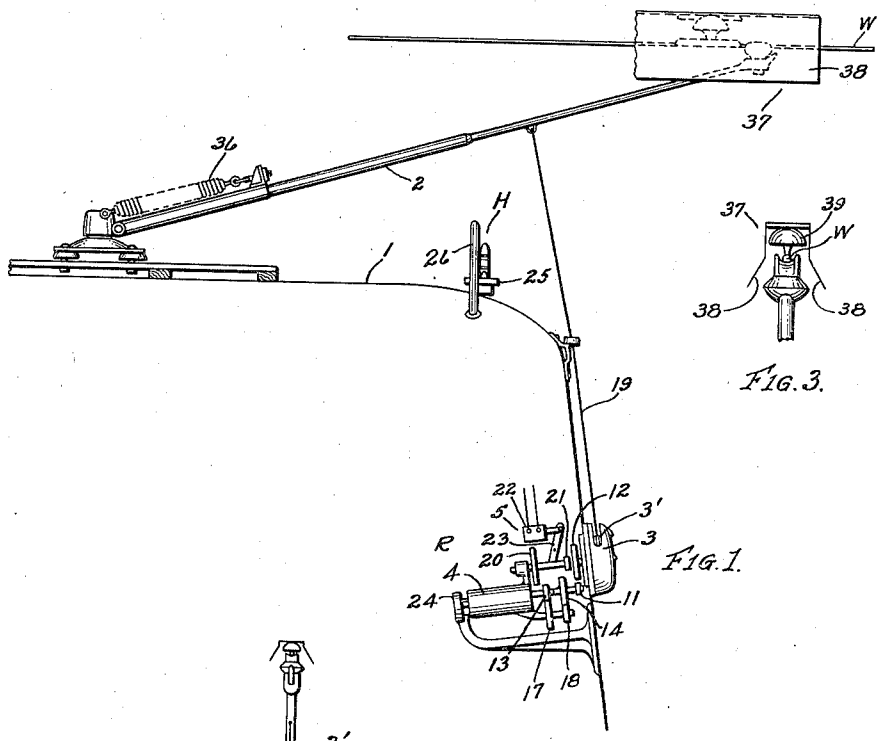

FIG. 1.

FIG. 3.

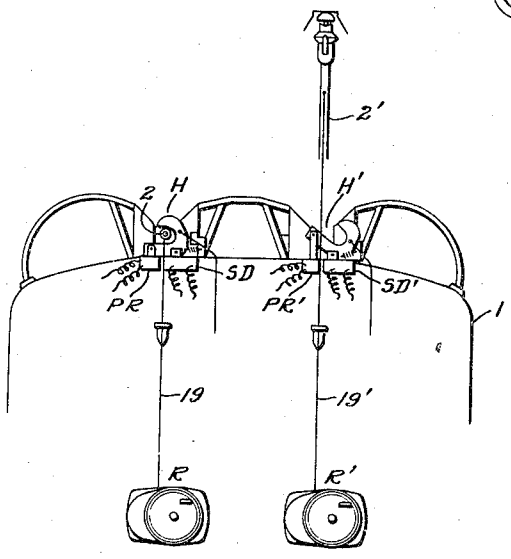

FIG. 2.

Inventor

ERNST A. LARSSON

By

Attorney

May 10, 1938. E. A. LARSSON 2,117,030

TROLLEY POLE TENDER

Filed April 16, 1937 3 Sheets-Sheet 2

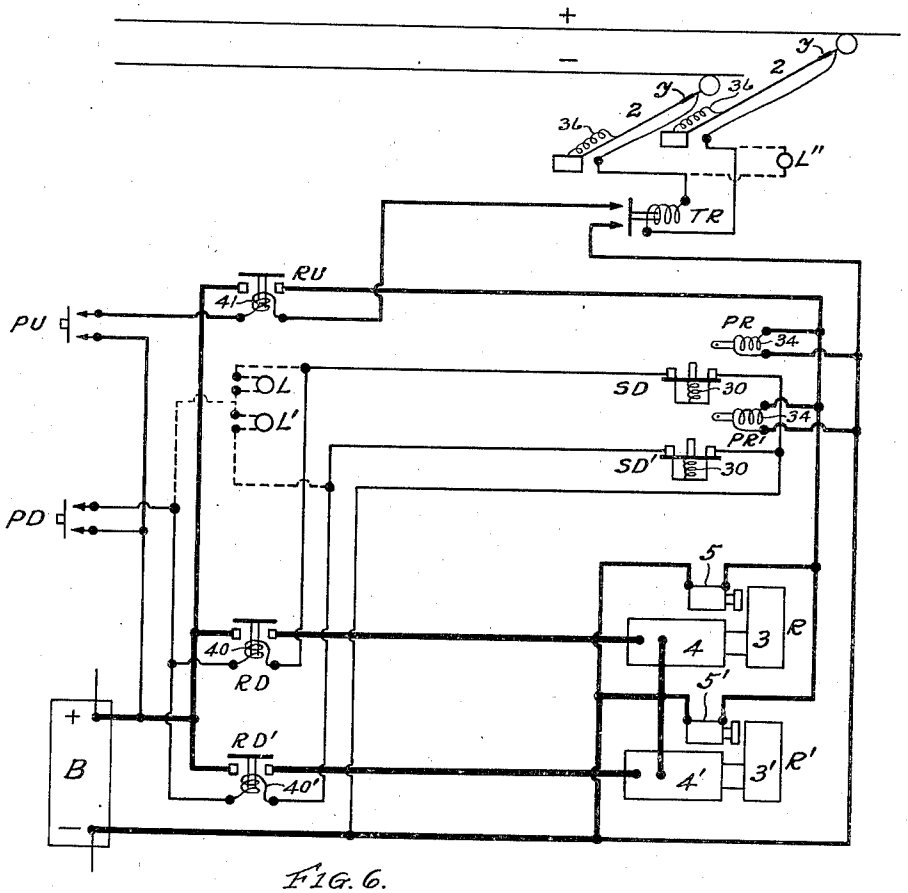

FIG. 6.

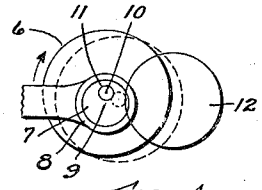

FIG. 4.

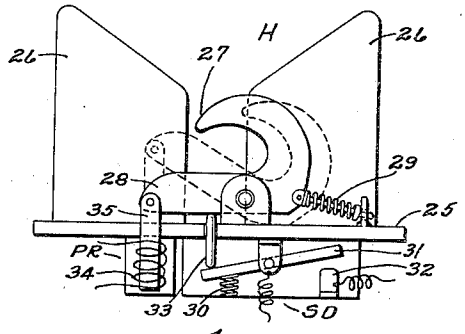

FIG. 5.

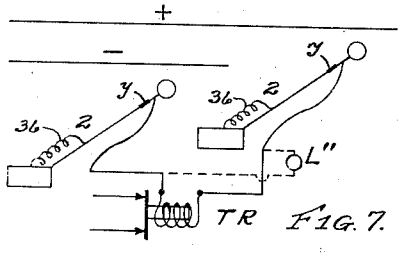

FIG. 7.

Inventor

ERNST A. LARSSON

By

Attorney

May 10, 1938. E. A. LARSSON 2,117,030

TROLLEY POLE TENDER

Filed April 16, 1937 3 Sheets-Sheet 3

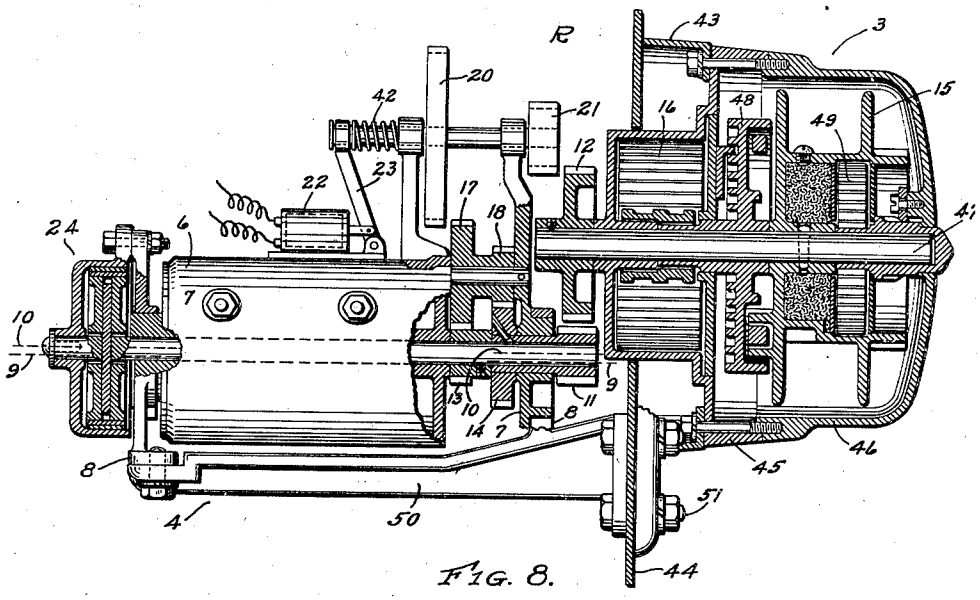

FIG. 8.

Inventor

ERNST A. LARSSON

By

Attorney

Patented May 10, 1938 2,117,030

UNITED STATES PATENT OFFICE

2,117,030

TROLLEY POLE TENDER

Ernst A. Larsson, Mansfield, Ohio, assignor to The Ohio Brass Company, Mansfield, Ohio, a corporation of New Jersey

Application April 16, 1937, Serial No. 137,227

26 Claims. (Cl. 191—85)

My invention relates to mechanisms and systems for use on electrically operated vehicles, and has particular use in controlling the trolley pole or poles used thereon.

One object of my invention is to provide a retriever or trolley pole tender which is operated either by a spring or by an electric motor independently of each other to lower the trolley pole or poles either automatically or at will of the vehicle operator.

Another object of my invention is to provide means to control the raising of the trolley pole after being lowered.

Another object is to provide a device for holding a pole in its lowered position.

Another object is to provide means to effect the release of the pole from the hold-down device.

Another object of my invention is to provide means to effect operation of the retriever at will of the vehicle operator.

A further object of my invention is to provide a system comprising mechanisms, circuits, switches, and a source of current supply, so constructed and related to each other that the system operates at will of an operator to lower the pole or poles on a vehicle and hold them in the lowered position, to release the poles and control the raising of the pole or poles after release, to render the raising and lowering mechanism inoperative after functioning; the system operating to lower each pole independently of the other when more than one pole is used on the vehicle or to raise the poles independently of each other.

Other objects and benefits will appear from the following description:

My invention resides in the new and novel construction, combination, and relation of the various parts, mechanisms, and circuits herein described and shown in the accompanying drawings.

In the drawings:—

Fig. 1 is a partial view of one end of a car having mounted thereon a trolley pole in contact with the trolley wire, a hold-down device to catch and hold the trolley pole when lowered, and my improved device for lowering and controlling the raising of the pole.

Fig. 2 is an end view of the car and apparatus shown in Fig. 1.

Fig. 3 is an end view of a guide for resetting the current collector on the trolley wire after being released from the hold-down device.

Fig. 4 is a schematic view to show in a simple manner how the motor on my retrieving mechanism moves into and out of operative engagement with the reeling portion of my retriever.

Fig. 5 is a face view of my improved hold-down device.

Fig. 6 is a schematic arrangement showing my improved system comprising the various mechanisms, switches, circuits, etc., which I make use of. The various switches are shown in their normal position that is when the current collectors are both in contact with the trolley wires; note that the solenoid switch TR is open.

Fig. 7 is a partial view of the system shown in Fig. 6 and shows the solenoid switch TR as closed, which is its condition when one or both of the current collectors are out of contact with the trolley wires.

Fig. 8 is a view in partial section of the pole tender.

It is not new to employ trolley retriever or tender to maintain taut the rope used in lowering the trolley pole on electrically operated vehicles or to automatically lower the trolley pole when the same inadvertently jumps the trolley wire.

However, with the present-day trolley buses, two poles are used of greater length than in the past and much stiffer spring tension at the base and this requires a much stronger spring in the tender hence the lowering and especially the resetting of the trolley poles manually by the operator becomes a much more difficult task. I have, therefore, devised an apparatus and systems for effecting and controlling the raising and lowering of the trolley poles at will of the operator of the vehicle by his merely operating electric switches.

Mounted upon the vehicle 1 are two trolley poles 2, each having a tender R to control the raising and lowering of its pole. Each tender R has a retrieving portion 3 containing a spring motor, and an electric motor 4 as described in my co-pending case Serial 36,699, filed August 17, 1935. In my present tender R, I employ a shift gear 5 for automatically placing the reeling mechanism of the retrieving portion 3 and the motor 4 in co-operative relation at will of an operator whereby the trolley pole when released from a lowered position will rise at a controlled rate of speed.

The retrieving portion 3 is provided with reeling mechanism including a drum or reel and a retrieving spring and mechanism as shown in my previously cited co-pending case and similar to that shown in Larsson 1,923,314. I have later herein described in more detail, my retriever or tender R.

The motor 4 is provided with the usual field and armature and its shaft, the field being arranged to pivot upon a longitudinal axis, which is eccentric or offset with respect to the axis of the armature. Such relation of parts is shown in Fig. 4, and when a motor so mounted is energized there will be developed therein a starting torque which tends to rotate the field and armature in opposite directions, as disclosed in Chandler et al. 1,960,967; thus, the armature axis tends to rotate or pivot about the axis of the field, and this movement of the armature can be utilized in throwing the armature pinion into and out of mesh with a co-operating gear.

Referring to Fig. 4 the motor field 6 is provided with what may be termed a "trunnion" 7 which is free to rotate or pivot in the bearing 8 upon the longitudinal axis 9. The armature axis 10 is offset laterally from the axis 9 but parallel therewith, and the armature shaft and pinion 11 are free to rotate upon their axis 10 independently of the rotation of the field 6 upon its axis 9.

When the field and armature are energized in the proper direction, the field will pivot upon the axis 9 as indicated by the "arrow" in Fig. 4 and this will move the axis 10 and the rotating pinion 11 to the right and into engagement with the co-operating gear 12, thus rotating the gear 12; the position of the field 6 and armature pinion 11 after being properly energized is shown by the dotted lines in Fig. 4.

Referring now to Fig. 1 in which the motor 4 is mounted as before described, the armature is provided with a pinion 13 which is fixed to the armature shaft to rotate therewith.

Mounted upon the armature shaft and free to rotate thereon is gear 14 which is pinned integrally with pinion 11. The pinion 11 is arranged to mesh with the gear 12 which is operatively connected to the drum 15 of the reeling mechanism. The pinion 11 is normally out of mesh with the gear 12, but when the motor 4 is energized the pinion 11 will be automatically thrown into mesh with the gear 12.

In order to rotate the gear 12 at a reduced speed from that of the armature, I introduce the integral gears 17 and 18 which are normally in mesh with the gears 13 and 14 respectively. The diameters of the co-operating gears and pinions are such that the speed of the gear 12 is very much reduced from that of the armature pinion 13 and, therefore, the trolley pole 2 through the medium of the rope 19 will be lowered at a moderate speed.

My trolley tender is equipped with means whereby the trolley pole which has been lowered may be allowed to rise at a controlled speed. To accomplish this result, my retriever R is equipped as shown in Fig. 1 with integral gearing 20 and 21 arranged to mesh with gearing 13 and 12 respectively, but normally out of mesh therewith. This meshing may be effected by means of the solenoid 22 acting upon a pivotal lever arm 23 which in turn acts upon the gearing 20—21 to move the same longitudinally with its shaft and into meshing relation with the gears 13 and 12. In Fig. 8, I show a modification in which the gearing 20 and 21 meshes with gearing 17 and 12.

It will be evident that since normally the motor 4 is disconnected operatively from the reeling mechanism that by connecting the reeling mechanism and the motor 4, through the medium of electrically shifted gearing 20—21, that rotation of the drum 15 of the reeling mechanism in an unwinding direction will be transmitted to the armature of the motor 4 when the solenoid 22 has been energized and the trolley pole is free to rise under urge of its base spring. The speed of the driven motor armature will be quite high and, therefore, will to a considerable extent resist a rapid rising of the pole 2, but in order to further check the rate of rising of the pole, the motor is equipped with a brake 24 which may be of the internal expanded type such as used on automobiles, or other suitable type.

The brake 24 also tends to increase the starting torque between the armature and field thus making more positive the movement of the pinion 11 into mesh with the gear 12.

The electrically operated shift-gear 5 may be so arranged that instead of the shift being made in a longitudinal direction it may be made in a transverse direction, accomplishing the same results as above described.

Mounted upon the car roof are the hold-down devices H and H' shown in Fig. 5. The hold-down device comprises a base 25 with upright spaced guides 26 forming a slot 27.

Pivotally mounted upon the base 25 is a U-shaped latch 28 provided with an over-center spring 29 which holds the latch 28 in either of two positions; namely, the holding position as shown by full lines in Fig. 5 or the release position shown in dotted lines in Fig. 5. Normally the latch is in the release position as when the trolley pole is in its raised position.

When the trolley pole is lowered, it is guided into the slot 27 and engages with one of the legs of the latch 28 and forces the same downward until the spring 29 has passed over the center, thus is the latch engaged with the trolley pole and will releasably hold it in its lowered position. Associated with the holding device H is a switch SD which is normally held in its closed position by means of the spring 30 when the latch 28 is in its released position; at that time the switch blade 31 engages the contact 32. The blade 31 is actuated to its open position by means of the insulated rod 33. Conductors may lead from the switch blade 31 and from the contact 32.

Associated with each hold-down device is a plunger type solenoid PR comprising a coil 34 and the plunger 35 which is pivotally attached to the latch. The plunger is arranged to be drawn upwardly when coil 34 is energized, thus moving the latch from the full line holding position, shown in Fig. 5, to the dotted line releasing position.

Thus, it will be apparent that if the coil 34 is energized from some station within the vehicle and the latch is in the holding position with respect to the trolley pole that the latch will be moved to its releasing position and the trolley pole will be free to move upwardly under action of the trolley base spring 36.

If at the same time the hold-down device releases the pole, the electrically operated gear shift 5 is energized, the reeling mechanism will be operatively connected to the motor 4, thus the rate of rise of the pole 2 will be checked or controlled.

Such release and control of the pole may best be made at fixed stations along the line of travel of the vehicle; as for instance, at points where it is desirable to switch from gas operation to electric operation. At such points the trolley wire is equipped with a guide trough 37 shown in Figs. 1 and 3. This trough may be made of structural iron having sloping and converging sides 38 and held in position with respect to the

trolley wire by means of an insulated hanger 39 or otherwise. By properly proportioning and relating the parts, the trough may be made to guide the collector onto the wire.

Thus, when the trolley pole 2 is released from the holding device H and the end of the pole nears the trolley wire W, it will be guided onto the trolley wire W through the converging sides 38.

In order to control the lowering and raising of the trolley pole, I have devised a system of conductors, switches and source of power, so constructed and related with respect to each other and to the hold-down device and trolley tender that the results heretofore described may be effected by the vehicle operator from his station within the car or from some other convenient point on the vehicle. Such a system is shown in Fig. 6.

B represents a source of power, preferably a battery, which may be of 12 volts as a matter of convenience and is independent of the trolley current except as to charging. PD represents a manually operated push-button switch, which the operator closes when he wishes to have the poles lowered and which he maintains closed until the poles have been lowered and properly seated in the hold-down device H and H'. The closing of the switch PD energizes the coils 40 and 40' of the switches RD and RD', thus closing these switches which are normally open and connecting the motors 4 and 4' in parallel and directly to the battery B. This energizes the motors and causes their pinions 11 to be moved into mesh with the gears 12 on the reeling mechanism and effects a lowering of the trolley poles through the medium of the ropes 19.

When the trolley poles have been brought to the desired lowered position and locked down by the latches 28, the switches SD and SD' will be automatically opened, thus de-energizing the circuits controlling the energization of the coils 40 and 40', and permitting the switches RD and RD' to open thus de-energizing the motors and preventing operation of the motors while the poles are fully depressed.

It will be apparent, since the switches RD and RD' and their respectively controlled motors 4 and 4' are connected in parallel to the battery B, that the operation of the motors will be independent of each other where two poles and sets of apparatus are employed. Thus, if one trolley pole is brought to its lowest position ahead of the other its motor will be automatically cut-off while the other motor is still operating to complete the lowering of its trolley pole and will be automatically cut-off when the pole has reached its lowest position.

In order that the operator may know when the poles have both been brought to their lowest position, lights L and L' are connected to the circuits controlled by the switches SD and SD' so that when the switch PD is closed by the operator, the lights L and L' will glow, but as soon as either or both switches SD and SD' are opened then the lights L and L' respectively, or both will be dark, indicating the trolley poles are lowered and locked down.

In Fig. 6 it will be noted that the current collectors are both engaging the trolley wires as when in normal traveling condition; therefore, the switch TR is energized and open and the circuit controlled thereby open.

It will be noted in Fig. 7 that the current collectors are out of engagement with the trolley poles, which is the situation when the poles are in their lowered position and, therefore, the switch TR is de-energized and closed, thus closing the circuit controlled by this switch.

Referring again to Fig. 6, and considering that the trolley poles have been lowered and locked in position and, therefore, the switch TR is de-energized and closed as in Fig. 7, if now the operator desires the poles raised, he will close the push-button switch PU, thus energizing the coil 41 which closes the switch RU. This energizes the coils 34 of the solenoids PR, which in turn operate the latches 28 on the hold-down devices to the releasing position permitting the poles to rise under action of the trolley base spring 36.

Simultaneously with the closing of the switch RU and the energizing of the solenoids PR the electrically operated shift gears 5 and 5' will be energized and the reeling mechanisms of the tenders will be operatively connected to the motors 4 and 4' respectively, thus the trolley poles will rise, but the rate of rise will be controlled as previously described.

As soon as the two current collectors engage their respective trolley wires, the coil of the switch TR will be energized and the switch opened, thus de-energizing the coil 41 and opening the switch RU, which in turn opens the circuit controlling the releasing of the trolley poles and de-energizing the solenoids 22. The inter-meshing of the motor pinions 11 and reeling mechanisms of the trolley tenders through the medium of the shift gears 5 and 5' will be broken and the spring 42 will return the gears 5 and 5' to their normal position.

In order to apprise the operator as to the engagement of both current collectors with the trolley wires after the raising operation, a light L'' may be located at any convenient point in the vehicle and connected to the two conductors leading from the trolley poles. As soon as both trolley poles have reached their upper position with the current collectors in contact with the trolley wires, the light L'' will glow, at other times it will be dark.

If during the raising and lowering operation, the operator should allow the switches PD or PU to open before the function of raising or lowering the trolley poles has been completed, the trolley pole in each instance would then start to rise rapidly and in that case the retrieving spring 16 of the reeling mechanism of the trolley tender would come into operation and automatically check the upper rise of the trolley pole or poles and draw the same down. In this case, it would be necessary for the operator to reset the retrievers by manually withdrawing the rope from the tender, all of which is familiar to those skilled in the art.

The current collector is insulated from the pole proper by an insulator Y.

While I am not claiming the detail construction of the retrieving portion 3 of my trolley tender R, I am giving additional description of the same.

The device comprises a base 43 which may be mounted upon the car dash 44. The device is also provided with casing parts 45 and 46, the part 46 is cup shape with the outer face convex. The case encloses the usual reel or drum operating mechanism consisting of a shaft 47 upon which rotates control mechanism 48 by means of which the retrieving spring 16 is operatively and automatically connected to the winding drum 15 when and if the current collector at the end of the

trolley pole should suddenly leave the wire and move upwardly. Under such conditions the drum or reel 15 is rotated by spring 16 and the trolley rope 19 will be automatically wound upon the drum and the trolley pole drawn to a position where the current collector is below the trolley wire.

The reel 15 is free to rotate under normal conditions with the shaft 47 in either direction as the trolley pole rises or falls due to variation in the height of the trolley wire with respect to the vehicle. These movements of the reel control the slack in the rope 19 and as the trolley pole rises the reel is rotated in one direction by the pull of the rope upwardly and the rope unwound from the reel. At the same time the spring 49 is further tensioned and when the pole lowers the spring 49 will rewind the rope upon the reel 15. The ends of the spring 49 are connected to the shaft bearing which is normally stationary and to the reel 15 which is normally free to rotate with the shaft 44.

In order that the operator of the vehicle may lower the pole or poles at will and in a convenient and orderly manner, I equip the trolley tender R with the motor 4 which is secured to the car dash or to the retriever base 43 by means of the bracket 50 and bolts 51. The motor field 6 is provided at each end with the supports 7 which are provided with bearings 8.

If the bracket 50 is secured directly to the base 43, the opening through the dash 44 will be enlarged and there will be no part of the dash interposed between the bracket 50 and base 43.

The friction brake 24 is shown as of the centrifugal type, that is the greater the speed of the motor the greater the braking effort.

While I have shown and described certain practical specific embodiments of my invention and ways and means of carrying it out, it is to be understood that many of the features described may be varied and yet not depart from the scope of my claims, which are as follows:

Having described my invention, I claim:—

1. An electrically operated vehicle having in combination therewith a pivotally mounted trolley pole and current collector biased to a raised position and a pole tender having a rope-winding drum connected to the pole by flexible means to lower the pole, means to hold the pole in its lowered position, an electric motor adapted to be operatively connected to the drum at will of an operator to rotate the drum in a rope-winding direction when the motor is energized and to be rotated by the drum when the trolley pole rises to control the rate of rise of the pole, a source of power on the vehicle, a switch operable by the vehicle operator from a station on the vehicle and remote from the tender, conductors connecting the motor and the switch and the source of power to supply current to the motor to operate the same when the switch is closed by the operator, means to automatically prevent the flow of current to the motor after the pole has lowered a predetermined amount and means operated from a station remote from the said holding means to release the pole at will of the operator.

2. An electrically operated vehicle having in combination therewith a pivotally mounted trolley pole and current collector biased to a raised position and a pole tender having a rope-winding drum connected to the pole by flexible means to lower the pole, means to hold the pole in its lowered position, an electric motor to be operatively connected to the drum at will of an operator to rotate the drum in a rope-winding direction, a source of power on the vehicle, a switch operable by the vehicle operator from a station on the vehicle and remote from the tender, conductors connecting the motor and the switch and the source of power to supply current to the motor to operate and connect the same to the drum when the switch is closed by the operator, means to automatically prevent the flow of current to the motor after the pole has lowered a predetermined amount, means operated from a station remote from the said holding means to release the pole at will of the operator and means associated with the tender to operatively connect the tender drum to the motor to rotate the motor and retard the rate the pole raises after its release.

3. An electrically operated vehicle having in combination therewith a pivotally mounted trolley pole and current collector biased to a raised position and a pole tender having a rope-winding drum connected to the pole by flexible means to lower the pole, means to hold the pole in its lowered position, an electric motor having driving means normally out of operative relation with the drum, the motor being rotatable to move the driving means into operative relation with the drum to rotate the drum in a rope-winding direction when the motor is energized, a source of power on the vehicle, a switch operable by the vehicle operator from a station on the vehicle and remote from the tender, conductors connecting the motor and the switch and the source of power to supply current to the motor to rotate the motor into said operative relation with the drum to rotate the drum when the switch is closed by the operator, means to automatically prevent the flow of current to the motor after the pole has lowered a predetermined amount and means operated from a station remote from the said holding means to release the pole at will of the operator and means associated with the tender to cooperate with means associated with the motor to operatively connect the drum to the motor to rotate the motor and retard the rate the pole raises after its release.

4. A trolley pole tender comprising in combination a retrieving portion having a rope-winding drum and an electric motor to control the rotation of the drum in two directions, mechanism including a gear associated with the drum for rotating the drum, the motor provided with a pivotally mounted field and an armature and its shaft, the field and armature having spaced and parallel axes of rotation and rotatable independent of each other, a driving pinion and a driven pinion associated with the armature shaft and normally out of mesh with the said gear and arranged to be moved into mesh with the gear and rotate the same in one direction when the motor is energized, means under control of an operator to energize the motor, means under control of the operator to operatively connect the said gear to the driven pinion on the armature to rotate the armature when the drum rotates in the other direction.

5. A trolley pole tender comprising a retrieving portion having a rope-winding drum rotatable in two directions and an electric motor to rotate the drum in a rope-winding direction, the motor provided with a field and an armature, mechanism forming a part of the retrieving portion and including a gear interposed between the motor and drum to transmit rotation of the motor armature to the drum at a reduced speed, the motor being normally out of operative relation

with the interposed gear, means to be interposed between the gear and motor armature to rotate the armature when the drum rotates in a rope-unwinding direction to resist rotation of the drum, the last said means being normally out of operative relation with the motor armature, means to move the motor into operative relation with the said interposed gear, means to move the said interposed means into operative relation with the motor armature and the interposed gear and auxiliary means associated with the armature to further resist rotation of the drum.

6. A trolley pole tender comprising a retriever portion having a rope-winding drum normally free to rotate in two directions, a spring, means to connect the spring to the drum in case of emergency to rotate the drum in a rope-winding direction, a motor provided with a field and an armature to be operatively connected to the drum to rotate the drum in a rope-winding direction when the motor is energized and means under control of an operator to operatively connect the drum to the motor to rotate the motor armature and limit the rate of rotation of the drum in a rope-unwinding direction.

7. A trolley pole tender comprising a retriever portion having a rope-winding drum normally free to rotate in two directions, a spring, means to connect the spring to the drum in case of emergency to rotate the drum in a rope-winding direction, a motor provided with a field and an armature normally out of operative relation with the drum to rotate the drum in a rope-winding direction when the spring is not in operative relation with the drum and means to operatively connect the drum to the motor at will of an operator to rotate the motor armature and limit the rate of rotation of the drum in a rope-unwinding direction and means associated with the motor to further resist the rotation of the drum.

8. A trolley pole tender comprising a retriever portion having a rope-winding drum normally rotatable in two directions, a spring to rotate the drum in a rope-winding direction, means to operatively connect the spring to the drum in case of emergency to rotate the drum in a rope-winding direction, and means under control of the operator to be operatively connected to the drum to control the rotation of the drum in a rope-unwinding direction.

9. A trolley pole tender comprising a retriever portion having a winding drum normally rotatable in two directions to control a connection to the trolley pole, a motor having a field and an armature, means under control of an operator to be interposed between the armature and drum to effect rotation of the drum in a winding direction, means to be interposed between the motor and drum and under control of the operator to effect rotation of the armature to control the speed of rotation of the drum when the drum rotates in an unwinding direction.

10. In combination, a vehicle, a trolley pole mounted thereon, a pole tender mounted on the vehicle and having a winding drum rotatable in two directions, means connecting the drum and pole, a motor provided with a field and an armature to be operatively connected to the drum when the motor is energized to rotate the drum in a winding direction to lower the pole, means to hold the pole in its lowered position, means to operatively connect the drum to the motor armature whereby the armature may be rotated by the drum, means under control of the operator to release the pole and simultaneously make the said connection of the drum to the armature to rotate the armature and check the rate of rotation of the drum in an unwinding direction.

11. In combination a vehicle, a trolley pole and a pole tender mounted thereon, the pole tender having a winding drum rotatable in two directions, flexible means connecting the drum and pole, means to rotate the drum in a winding direction to lower the pole, means to receive and hold the pole in its lowered position, means under control of the vehicle operator to release the pole to permit it to rise and rotate the drum in an unwinding direction and means normally out of operative relation with the drum to retard the rate of rotation of the drum in its unwinding direction when the said means and drum are operatively connected and means to move the last said means into operative relation with the drum.

12. In combination a vehicle, a trolley pole and current collector therefor and a pole tender mounted on the vehicle, the pole tender having a rope-winding drum rotatable in two directions, a rope connecting the drum and pole to lower the pole when the drum rotates in one direction, means to receive and hold the pole in its lowered position, means under control of an operator to release the pole to permit it to rise and rotate the drum in a rope-unwinding direction, means associated with the tender to rotate the drum in a rope-winding direction when an unintentional dewirement of the current collector takes place, means to retard the speed of the drum when rotating in a rope-unwinding direction and means to couple the last means to the drum simultaneously with the release of the trolley pole.

13. In combination a vehicle, a trolley pole and a pole tender mounted on the vehicle, the pole tender having a rope-winding drum rotatable in two directions, a rope connecting the drum and pole to lower the pole when the drum rotates in one direction, means to receive and hold the pole in its lowered position, means to release the pole to permit it to rise and rotate the drum in a rope-unwinding direction, means associated with the tender and adapted to be operatively connected to the drum to rotate the drum in a rope-winding direction to lower the pole and to be rotated by the drum to retard the speed of the drum when the pole release means operates to release the pole to permit the rope to rotate the drum in the rope-unwinding direction and means to couple the said means associated with the tender to effect the said rotations.

14. In combination, a vehicle, a pivotally mounted trolley pole provided with a current collector to engage a trolley wire and mounted on the vehicle, a trolley pole tender mounted on the vehicle and provided with a spring to raise the pole about its pivot, the pole tender provided with a drum rotatable in two directions, a rope connecting the drum and the pole to lower the pole against its spring tension when the drum rotates in one direction, electrically operated means to rotate the drum in a winding direction to lower the pole when said means is energized and to be rotated by the drum when the drum rotates in an unwinding direction, means under control of the vehicle operator to energize the said electrically operated means and to operatively connect the drum and the electrically operated means to effect rotation of the drum to lower the pole, hold-down means to receive and hold the pole in its lowered position and having means to render the electrically operated means inoperative when the pole is sufficiently lowered, the hold-down means

also provided with electrically operated means to effect when energized a release of the pole, means under control of the vehicle operator to effect the energization of the last said electrically operated means and simultaneously effect different operative relation between the drum and the first said electrically operated means without energizing the electrically operated means, to retard the rotation of the drum.

15. The combination with a trolley pole retriever having a reel mechanism normally rotatable in two directions and a spring to automatically interlock with the reel mechanism and to rotate the reel in a winding direction should the speed of rotation of the reel in an unwinding direction exceed a predetermined rate, means to be placed in operative relation with the reel and adapted to limit the speed of rotation of the reel in an unwinding direction when the reel is intentionally rotated in an unwinding direction, to prevent the automatic interlock of the spring with the reel mechanism and electrically operated means to operatively connect the speed control means and the reel at will of an operator.

16. The combination with a trolley pole retriever having a reel mechanism normally rotatable in two directions and a spring to automatically interlock with the reel mechanism and to rotate the reel in a winding direction should the speed of rotation of the reel in an unwinding direction exceed a predetermined rate, electrically controlled means so constructed and positioned with respect to the retriever as to be placed in operative relation with the reel to limit the speed of rotation of the reel in an unwinding direction when the reel is intentionally rotated in an unwinding direction, to prevent the automatic interlock of the spring with the reel mechanism and means remote from the retriever and under manual control to energize the electrically controlled means to bring it into operative relation with the reel mechanism to control the speed thereof.

17. The combination with a trolley pole retriever having a drum and pull-down spring to automatically rotate the drum in a winding direction when suddenly rotated in the other direction, of an electrically operated motor having an armature normally out of operative relation with the drum to rotate the drum in a winding direction when energized at will of an operator, a source of power to energize the motor, electrically controlled means under control of the operator to connect said source of power to the motor to energize the same and operatively connect the armature to the drum, electrically operated movable means arranged when energized to operatively connect the drum to the motor at will of an operator whereby the armature rotated by the drum revolving in an unwinding direction and means under control of the operator to connect said source of power to the electrically operated movable means to energize the same.

18. The combination with a trolley pole tender provided with a reel rotatable in a winding and an unwinding direction of means, under control of a vehicle operator, to be operatively connected and disconnected from the reel to retard the rate of rotation of the reel in an unwinding direction when connected to the reel.

19. In combination, a vehicle, a pivoted trolley pole biased to move upwardly about its pivot, means to receive and releasably hold the pole in its lowered position, means under control of the vehicle operator and associated with the vehicle to act upon the first said means to effect a release of the holding means at will of the operator to permit the pole to rise and means to lower the pole and to control the rate of rise of the pole after its release.

20. In combination, an electrically operated vehicle, a frame mounted on the vehicle, a latch associated with the frame to receive and hold in its lowered position a trolley pole mounted on the vehicle, and release means operable by the vehicle operator from a position on the vehicle to operate the latch to its non-holding position to release the pole, control means effective simultaneously with the release of the pole to control the rate of rise of the pole and means operable by the vehicle operator from a station remote from the release means and control means to effect operation of the last two said means.

21. The combination with a trolley pole retriever having a rope-winding drum and mechanism including a gear for rotating the drum, of an electric motor including driving gearing normally out of operative relation with the gear, to drive the gear, the motor provided with a pivotally mounted field and an armature and its shaft rotatable relative to the field, the field and armature having spaced and parallel axes of rotation, the driving gearing arranged to move into mesh with the gear associated with the drum and rotate the same in a rope-winding direction when the motor is energized, a shift-gear arranged to operatively connect the aforesaid gear to the said driving gearing at will of an operator when the said driving gearing associated with the armature is out of mesh with the said gear associated with the drum, to rotate the armature to control the speed of rotation of the drum when the drum is rotated in a rope-unwinding direction, means controlled by the operator to energize the motor to effect aforesaid rotation of the drum and electrically operated means to move the shift-gear to operatively connect the said gear.

22. A trolley tender for a pole with collector to engage a trolley wire comprising a casing, a reel mounted in the casing to rotate in two directions, a spring to rotate the reel in one direction to wind a trolley rope thereon to lower the trolley pole, means interposed between the reel and spring to automatically connect the spring and reel and release the spring to rotate the reel to wind the rope thereon when the pole accidentally moves upwardly from its normal position relative to the trolley wire, an electrically operated motor adapted when energized to be automatically and operatively connected to the reel and to rotate the reel in a rope winding direction, and electrically operated means when energized to operatively connect the reel to the motor to rotate the motor armature to retard the rate of rotation of the reel due to the upward pull of the trolley pole upon the rope connecting the pole and reel and means to disconnect the reel from the motor when the electrically operated means is de-energized.

23. The combination with a trolley pole tender having a reel rotatable in a winding and an unwinding direction, of power means capable of driving and being driven and of being operatively connected to and disconnected from the reel, at will of an operator, to rotate the reel in a winding direction when connected thereto and driving the reel and to retard the rate of rotation of the reel in a winding direction when connected thereto and driven thereby.

24. The combination with a trolley pole tender having a reel normally rotatable in a winding and an unwinding direction, of an electrically

operated motor capable of driving and being driven and being operatively connected to and disconnected from the tender, at will of an operator, to rotate the reel in a winding direction when energized and connected to the tender and to retard the rate of rotation of the reel in an unwinding direction when connected to the tender and driven thereby.

25. In combination a vehicle, a trolley pole with collector to engage a trolley wire, latching means on the vehicle to releasably hold the pole in its lowered position, electrically operated means acting upon the latching means to effect the release of the pole, a pole tender mounted on the vehicle and provided with a rotatable reel connected to the pole by flexible means whereby the raising and lowering of the pole is controlled, automatically operating means to rotate the reel in a winding direction to lower the pole when the collector jumps the wire, means to retard the rate of rotation of the reel in a rope-unwinding direction when the pole is released and electrically operated means to operatively connect the retarding means to the reel when the pole is released by the latching means and means under control of an operator to simultaneously energize the aforesaid electrically operated means.

26. A system comprising, a vehicle, a source of power on the vehicle, a pair of spaced and insulated trolley poles each with a current collector to engage the trolley wires of opposite polarity and biased to a raised position, means to hold each pole in its lowered position, electrically operated releasing means acting on the hold-down means to release the poles, electrically controlled means for each pole to control the rate of rise of the pole when released, means connecting each pole to its last said means, manually operated means to simultaneously control the energization of the aforesaid electrically operated means to release the poles and permit the poles to rise under controlled speed and means to automatically de-energize the aforesaid electrically controlled means when both collectors are in engagement with their respective trolley wires.

ERNST A. LARSSON.