United States Patent [19]

Hollier, Jr.

[11] **3,780,626**

[45] **Dec. 25, 1973**

[54] **DEVICE FOR THINNING CELLULOSIC STRIPS**

[75] Inventor: **Joseph H. Hollier, Jr.**, Pearcy, Ark.

[73] Assignee: **Sutco, Inc.**, Hot Springs, Ark.

[22] Filed: **July 25, 1972**

[21] Appl. No.: **274,979**

[52] **U.S. Cl.** ..... **93/1 G**

[51] **Int. Cl.** **B24b 19/22**, B26d 3/02

[58] **Field of Search** ..... 93/1 G, 1 R, 36.5 SS

[56] **References Cited**

UNITED STATES PATENTS

2,982,186	5/1961	McKeen	93/1 G
3,243,877	4/1966	Scholl	93/1 G UX
3,293,996	12/1966	Luning	93/1 G

Primary Examiner—Frank T. Yost

Attorney—George F. Helfrich

[57] **ABSTRACT**

An advancing cellulosic strip is caused to impinge tangentially upon the exterior, abrasive surface of a drum, which is rotatably mounted and driven on its longitudinal axis. The advancing cellulosic strip is urged into congruity with the exterior, abrasive surface of the drum over an area on the drum defined by an arc thereon of at least about 10°.

1 Claim, 4 Drawing Figures

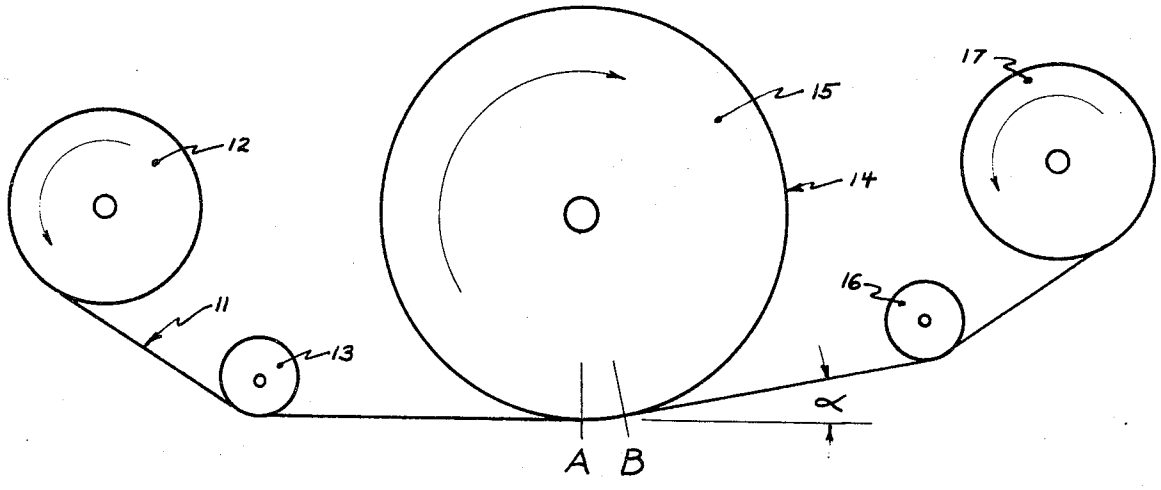

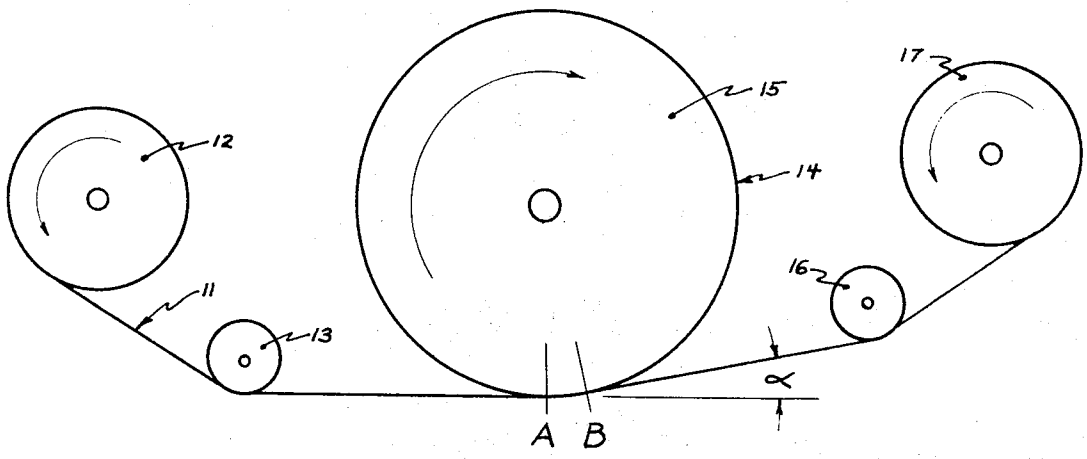

FIG. 1

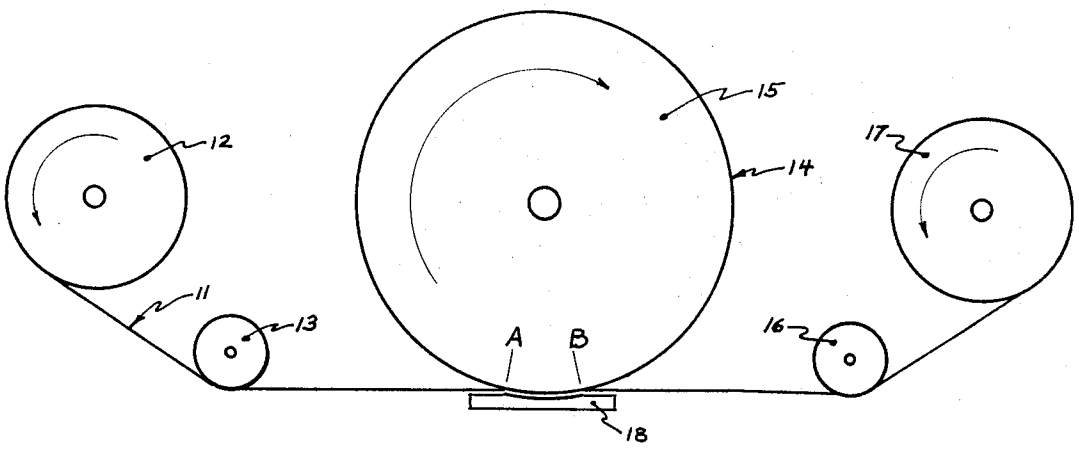

FIG. 2

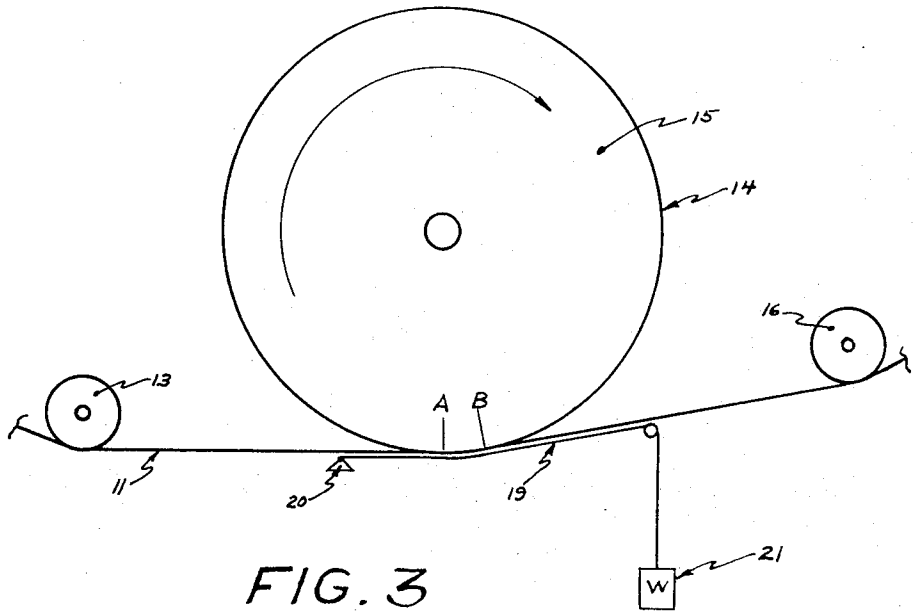

FIG. 3

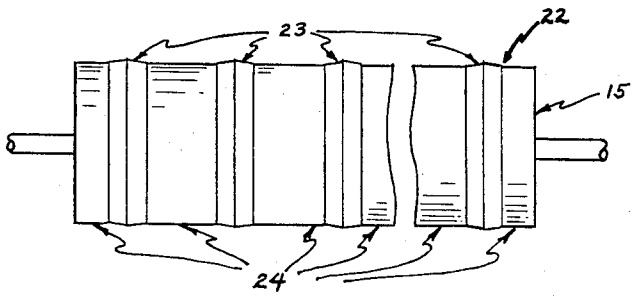

FIG. 4

DEVICE FOR THINNING CELLULOSIC STRIPS

BACKGROUND OF THE INVENTION

1. Field of the Invention

This invention relates to a device for thinning cellulosic fiber strips. It relates in particular to a device for thinning paper strips which are advantageously utilized in covering the joints between abutting wallboard edges.

2. Prior Art

In the fabrication of cellulosic fiber strips, it is often necessary that the strip be thinned in one or more areas. For example, in the production of cellulosic fiber strips for utilization in the covering and reinforcing of corner joints formed by abutting wallboard edges (such strips being generally referred to as "wallboard tape"), it is generally necessary to bevel or feather the wallboard tape at its edges in order to afford the formation of an invisible wallboard joint. Moreover, as a number of varieties of wall-board tape are provided with particular areas having small perforations or slits therein, it has been found highly desirable to thin these areas after the perforating operation has taken place, in order to preclude the presence of any raised sections and to ensure the absence of burrs or rough edges in the perforations themselves.

Accordingly, many expedients have been devised for thinning cellulosic fiber strips, especially those employed as wallboard tape. Because of its simplicity and economy of application, the principle most often employed is that of thinn by abrasion. Typical examples of the application of this principle may be found in the following U.S. Pat. Nos.: 1,494,604; 2,180,433; and 2,982,186.

Notwithstanding the acknowledged efficacy of these and similar expedients, they are found wanting, as is evident from an examination of their characteristics: An idler roll or equivalent means is employed to urge the advancing cellulosic strip into contact with the abrasive surface of a cylindrical drum which is driven on its longitudinal axis. In these devices the positions of the idler roll and abrading drum are fixed and the clearance therebetween is critical. Frequent adjustment of this clearance — which is both troublesome and expensive—is required to control the degree of abrasion and prepare a satisfactorily thinned strip.

Moreover, attempts have been made to urge the idler roll by resilient means (eg. a spring), forcing the advancing cellulosic strip into contact with the abrasive surface of the cylindrical drum at a constant pressure. However, under such conditions the idler roll is caused to bounce if the surface of the abrading drum is not perfectly cylindrical, resulting in serious gouging of the surface of the cellulosic strip.

That all such disadvantages are completely unacceptable is clear in view of today's requirements for greater uniformity in finished products as well as enhanced speed and increased efficiency in manufacturing operations.

SUMMARY OF THE INVENTION

It is consequently the primary object of this invention to provide a simple, economical, and efficient device for thinning cellulosic fiber strips, the efficacy of the device being essentially independent of the ordinarily-encountered, small variations in its construction.

In accordance with the present invention, this object and these advantages are achieved, and the disadvantages of the prior art are obviated by providing a device for thinning an advancing cellulosic strip, which device comprises:

a. A drum rotatably mounted and driven on its longitudinal axis, the exterior surface of the drum comprising abrasive material;

b. Means for causing the cellulosic strip to advance over the exterior surface of the drum in a direction substantially perpendicular to the direction of the longitudinal axis of the drum; and

c. Means for urging the advancing cellulosic strip into congruity with the exterior surface of the drum over an area thereof defined by an arc thereon of at least about 10°.

BRIEF DESCRIPTION OF THE DRAWING

For a more complete understanding of the present invention, reference should be made to the detailed description of the preferred embodiments thereof, which is set forth below, which description should be read together with the accompanying drawing, wherein:

FIG. 1 is a schematic side elevation depicting a preferred embodiment of the device of the present invention;

FIG. 2, in schematic side elevation, illustrates another distinct and preferred embodiment of the device of the present invention;

FIG. 3, also in schematic side elevation, shows yet another distinct and preferred embodiment of the device of the present invention;

FIG. 4 is a schematic view of a special abrading drum which may be used in any of the embodiments depicted in FIGS. 1–3.

DESCRIPTION OF THE PREFERRED EMBODIMENTS

Referring now to the drawing, FIG. 1 shows a continuous cellulosic fiber strip 11 being unwound from supply roll 12, which is provided with a brake, and being guided by idler roll 13 so that it passes across the abrasive surface 14 of cylindrical sanding drum 15, which is driven in the direction shown. Sanding drum 15 can also be driven in the opposite direction. Strip 11 is subsequently guided by idler roll 16 to take up roll 17, which is driven in the direction shown, and upon which strip 11 is wound for subsequent use. The tension on strip 11 effected by take up roll 17 and the brake on supply roll 12, and the position of idler roll 16 combine to cause a deviation in the otherwise tangential path of strip 11 over the surface 14 of sanding drum 15, such deviation being represented as angle α. The result of this deviation is to effect intimate contact of surface 14 with the opposed surface of strip 11 over an area on surface 14 defined by arc AB, as strip 11 is continuously passed over surface 14. Arc AB is at least about 10°, and, most advantageously, at least about 15°. Observation of strip 11 removed from take up roll 17 reveals an evenly thinned article, free of irregularities and imperfections. The degree of thinning of strip 11 can be readily regulated by proper choice of abrasive surface 14 and by adjusting the tension on strip 11, or by varying the position of idler rolls 13 and 16, or by adjusting the speed of take up.

Referring now to FIG. 2, there is shown another embodiment of a device according to the present inven-

tion. In this embodiment, advancing cellulosic strip **11** from supply roll **12** is urged into intimate contact with abrasive surface **14** of sanding drum **15** over an area on surface **14** defined by arc AB by means of resilient pad **18**, which is forced against strip **11**, causing the opposite side thereof to conform to the abrasive surface **14** with the desired arc. As in the embodiment shown in FIG. **1**, arc AB is at least about 10°, and preferably, at least about 15°, in order that the thinning of strip **11** be effected evenly and efficiently in spite of any small variations in the construction of sanding drum **15**. Idler rolls **13** and **16** serve to guide advancing strip **11** in a tangential direction over surface **14**, whence it is wound upon take up roll **17**, which is driven in the direction indicated.

FIG. **3** depicts yet another embodiment according to the present invention, wherein advancing cellulosic strip **11** is guided by means of idler rolls **13** and **16** over the abrasive surface **14** of sanding drum **15**, and is urged into intimate contact with abrasive surface **14** over an area thereon defined by arc AB, by means of web **19**, which is anchored at **20** and is forced against strip **11** by tension supplied by weight **21**. Web **19** is advantageously constructed from plastic, metal or any resilient material which is flexible and resistant to wear. As in previously described embodiments, arc AB is at least about 10°, and, preferably at least about 15°.

If desired for any purpose, it is possible to cause strip **11** to be thinned over less than an entire surface thereof. For example, if strip **11** is a wide strip from which narrower strips of wallboard tape will be prepared, it is generally advantageous to thin or sand the tape so that after subsequent cutting into smaller strips, the edges thereof will be thinned. This is conveniently accomplished by the utilization of a sanding drum **15** having a specially contoured abrasive surface **22**, as depicted schematically in FIG. **4**. This specially contoured abrasive surface **22** may be employed in any of the previously described embodiments of the device of the present invention. As seen from FIG. **4**, surface **22** comprises raised areas **23** and level areas **24**, the raised areas **23** being positioned so that subsequent contact with the cellulosic strip **11** will be effected along longitudinal areas thereof where thinning is desired.

Although the present invention has been described in detail with respect to certain preferred embodiments thereof, it should be apparent to those of skill in the art that variations and modifications in this detail may be made without any departure from the spirit and scope of the present invention, as defined in the hereto-appended claim.

What is claimed is:

1. A device for thinning an advancing cellulosic strip, which device comprises:

a. A drum rotatably mounted and driven on its longitudinal axis, the exterior surface of the drum comprising abrasive material;

b. Means for causing the cellulosic strip to advance over the exterior surface of the drum in a direction substantially perpendicular to the direction of the longitudinal axis of the drum; and

c. Means for urging the advancing cellulosic strip into congruity with the exterior surface of the drum over an area thereof defined by an arc thereon of at least about 10°.

* * * * *