Feb. 2, 1965 W. LIMBERGER 3,168,022

APPARATUS FOR PRODUCING PHOTOCOPIES

Filed Oct. 11, 1962 2 Sheets-Sheet 1

FIG. 1

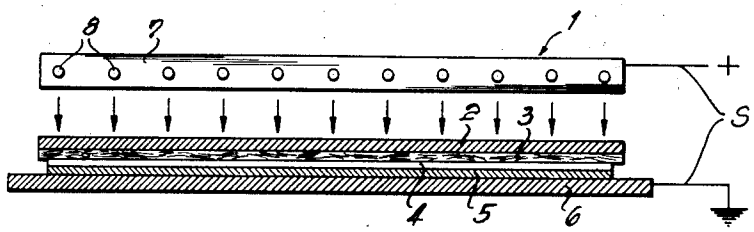

FIG. 2

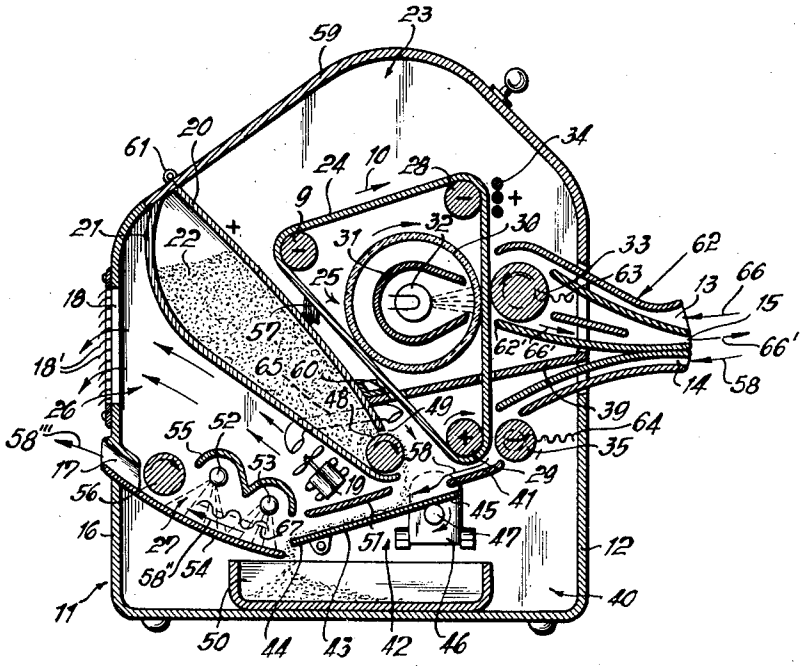

INVENTOR

WALTER LIMBERGER

BY Beaman & Patty

ATTORNEYS

Feb. 2, 1965 W. LIMBERGER 3,168,022

APPARATUS FOR PRODUCING PHOTOCOPIES

Filed Oct. 11, 1962 2 Sheets-Sheet 2

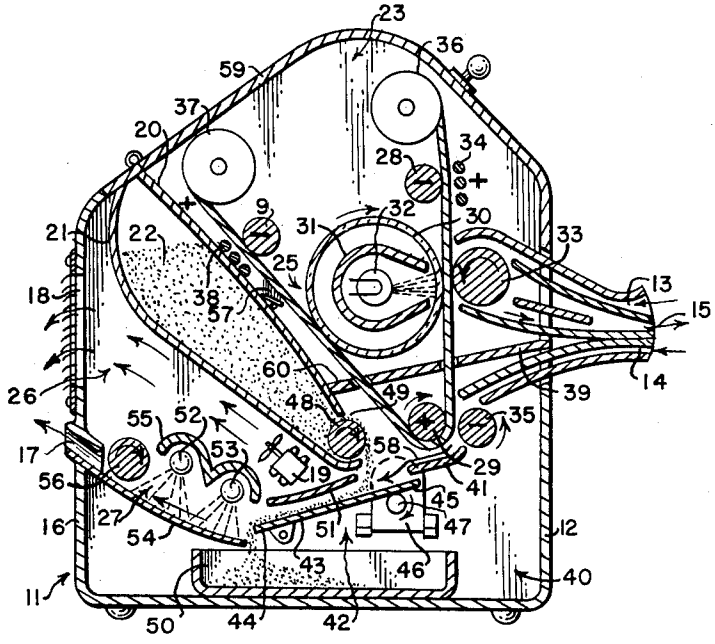

FIG. 3

INVENTOR

WALTER LIMBERGER

BY Beaman & Beaman

ATTORNEY

United States Patent Office 3,168,022
Patented Feb. 2, 1965

3,168,022

APPARATUS FOR PRODUCING PHOTOCOPIES

Walter Limberger, Hamburg, Germany, assignor to Lumoprint Zindler K.G., Hamburg, Germany, a corporation of Germany

Filed Oct. 11, 1962, Ser. No. 229,853
Claims priority, application Germany, Mar. 8, 1956, L 24,300; Mar. 12, 1956, L 24,336
12 Claims. (Cl. 95—1.7)

My present invention relates to a method of and an apparatus for photographically reproducing an original, i.e. a picture or other message appearing on a surface of a master sheet, on an image-receiving surface of a copy sheet. This application is a continuation-in-part of my copending application Ser. No. 644,857 filed March 8, 1957, now abandoned.

Generally, pictorial messages may be reproduced episcopically or by translumination of the original, yet the latter method is feasible only with master sheets of adequate and substantially uniform light transmissivity. Since this requirement can be satisfied only in exceptional cases, episcopic illumination is usually employed. This type of reproduction gives rise to a geometrically reversed or laterally transposed mirror-type image on the first receiving surface so that a transfer to a second receiving surface is required for the production of a geometrically true copy of the original message. To this end it is necessary to provide an intermediate carrier of a photosensitive layer, loosely referred to as the "negative" in the photographic art, in addition to the copy sheet or "positive."

Difficulties have heretofore been encountered in attempts to have the two aforedescribed image transfers (from the original to the "negative" and thence to the "positive") performed automatically, in a continuous process, since the proper guidance of the sheet posed problems particularly where the "negative" image was to be produced by the so-called reflex technique, i.e. with translumination of the sufficiently light-transmissive (translucent or transparent) intermediate carrier while its photosensitive layer was in contact with the message side of the master.

It is, therefore, an object of my present invention to provide a method of and means for automatically producing geometrically true, i.e. laterally nonreversed, photocopies with the aforedescribed reflex technique which dispenses with the need for an optical focusing system and enables the use of lower-powered light sources as well as lower-sensitivity photoreactive material which can be more conveniently handled in ambient light.

A more specific object is to provide such method and means in conjunction with a xerographic process in which an image of the original is first produced on a photoconductive layer supported by a light-transmissive carrier and is subsequently transferred to the copy sheet as a geometrically true replica of the original.

It has already been proposed to produce xerographic copies by juxtaposing an electrically chargeable copy sheet with a carrier for a photoconductive layer during exposure of the latter, this arrangement enabling the formation of the final electrostatic-charge pattern on an image-receiving surface which is not photoconductive and is therefore not adversely affected by incident light. A system of this type is, however, unsuitable for use with reflex exposure since in such process the photosensitive layer must contact the message side of the original, for sharpness of definition, and thus cannot simultaneously confront the copy sheet.

In accordance with a feature of this invention, I utilize the fact that it is possible to maintain the charge pattern on a photoconductive layer long enough to permit the

establishment of a mirror image of that charge pattern on a copy sheet which is contacted with that layer after the latter has been separated from the master sheet. Thus, in the system disclosed in detail hereinafter, a photosensitive layer on a carrier of light-transmissive sheet material is contacted with the message side of a master sheet at a first location, a latent image being formed at this time in the layer by translumination, and is subsequently contacted with an image-receiving surface of a copy sheet at a second location where its message content is transferred to that surface to produce a geometrically nonreversed replica of the original.

Since the process is to be carried out automatically from the introduction of the master and copy sheets into an enclosure to the return of the master and the emergence of the finished copy, these two sheets and the sheet member serving as a carrier for the photosensitive layer must be guided within the enclosure in such manner that their paths touch at the aforementioned locations but do not intersect lest the presence of one sheet member block the progress of the other. This problem is solved, pursuant to another feature of my invention, by guiding the master sheet through the enclosure along a nearly closed, looped path from a first inlet to a first outlet disposed between that inlet and an adjacent second inlet for the copy sheet, the latter being ejected from the enclosure at a second outlet remote from these inlets. The path of the photosensitive-layer carrier runs partly parallel and close to that of the master sheet (in the region of the exposure device) and partly parallel and close to the path of the copy sheet (in the region of a pair of pressure rollers or the like serving as an image-transfer means), the rates of travel of the several sheet members being so correlated that the same area of the photosensitive layer meets first with the message side of the master sheet and then with the image-receiving side of the copy sheet when these sheets have been substantially concurrently inserted into the enclosure or housing of the copying apparatus. For proper operation, the sheets should be so inserted that the message side of the master lies on the outside of the loop and, at the point of entry, faces in the same direction as the image-receiving side of the copy sheet.

In the system specifically described hereinafter, in which the photosensitive layer is of the xerographic type and the image-receiving surface of the copy sheet is electrically chargeable to become the bearer of an electrostatic charge pattern, the xerographic layer is subjected to a transverse charging field both on its approach to the exposure site and at its point of contact with the chargeable copy sheet. The relative polarities of the two fields may be selected at will so that the final image will be either a tonally correct ("positive") or a tonally inverted ("negative") replica of the original; since the former is usually desired, I prefer to establish these fields with opposite polarities as seen by the xerographic layer. Advantageously, pursuant to a further feature of my invention, the means for producing the second field comprises a pair of electrodes designed as co-operating pressure rollers between which the xerographic-layer carrier and the copy sheet pass in contact with each other. Either charging field, though unidirectional, may be produced by one or more short high-voltage pulses rather than by a sustained D.-C. voltage as is well known per se.

The above and other objects, features and advantages of my invention will become more fully apparent from the following detailed description, reference being made to the accompanying drawing in which:

FIG. 1 is a diagramamtic representation of an electrode arrangement adapted to be used in a system according to the invention;

FIG. 2 is a sectional view of an apparatus embodying the invention; and

FIG. 3 shows a partial modification of the apparatus of FIG. 2.

In FIG. 1 I have shown at 1 and 6 a pair of electrodes connected across a source S of unidirectional voltage (electrode 1 being positive). A carrier 2 of transparent of translucent sheet material (e.g. paper) is coated with a xerographic layer 3, e.g. of zinc oxide. Juxtaposed therewith is a copy sheet 5, e.g. of paper, provided with a chargeable layer 4 which may consist of a resinous material (e.g. polystyrene) with a high dielectric constant. The two sheet members 2 and 5, with their layers 3, 4 touching each other, are disposed between the electrodes 1 and 6 within the electrostatic field thereof. While the grounded electrode 6 is shown as a plate (e.g. of copper), electrode 1 has been represented by way of illustration as a set of parallel wires 8 stretched across a frame with sufficiently close spacing to maintain the field substantially uniform. The voltage difference between the electrodes may range approximately between one and ten kilovolts, with a spacing between electrode 1 and sheet member 2 of the order of 1 cm.; it will be apparent that this clearance could be reduced or even eliminated if a dielectric other than air were interposed between the electrode 1 and the stacked sheets to prevent arc discharges, or if insulation or clearance were present between the stack and the electrode 6.

If the xerographic layer 3 carries a latent electrostatic image from a recent exposure to nonuniform illumination, its charge pattern will combine with the uniform electrostatic field to induce on the layer 4 a similar charge pattern whose configuration will be either identical with or complementary to that of the charge pattern on layer 3, depending upon the polarity of source S relative to that of the original charge. Layer 4, when developed by conventional xerographic methods (e.g. dusting with toner particles), will thus exhibit a visible image which will be the tonally correct or inverted but laterally transposed replica of a similar image that would be seen if layer 3 were so developed. For a good image transfer it is desirable to maintain the contacting sheets under pressure, as will be more fully described with reference to FIG. 2. If the sheets are arranged to move between the electrodes, the extent of the latter in the direction of motion (thus, the number of wires 8) may of course be reduced.

Reference will now be made to FIG. 2 which illustrates a practical embodiment of the invention. The apparatus shown in this figure, designed as a table model, comprises a substantially light-tight enclosure formed by a housing 11 and a cover 59 hinged thereto at 61. The front end of the enclosure is provided with a sheet-guiding structure 62 supported on the housing wall 12, this structure forming a first inlet slot 13 for a master sheet, a second inlet slot 14 for a copy sheet and an intervening outlet slot 15 for the master. A second outlet slot 17, serving for the discharge of the copy sheet, is formed on the rear wall 16 of the housing, thus at a location remote from the slots 13–15. Rear housing wall 16 further has an air vent 18, provided with louvers 18', to enable the outflow of a stream of cooling air generated within the housing by a blower 19.

The interior of the enclosure 11, 59 is divided into an upper compartment 23 and a lower compartment 26, 40 by a partition composed of a nearly horizontal shelf 39 and a sloping inner wall 20; the latter defines, together with another sloping inner wall 21, a storage chamber 22 for toner particles which may be a distinctively colored comminuted synthetic resin. Upper compartment 23 contains two electrically conductive rollers 9, 28 connected to a source of relatively negative potential (e.g. ground, as in FIG. 1), a pair of co-operating stationary electrodes formed by sets of parallel wires 34, 38 which are connected to a source of relatively positive potential (such as the ungrounded terminal of the voltage supply

S in FIG. 1), an illuminating device 25 including a rotatable transparent cylinder 30 and an elongated lamp 31 of horseshoe-shaped cross-section, and a pressure roller 33 juxtaposed with cylinder 30 within the guide structure 62. An endless web 24 of sheet material, serving as a carrier of a xerographic layer of the type described in connection with FIG. 1, is wound in the form of a triangular loop around the electrode rollers 9, 28 and a similar roller 29 disposed in the section 40 of the lower compartment of the apparatus. With its xerographic layer positioned on the outside of the triangular loop, web 24 moves in such a sense (arrow 10) that its descending run passes between roller 33 and cylinder 30 whereas its ascending run slopes upwardly on the other side of the cylinder along a path substantially parallel to and slightly spaced from the wall portion 20; these two runs pass through slots in partition member 39 and define an acute angle at whose vertex the roller 29 is located. Roller 29, connected to positive potential, co-operates with a negatively polarized counter-pressure roller 35 bearing externally upon the looped web 24. To insure the necessary contact pressure, rollers 33 and 35 may be biased toward the web 24 by suitable means such as springs 63, 64 acting upon their respective journal bearings.

The roller electrodes 29, 35 constitute an image-transfer mechanism disposed within the space 40 which also accommodates a developing stage including a fixed guide plate 41, an oscillatable guide plate 43 and a rough-surfaced distributor roller 48 in the outlet 49 of chamber 22 for directing a supply of powder from that chamber toward the latter plate. A vibrator, generally designated 42, comprises a motor 46 which drives a cam disk 47 supporting the free end of plate 43 whose other end 44 is pivotally secured to the housing 11. Excess toner falling from the lower end 44 of plate 43 is caught in a removable receptacle 50 at the bottom of the housing.

Ducts 65 (only one shown) may be used to recirculate part of the air stream produced by blower 19 so as to create a lower-velocity vortex in the region of feed roller 48 to insure a more uniform distribution of the powder and to keep it from settling on the web 24. A brush 57 may be mounted on the partition member 20 to sweep entrained dust and powder particles off the ascending run of web 24 and into a removable pan 60 on shelf 39.

Another stationary guide plate 51 spacedly overlies the vibratile plate 43 and separates the transfer and developing space 40 from the space 26 containing a fixing stage 27. This fixing stage comprises a plurality of infrared radiators 52, 53 and an associated reflector 55 above a guide plate 54 leading toward outlet 17; a discharge roller 56, suitably synchronized with the other positively driven rollers 29, 33, 35 and 48, serves for the ejection of a copy sheet whose movement through the apparatus has been symbolized by the arrows 58, 58', 58'' and 58'''. A guide member transparent to the radiation from heaters 52, 53, such as a wire grid 67, may be disposed above plate 54 to prevent the heated sheet from curling up ahead of the roller 56.

In operation, a master sheet symbolized by arrows 66, 66', 66'' is introduced into slot 13 substantially concurrently with the insertion of a copy sheet into the slot 14 closely spaced therefrom, it being understood that precise synchronization is not necessary but that the sheets may follow each other with a predetermined delay. This master sheet is guided by the structure 62 over a looped path terminating at the outlet slot 15. At the location where this looped path runs parallel to the path of carrier web 24, i.e. between cylinder 30 and pressure roller 33, a mirror image of the original carried on the master sheet is produced as an electric-charge pattern on the xerographic layer of the web which at this point is transluminated by light from the source 32 while the layer is in contact wtih the message side of the master. The xerographic layer, previously charged upon its passage between electrodes 28 and 34, runs at the same speed as

the master from which it is separated by a deflecting plate **62'** before leaving the upper compartment **23**. When the area of the xerographic layer bearing the electric-charge pattern arrives at the gap between electrode rollers **29** and **35**, it encounters the copy sheet whose chargeable surface is pressed against that layer by the action of the spring-loaded roller **35**. The image is thus transferred to the copy sheet, in the manner previously described with reference to FIG. 1, whereupon the sheet separates from the carrier web **24** and slides downwardly along the guide plates **41** and **43** to receive the toner from feed roller **48**. With the toner powder evenly distributed over the surface of the copy sheet, a geometrically true and (owing to the relatively inverted polarities of electrode arrangements **28, 34** and **29, 35**) tonally correct replica of the original will be rendered visible on this sheet as the powder selectively adheres to its charged surface while the excess is shaken off by the action of vibrator **42**. The copy sheet then enters the fixing device **27** where the adhering powder is fused unto its upper surface by the radiant heat of elements **52** and **53**. With suitable dimensioning of the copy sheet, its leading edge will be gripped by the discharge roller **56** before its trailing edge breaks contact with the web **24** so that continuity of motion is assured. It will be apparent that virtually no limits are set to the lengths of the master and copy sheets since they pass through the device without mutual interference and since the transfer of the message content at the locations of rollers **30, 33** and **29, 35** occurs in the form of successive line images. At the same time the "negative" image registered on the carrier web **24** is canceled by the electrode arrangement **9, 38**, whose polarity is the reverse of that of electrode arrangement **29, 35**, before the same area of the xerographic layer is reused when passing between electrodes **28** and **34**.

FIG. 3 illustrates a modification which differs from the system of FIG. 2 in that the carrier web, instead of traveling in a closed loop, is unwound from a supply reel **36** and wound upon a take-up reel **37**. The rewound carrier, owing to the provision of canceling electrodes **9** and **38**, can be promptly reused upon the interchange of reels **36** and **37**.

While I have disclosed an apparatus in which the means for continuously guiding the several sheet members through an enclosure are designed to advance each of these members at substantially constant speed, it is to be understood that such uniformity of motion is not absolutely necessary and that, in particular, one of the sheets (e.g. the copy sheet) may be detained within the enclosure and subsequently released upon insertion of another sheet (e.g. the master) so that both will advance in previously timed relationship toward their destination. Reference is hereby specifically made to my copending application Ser. No. 827,833, filed July 17, 1959, for a disclosure of detent means adapted to be released by one sheet in order to unblock the advance of another.

Further modifications of the system described and illustrated are, of course, possible without departing from the spirit and scope of the invention as defined in the appended claims.

I claim:

1. A device for the production of copies of an original by electrostatic means, comprising a housing, a belt-shaped carrier of sheet material guided in said housing along a path extending over at least two sides of a triangle, said carrier being provided externally thereof with a xerographic layer, a deflecting roller within said housing embraced by said carrier at the junction of said two sides, an exposure device within said path past which said carrier is guided prior to being engaged by said deflecting roller, a pressure roller rotatably supported adjacent said carrier within said housing at the side opposite said exposure device, a first electrode arrangement within said housing adjacent said path through which said carrier is passed prior to passing between said exposure device and said pressure roller, first introducing means in said housing for feeding a master sheet bearing an original between said pressure roller and said carrier in order to produce an inverted latent picture in said xerographic layer, a counterpressure roller juxtaposed with said deflecting roller on the opposite side of said carrier, said deflecting roller and said counterpressure roller being in the form of electrodes and constituting a second electrode arrangement adjacent said path, said first and second electrode arrangements being so connected to an electric power supply as to produce unidirectional fields of opposite polarities across said carrier, second introducing means in said housing for feeding a copy sheet with an electrically chargeable surface to said second electrode arrangement between said counterpressure roller and said carrier to press the copy sheet with its chargeable surface into contact with said xerographic layer so that a nonreversed latent image is created on the copy sheet, a storage chamber for developing powder within said housing, powder-distributing means communicating with said chamber, transport means arranged within said housing for guiding the copy sheet from said second electrode arrangement past said powder-distributing means so that the powder is distributed onto said chargeable surface, said transport means defining a support for said copy sheet beginning adjacent said deflecting roller, means for oscillating a portion of said support adjacent said powder-distributing means in order to remove excess powder, fixing means disposed adjacent said support beyond said powder-distributing means for fusing the powder remaining on said copy sheet onto said chargable surface, and discharge means for ejecting said copy sheet from said housing.

2. A device as defined in claim 1 wherein said housing is internally provided with partition means forming an upper and a lower compartment therein, said partition means having slots respectively traversed by a descending and an ascending run of said carrier; said first electrode arrangement, said exposure device and said pressure roller being disposed in said upper compartment, said deflecting and counterpressure rollers and said transport means being disposed in said lower compartment.

3. A device as defined in claim 2 wherein said ascending run passes inclinedly upwardly through said partition means, the latter including a sloping wall portion spacedly extending below said ascending run substantially parallel thereto, further comprising stripper means on said wall portion engageable with said ascending run for removing entrained powder from said xerographic layer.

4. An apparatus for automatically producing copies by electrostatic means, comprising a housing provided with three closely spaced channels opening on one wall thereof, said channels being separated from each other by two closely spaced plate members and including a lower inlet channel and an upper inlet channel for admitting two juxtaposed sheets each edge-fed into a respective one of said channels, said sheets including a master sheet and a copy sheet, the third channel being positioned between said two inlet channels and forming a first outlet channel, said housing being further provided with a second outlet channel remote from said inlet channels; guide means in said housing for conveying said master sheet from one of said inlet channels over a looped first path to said first outlet channel and conveying said copy sheet from the other of said inlet channels over a second path to said second outlet channel; and transfer means in said housing for xerographically reproducing a message from said master sheet on said copy sheet during passage thereof over said first and second paths, respectively.

5. An apparatus for automatically producing copies by electrostatic means, comprising a housing provided with three closely spaced channels opening on one wall thereof, said channels being separated from each other by two closely spaced plate members and including a lower inlet channel and an upper inlet channel for ad-

mitting two juxtaposed sheets each edge-fed into a respective one of said channels, said sheets including a master sheet and a copy sheet, the third channel being positioned between said two inlet channels and forming a first outlet channel, said housing being further provided with a second outlet channel remote from said inlet channels; guide means in said housing for conveying said master sheet from said upper inlet channel over a looped first path to said first outlet channel and conveying said copy sheet from said lower inlet channel over a second path below said first path to said second outlet channel; and transfer means in said housing for xerographically reproducing a message from said master sheet to said copy sheet during passage thereof over said first and second paths, respectively.

6. An apparatus for automatically producing copies by electrostatic means, comprising a housing provided with three closely spaced channels opening on one wall thereof, said channels being separated from each other by two closely spaced plate members and including a lower inlet channel and an upper inlet channel for admitting two juxtaposed sheets each edge-fed into a respective one said channels, said sheets including a master sheet and a copy sheet the third channel channel being positioned between said two inlet channels and forming a first outlet channel, said housing being further provided with a second outlet channel remote from said inlet channels; guide means in said housing for conveying said master sheet from one of said inlet channels over a looped first path to said first outlet channel and conveying the other of said sheets from the other of said inlet channels over a second path to said second outlet channel; and transfer means in said housing for xerographically reproducing a message from said master sheet to said copy sheet during passage thereof over said first and second paths, respectively, said transfer means including a rotatable carrier member with an exposed peripheral surface movable along sections of said first and second paths, first and second roller means respectively disposed at said first and second paths for urging said master and copy sheet into contact with said surface during passage along said sections, and drive means for rotating said carrier member and said first and second roller means at such relative speeds that said master and copy sheets successively contact the same portion of said layer upon concurrent introduction into said inlet slots.

7. An apparatus for automatically producing copies by electrostatic means, comprising a housing provided with three closely spaced channels opening on one wall thereof, said channels being separated from each other by two closely spaced plate members and including a lower inlet channel and an upper inlet channel for admitting two juxtaposed sheets each edge-fed into a respective one of said channels, said sheets including a master sheet and a copy sheets, the third channel being positioned between said two inlet channels and forming a first outlet channel, said housing being further provided with a second outlet channel remote from said inlet channels; guide means in said housing for conveying said master sheet from said upper inlet channel over a looped first path to said first outlet channel and conveying said copy sheet from said lower inlet channel over a second path below said first path to said second outlet channel; and transfer means in said housing for xerographically reproducing a message from said master sheet to said copy sheet during passage thereof over said first and second paths, respectively, said transfer means including a rotatable carrier member with an exposed peripheral surface movable in a downward direction along sections of said first and second paths, first and second roller means respectively disposed at said first and second paths for urging said master and copy sheet into contact with said surface during passage along said sections, and drive means for rotating said carrier member and said first and second roller means at such relative speeds that said master and copy sheets successively contact the same portion of said layer upon concurrent introduction into said inlet slots.

8. An apparatus as defined in claim 6 wherein said carrier member is provided with a chargeable photoconductive layer at said peripheral surface thereof, said transfer means further including exposure means at a point of contact between said master sheet and said carrier member for producing a latent image of said master sheet on said layer, first electrode means ahead of said point of contact for charging said layer, second electrode means at a point of contact between said copy sheet and said layer for jointly charging said copy sheet and said layer, distributor means along said second path for applying comminuted toner material to the copy sheet so charged, and fixing means along said second path beyond said distributor means for fusing adherent toner material to the charged copy sheet.

9. An apparatus as defined in claim 8 wherein said first and second electrode means are provided with voltage-source means for producing unidirectional fields of opposite polarities across said layer.

10. An apparatus as defined in claim 8 wherein said exposure means comprises a light-transmissive roller forming part of said first roller means and a source of light disposed in said light-transmissive roller, said carrier member consisting of light-transmissive material translumінable by rays from said source.

11. An apparatus as defined in claim 8 wherein said first electrode means comprises at least one pressure roller forming part of said second roller means.

12. An apparatus as defined in claim 8, further comprising third electrode means disposed between said second and first electrode means for canceling the charge of said layer due to said second electrode means prior to recharging thereof by said first electrode means.

References Cited by the Examiner

UNITED STATES PATENTS

2,357,809	9/44	Carlson	95—1.7 X
2,588,699	3/52	Carlson	95—1.7 X
2,930,284	3/60	Limberger	95—75 X
2,946,272	7/60	Eisner et al.	95—77.5
3,005,389	10/61	Limberger	118—637
3,051,568	8/62	Kaprelian	95—1.7 X
3,058,405	10/62	Limberger	95—1.7 X

EVON C. BLUNK, *Primary Examiner.*

NORTON ANSHER, *Examiner.*