Sept. 29, 1953 W. J. DODGE 2,653,725

DRUM LIFT FOR INDUSTRIAL TRUCKS

Filed Nov. 22, 1949 2 Sheets-Sheet 1

Fig. 1

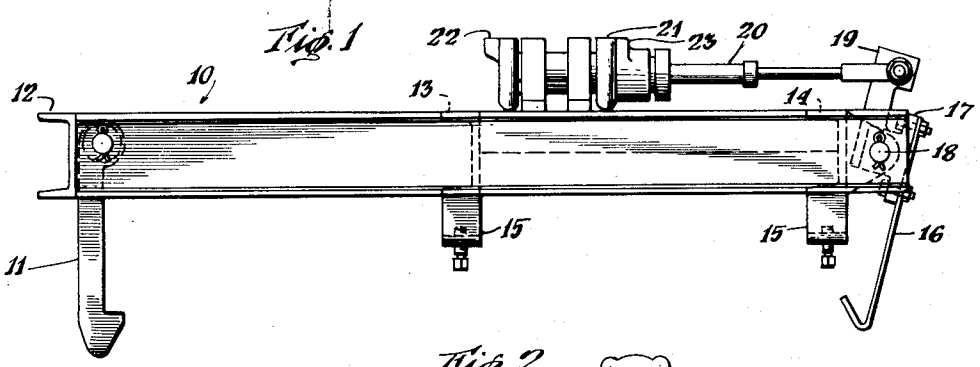

Fig. 2

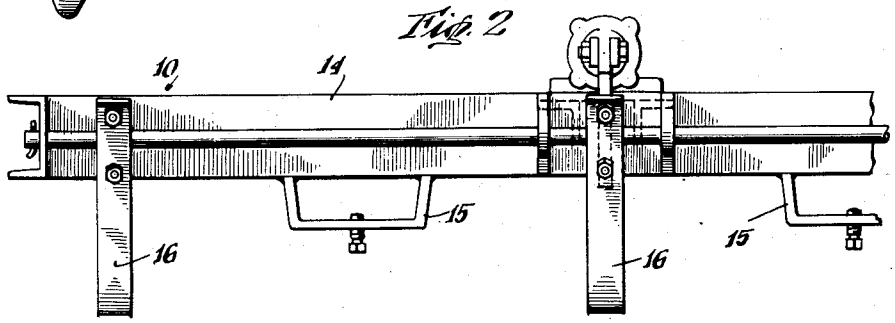

Fig. 4

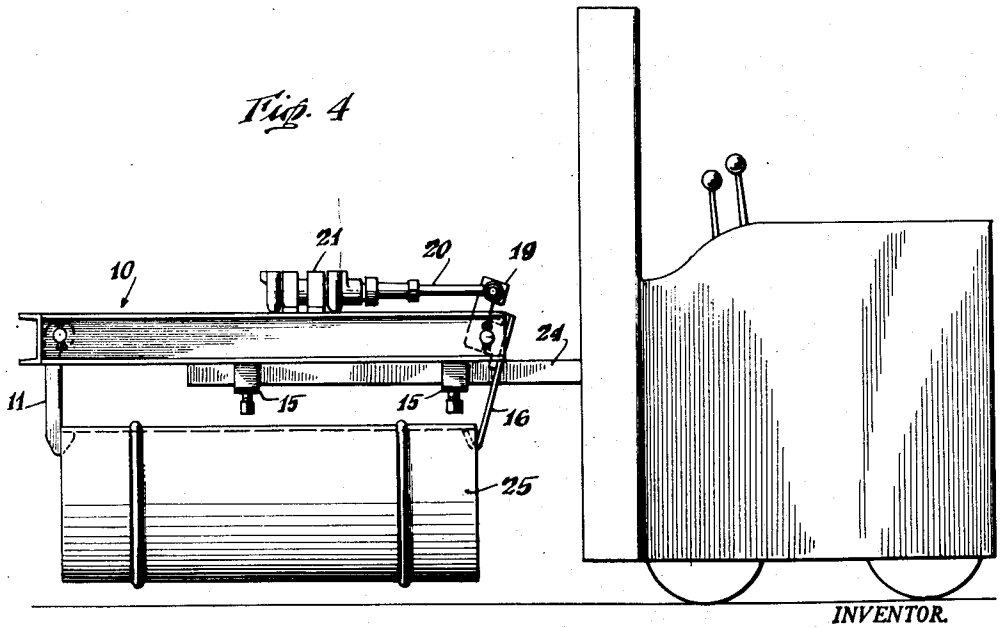

INVENTOR.

Wesley J. Dodge

BY

Charles A. Huggett

AGENT OR ATTORNEY

Sept. 29, 1953 W. J. DODGE 2,653,725

DRUM LIFT FOR INDUSTRIAL TRUCKS

Filed Nov. 22, 1949 2 Sheets-Sheet 2

Fig. 3

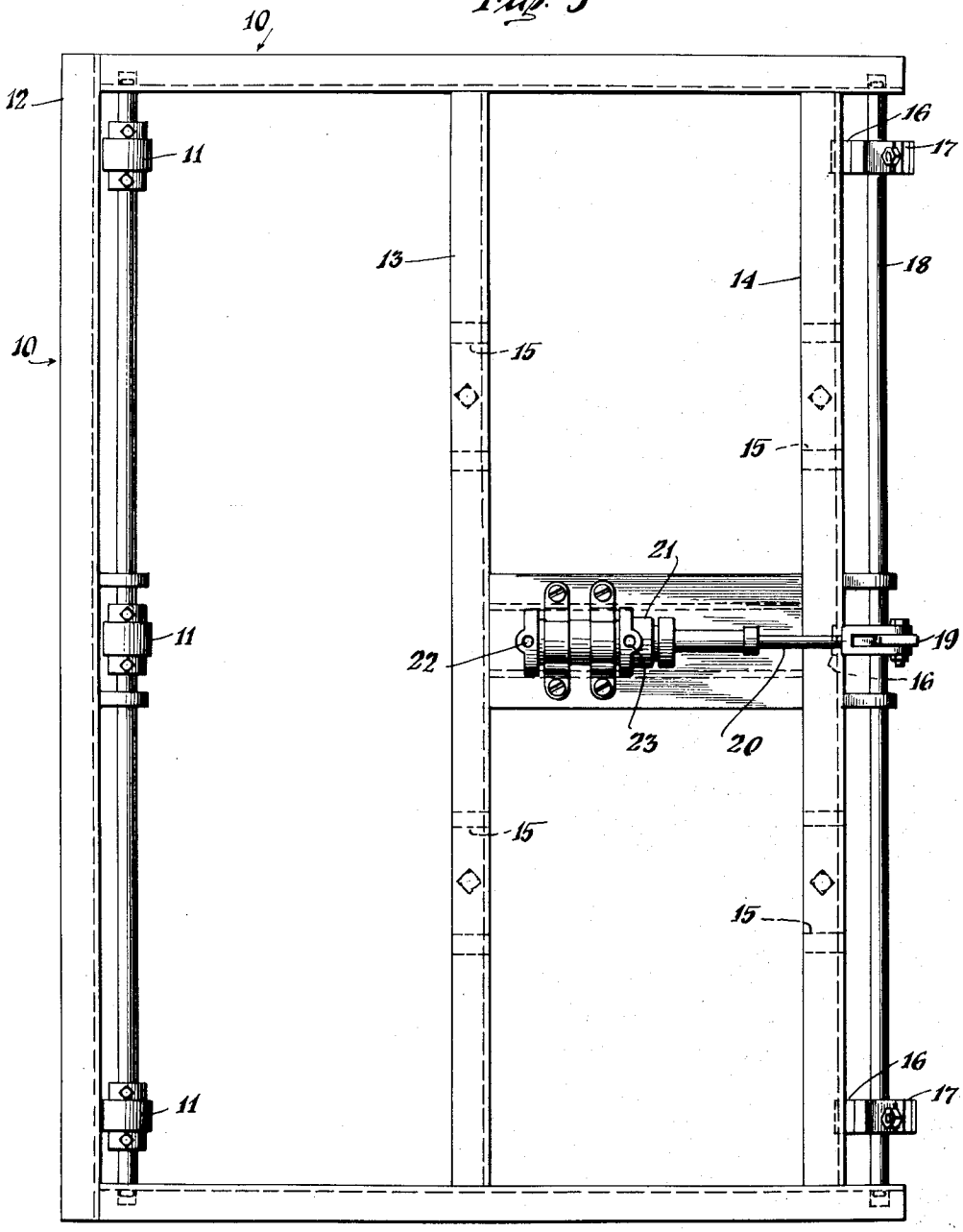

INVENTOR.
Wesley J. Dodge
BY
Charles A. Huggett
AGENT OR ATTORNEY

Patented Sept. 29, 1953 2,653,725

UNITED STATES PATENT OFFICE

2,653,725

DRUM LIFT FOR INDUSTRIAL TRUCKS

Wesley J. Dodge, Douglaston, N. Y., assignor to Socony-Vacuum Oil Company, Incorporated, a corporation of New York

Application November 22, 1949, Serial No. 128,865

3 Claims. (Cl. 214—651)

1

This application is directed to a means of automatically lifting barrels or drums in order that they may be rapidly moved or placed into storage. The application is more particularly directed to a device for rapidly and easily moving the standard petroleum oil drum.

In the petroleum industry, it is necessary that great quantities of petroleum products be stored and transported in a container of a size suitable for the purpose. The standard 55-gallon drum was developed for this purpose, being made of a suitable metal, such as steel. The drum is cylindrical, having the top and bottom ends recessed a small amount, forming a chime at each end of the drum.

Because of the expense of the drums, it is more economical to rehabilitate the drums and reuse them than to discard them after one filling. The empty drums are returned to the refineries where they are stored in so called drum fields. The drum field comprises an open area adjacent the refinery wherein the drums are stored on their sides and in side by side relationship in parallel rows, awaiting later disposition. The drums are stored in this manner for several reasons, one of them being to avoid the hazard of fire.

When the drums are needed they are brought in from the drum field, cleaned and stripped of their paint. The stripped drum is then repainted, refilled with oil, and appropriately marked for shipment. The rehabilitated drum is substantially equivalent to the new drum.

The handling of the empty drums is time consuming and laborious. Recently, in an effort to make the handling of oil drums more efficient, fork trucks have been used extensively. These are electrically or gasoline operated units having a pair of vertical tracks in their front section and a fork-shaped member, horizontally disposed in the front of the truck, adapted to be raised or lowered on the vertical track. The fork truck is used extensively in factories where pallets carrying parts, etc. can be lifted on the fork attachment and rapidly transported from one location to another. The pallet is a horizontal substantially flat rectangular member supported on legs a few inches above the ground. The pallet is readily lifted by the fork truck since the fork is adapted to pass under the pallet. The fork attachment is not ideally suited to the movement of oil drums. For example, the drum tends to roll when the fork attachment is being pushed under the drum. And also, to carry more than one drum, the second drum must be placed on the fork attachment by hand.

2

This invention provides an attachment that can be attached to a fork truck, or any other lifting and moving means, such as a crane, which is particularly adapted to easily and rapidly transport oil drums.

The invention will be described with reference to the attached drawings in which;

Figure 1 is a side elevation of the drum lift, and in which;

Figure 2 is an end elevation of the drum lift, and in which;

Figure 3 is a plan view of the drum lift, and in which;

Figure 4 is a view showing the invention applied to a fork truck.

All the above views are highly diagrammatic in form, and are intended only to illustrate the invention.

Referring to the figures, the frame 10 is shown in its normal substantially horizontal position. Attached to the forward section of the frame is the fixed hook 11. The frame 10 may be adapted to carry several drums at once, in which case there will be a fixed hook 11 for each drum. The drum lift shown diagrammatically in the figures is equipped with three pairs of hooks and is adapted to lift three barrels or drums. The frame is equipped with three cross-members 12, 13, 14 which are adapted to form the frame and give strength to the unit. Attached to the bottom of at least one of the cross-members are suitable attaching brackets 15. The attaching brackets 15, shown more clearly in Figure 2, are adapted to permit ready attachment of the lift to the forks of a fork truck or other lifting device. At the rear of the frame is located the movable hook 16. The movable hook or hooks are attached to suitable lugs 17, 17 which are in turn attached to a horizontal shaft 18. The shaft or axle 18 is adapted to be oscillated by a centrally located crank 19. The crank may be so shaped that one of the movable hooks can be attached thereto, as indicated in the figures. The crank 19 is pivotally attached to a piston rod 20. The piston rod 20 is attached to a piston in the cylinder 21 and is adapted to be reciprocated by the application of hydraulic oil to the cylinder through the inlet and outlet apertures 22, 23. It is obvious that other methods of oscillating the shaft or axle 18 could be devised by one skilled in the art.

In operation the drum lift is placed over three drums located side by side in a straight line. The fixed hooks engage the front chime of the drums, and the movable hooks are then oscillated to en-

gage the rear chime of the drums. The drum lift is then raised by the unit to which it is attached, lifting the three barrels, and the lift is moved to the desired new location for the drums. The drum lift is rapidly released from the barrels or drums by oscillating the movable hook away from the drum, and raising the lift. The movable or fixed hooks can be designed to give slightly in a lateral direction to accommodate barrels of slightly varying lengths. For example, as shown, the movable hooks may be a suitable cantilever spring adapted to bend about its point of attachment to the lug.

Although the invention has been described with particular reference to the handling of petroleum drums, it is obvious that it may be applied to the handling of any container of a similar shape having chimes located at its ends. For example, it may be applied to the beer industry or the paint industry.

The invention is shown in Figure 4 attached to a fork truck of conventional design well known in the art. These fork trucks are equipped with hydraulic systems making the attachment of the drum lift thereto readily adaptable. The forks **24** are attached to the lift by means of the attaching brackets **15**. A drum **25** is shown in lifting position attached to the drum lift.

What is claimed is:

1. A device adapted to engage several barrels positioned on their sides comprising a portable frame, a plurality of fixed hooks depending from one end of said frame, a substantially horizontal axle located at the other end of said frame and pivotally attached to said frame, for each of said plurality of fixed hooks a lug attached to said axle arranged in paired relationship with said fixed hooks, cantilever spring hooks attached to each of said lugs, each pair of fixed and spring hooks being adapted to engage the chimes of a barrel located therebetween, said spring hooks being adapted to bend in a lateral direction in order to accommodate barrels of different length, and means for oscillating said axle to place the spring hooks into and out of contact with the chimes of said barrels.

2. A device adapted to engage several barrels positioned on their sides comprising a portable frame, a multiplicity of fixed hooks depending from one end of said frame, a substantially horizontal axle located at the other end of said frame and pivotally attached to said frame, for each of said fixed hooks a lug attached to said axle, cantilever spring hooks attached to each of said lugs, said fixed and spring hooks being arranged in pairs with each pair of fixed and spring hooks

being adapted to engage the chimes of a barrel located therebetween, said spring hooks being adapted to move in a lateral direction in order to accommodate barrels of different length, means for oscillating said axle to place the spring hooks into and out of contact with the chimes of said barrels, and attaching brackets depending from said frame between adjacent pairs of hooks adapted to aid in connecting said frame to a transporting device.

3. A device adapted to engage several barrels positioned on their sides comprising a portable frame, a multiplicity of fixed hooks depending from one end of said frame, a substantially horizontal axle located at the other end of said frame and pivotally attached to said frame, lugs equal in number to the fixed hooks attached to said axle, cantilever spring hooks attached to said lugs, said fixed and spring hooks being arranged opposite each other in two substantially parallel rows, each pair of fixed and spring hooks being adapted to engage the chimes of a barrel located therebetween, said spring hooks being adapted to move in a lateral direction in order to accommodate barrels of varying length, a crank attached to said axle, a piston rod pivotally attached to said crank, a piston attached to said piston rod and a cylinder in which said piston is adapted to reciprocate, means for reciprocating said piston in said cylinder to bring said spring hooks into and out of engagement with the chimes of said barrels, and attaching brackets depending from said frame between adjacent pairs of hooks adapted to aid in connecting said frame to a transporting device.

WESLEY J. DODGE.

References Cited in the file of this patent

UNITED STATES PATENTS

Number	Name	Date
1,490,235	Smith et al.	Apr. 15, 1924
1,518,560	Carroll	Dec. 9, 1924
1,835,431	Ryerson	Dec. 8, 1931
1,900,569	Lederer	Mar. 7, 1933
2,068,825	Stevenson	Jan. 26, 1937
2,399,360	Lacey	Apr. 30, 1946
2,497,118	Ferrario et al.	Feb. 14, 1950
2,512,409	Adde	June 20, 1950
2,517,085	Cirillo	Aug. 1, 1950
2,519,067	Rich	Aug. 15, 1950
2,576,048	Schum	Nov. 20, 1951

FOREIGN PATENTS

Number	Country	Date
39,281	Norway	July 7, 1924
383,706	Great Britain	Nov. 24, 1932
782,403	France	Mar. 18, 1935