Office de la Propriété Intellectuelle du Canada
Un organisme d'Industrie Canada

Canadian Intellectual Property Office
An agency of Industry Canada

CA 2118107 C 2005/08/16

(11)(21) 2 118 107

(12) BREVET CANADIEN
CANADIAN PATENT

(13) C

(22) Date de dépôt/Filing Date: 1994/10/13

(41) Mise à la disp. pub./Open to Public Insp.: 1995/04/19

(45) Date de délivrance/Issue Date: 2005/08/16

(30) Priorité/Priority: 1993/10/18 (93 116780.3) EP

(51) Cl.Int.^{5}/Int.Cl.^{5} B66B 5/16

(72) Inventeur/Inventor:
NAGEL, HEINZ-DIETER, DE

(73) Propriétaire/Owner:
INVENTIO AG, CH

(74) Agent: RICHES, MCKENZIE & HERBERT LLP

(54) Titre : MATERIEL DE SECURITE POUR CAGE D'ASCENSEUR
(54) Title: SAFETY EQUIPMENT FOR A LIFT CAGE

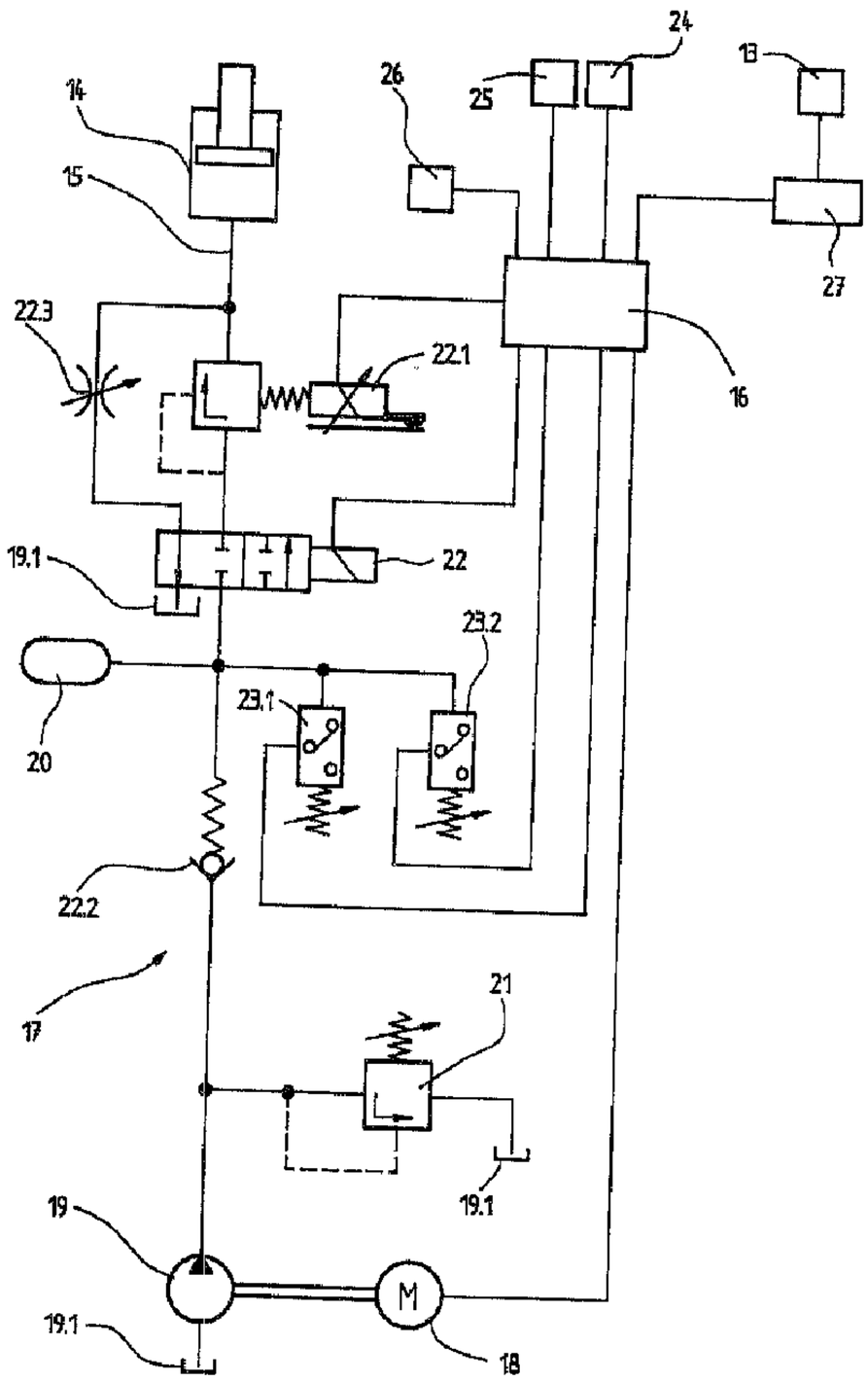

(57) Abrégé/Abstract:
In this safety equipment, a fastening housing (6) arranged at the carrier frame of a lift cage displays recesses, into which guides of a braking equipment (9) engage, whereby the braking equipment (9) is borne to be displaceable in the fastening housing (6). The fastening housing (6) is arranged in such a manner at the carrier frame that the braking equipment (9) embraces a free limb (2.2)

CA 2118107 C 2005/08/16

(11)(21) 2 118 107

(13) C

(57) Abrégé(suite)/Abstract(continued):
with running surfaces 2.3, of a guide rail. The braking equipment (9) displays a respective brake plate (12), which is carried by a brake plate holder (12.1), with a brake sensor (13) for each running surface (2.3). The brake sensor (13) embedded in the brake plate (12) serves for the monitoring of the brake plate (12). At least one brake plate (12) is actuated in the case of braking by a brake cylinder (14), which is arranged at the braking equipment (9) and stands in connection with a pressure medium equipment by means of a pressure medium duct.

ABSTRACT:
SUMMARY:

In this safety equipment, a fastening housing (6) arranged at the carrier frame of a lift cage displays recesses, into which guides of a braking equipment (9) engage, whereby the braking equipment (9) is borne to be displaceable in the fastening housing (6). The fastening housing (6) is arranged in such a manner at the carrier frame that the braking equipment (9) embraces a free limb (2.2) with running surfaces 2.3, of a guide rail. The braking equipment (9) displays a respective brake plate (12), which is carried by a brake plate holder (12.1), with a brake sensor (13) for each running surface (2.3). The brake sensor (13) embedded in the brake plate (12) serves for the monitoring of the brake plate (12). At least one brake plate (12) is actuated in the case of braking by a brake cylinder (14), which is arranged at the braking equipment (9) and stands in connection with a pressure medium equipment by means of a pressure medium duct.

(Figure 7)

DESCRIPTION:

Safety equipment for a lift cage

The invention concerns a safety equipment for a lift cage with a braking equipment engaging at a guide rail, wherein the braking force exerted by the braking equipment on the guide rail is regulated by a regulating equipment.

A braking equipment with two scissors-like frame members for a lift cage, at which a wedge-shaped friction member and a brake block are arranged at one end and a compression spring and an electromagnet are arranged at the other end, is known from the specification DE-A1 3 934 492. In case of emergency, the wedge-shaped friction member is moved upwardly by a lifting equipment so that a friction force initiated by the brake block at a guide rail slows down and stops the downwardly moving lift cage. The slowing-down of the lift cage is measured by means of an acceleration-measuring sensor. A feedback regulator feeding the electromagnet is so controlled on the basis of the data supplied by this measuring sensor that the friction force between the guide rail and the brake block keeps the slowing-down of the lift cage constant.

A disadvantage of the known equipment lies in the great space requirement of the scissors-like braking equipment, which in turn makes the arrangement of the guide equipments of the lift cage more difficult. A further disadvantage lies in the triggering equipment, which is formed by the lever equipment and the wedge-shaped friction member and which in particular at the beginning of the slowing-down causes uncontrollable peak retardations.

Here, the invention is to create a remedy. The invention, as characterised in the claims, solves the problem of avoiding the disadvantages of the known equipments and of creating a safety equipment, by which the retardation of the lift cage during the entire braking operation is maintainable at a constant value independently of the direction of travel.

The advantages achieved by the invention are to be seen substantially in that the lift user is not exposed to unnecessary retardation forces during an emergency braking, which signifies travel comfort and safety even in the case of an emergency braking, in particular for disabled lift users. A further advantage is to be seen in that the lift cage can be fixed by means of the safety equipment for maintenance operations at a desired place or for loading and unloading.

Accordingly, in one aspect, the present invention provides safety equipment for a lift cage with a braking equipment engaging at a guide rail, wherein the braking force exerted by the braking equipment on the guide rail is regulated by a regulating equipment, characterised thereby, that the braking equipment embraces a free limb, which is provided with running surfaces, of the guide rail, wherein a respective brake plate carried by a brake plate holder is provided for each running surface and that at least one brake plate is actuable by means of a brake cylinder, wherein the brake cylinder is loadable by means of a pressure which is produced in a pressure medium by means of a pressure medium equipment and regulated by means of the regulating equipment.

The invention is explained more closely in the following by reference to drawings illustrating merely one manner of execution. There show:

Figure 1 — a schematic elevation of a lift cage movable in a lift shaft with parts of a safety equipment according to the invention, which are arranged at an upper yoke,

Figure 2 — a schematic plan view of the lift installation according to Figure 1,

Figure 3 — a schematic elevation of the lift cage movable in the lift shaft with parts of the safety equipment according to the invention, which are arranged at a lower yoke,

Figure 4 — a schematic plan view of the lift installation according to Figure 3,

Figure 5 — a schematic elevation of a braking equipment, which is arranged in a fastening housing, of the safety equipment according to the invention,

Figure 6 — a schematic plan view of the equipment according to Figure 5,

Figure 7 — a schematic elevation of details of the braking equipment according to Figures 5 and 6,

Figure 8 a schematic plan view of the equipment according to Figure 7,

Figure 9 a variant of embodiment of the details of the braking equipment according to Figures 7 and 8,

Figure 10 a schematic plan view of the equipment according to Figure 9,

Figure 11 a schematic illustration of a pressure medium equipment co-operating with a regulating equipment and

Figure 12 a variant of embodiment of the pressure medium equipment co-operating with a regulating equipment.

A lift shaft, in which a lift cage 3 is movable along guide rails 2, is denoted by 1 in the Figures 1 to 12. The lift cage 3 stands in a carrier frame 4, which consists of an upper yoke 4.1, a lower yoke 4.2, side plates 4.3 and of metal stiffening plates 4.4 arranged at the corners. According to variant of embodiment, at least one fastening housing 6 of a safety equipment is connected with the upper yoke 4.1 and/or the lower yoke 4.2 at fastening points 5. Recesses 7, into which the guides 8 of a braking equipment 9 belonging to the safety equipment engage, are arranged at the fastening housing 6. Elastic intermediate layers 10 are arranged between the recesses 7 and the guides 8, whereby the braking equipment 9 is borne to be so displaceable in the fastening housing 6 that it is capable during the braking operation of following deviations from verticality and tolerances of the guide rail 2 as desired. Thereby, additional forces acting on the guide rail 2, the carrier frame 4 and on the lift shaft 1 are avoided. The fastening housing 6 is arranged at the carrier frame 4 in such a manner that fastening bores 11 arranged at the fastening housing 6 come to lie onto the fastening points 5 and the braking equipment 9 embraces a free limb 2.2, which is provided with running surfaces 2.3, of the guide rail 2. The braking equipment 9 displays a respective brake plate 12 with a brake sensor 13 for each running surface 2.3. The brake sensor 13 embedded into the brake plate 12 serves for the monitoring of the brake plate 12. The signal of the brake sensor 13, for example a temperature-dependent resistor, is continuously evaluated by a lift control 27. The lift cage is stopped on appropriate change of the signal, for example due to excess temperature or wear of the brake plate 12. At least one brake plate 12 carried by a brake plate holder 12.1 is actuated in the case of braking by a brake cylinder 14, which is arranged at the braking equipment 9, with a cylinder chamber 14.1, a piston 14.2 and with a pressure medium seal 14.3, which stands in connection with a pressure medium equipment 17 belonging to the safety equipment by means of a pressure medium duct 15.

A further variant of embodiment of the braking cylinder 14, which consists of a cylinder chamber 14.1, piston 14.2, pressure medium seal 14.3, compression spring 14.4 and piston seal 14.5 and in which the braking force is produced by means of the compression spring 14.4, is illustrated in the Figures 9 and 10. The regulation of the braking force acting on the brake plate 12 takes place by loading the pressure medium equipment 17 by means of pressure medium in opposite direction of the brake cylinder 14.

The pressure medium equipment 17 belonging to the safety equipment comprises a pressure pump 19, which is driven by a motor 18 and conveys pressure medium out of a tank 19.1 by way of a non-return valve 22.2 to a pressure storage device 20 until the maximum storage device pressure set at a second pressure switch 23.2 is reached. In case the storage device pressure falls below a minimum value settable at a first pressure switch 23.1, the pressure storage device 20 is charged again to the maximum storage device pressure. The storage device pressure is greater than the braking pressure required for the case of braking. In the case of excess pressure, a pressure-limiting valve 21 short-circuits the pump 19 with the tank 19.1. In the case of braking, a 3/2-way valve 22 and a pressure-regulating valve 22.1 charge the brake cylinder 14 with the pressure medium conducted by way of the pressure medium duct 15. After the case of braking, the 3/2-way valve 22 and the pressure-regulating valve 22.1 again return into their initial state so that the pressure medium in the brake cylinder 14 can be relieved to the tank 19.1 by way of a settable throttle valve 22.3. The motor 18, the first pressure switch 23.1, the second pressure switch 23.2, the 3/2-way valve 22 and the pressure-regulating valve 22.1 stand in connection electrically with a regulating equipment 16 belonging to the safety equipment.

For the establishment and maintenance of the operational readiness of the pressure medium equipment 17, the regulating equipment 16 standing in connection with the lift control 27 switches the motor 18 on and off on the basis of the signals of the first pressure switch 23.1 and the second pressure switch 23.2. When the storage device pressure in the pressure storage device 20 falls below a minimum pressure settable at the first pressure switch 23.1, the regulating equipment 16 by reason of the pressure switch signal switches the motor 18 on, which remains switched on until the maximum pressure settable at the second pressure switch 23.2 is reached.

In the case of a fault in downward direction of travel, the regulating equipment 16 switches the 3/2-way valve 22 on by reason of the signals of an acceleration sensor 25 or a speed sensor 24 of a speed limiter or both an acceleration sensor 25 and a speed sensor 24 of a speed limiter. The pressure medium standing under pressure in the pressure storage device 20 thus flows by means of the pressure medium duct 15 to the cylinder chamber 14.1 and causes the brake plate 12 to be urged against the running surface 2.3 of the guide rail 2. At the same time, a retardation sensor 26 arranged at the fastening housing 6 measures the retardation of the lift cage 3. The regulating equipment 16 changes the setting of the pressure-regulating valve 22.1 on the basis of the signal of the retardation sensor 26. In the case of retardation values below the ordinary gravitational acceleration, the regulating equipment 16 changes the setting of the, pressure-regulating valve 22.1 in such a manner that the braking force of the brake cylinder 14 is increased until a retardation value corresponding to the ordinary gravitational acceleration is reached. When retardation values, which are greater than the ordinary gravitational acceleration, result due to different conditions of friction on the running surfaces 2.3 of the guide rail 2, the regulating equipment 16 reduces the braking force of the brake cylinder 14 by means of the pressure-regulating valve 22.1 until retardation value corresponding to the ordinary gravitational acceleration are reached. The retardation of the lift cage 3 remains constant and follows a predetermined value during the entire braking operation„ The regulating equipment 1.6 compares the predetermined value, for example ordinary gravitational acceleration, with the value measured at the lift cage 3 by means of the retardation sensor 26 and balances out differences between both the values by greater or lesser loading of the brake cylinder 14 by means of the pressure-regulating valve 22.1. As soon as the lift cage has come to standstill, the regulating equipment 16 changes the setting of the pressure-regulating valve 22.1 in such a manner that the braking force of the brake cylinder 14 reaches its maximum value. The lift cage 3 is thereby blocked in the lift shaft 1.

In the case of a fault in upward direction of travel, the braking operation takes place in substantially the same way as for the case of a fault in downward travel direction. By reason of the opposite direction of movement ascertained by the speed sensor 24, the regulating equipment 16 fixes retardation values which lie below the ordinary gravitational acceleration and influences the braking force of the brake cylinder 14 accordingly.

For the loading or unloading of the lift cage 3 at a certain storey of for the maintenance of the lift cage 3 at a desired place in the lift shaft 3, the safety equipment according to the invention is activated manually. During the loading and unloading, the activated safety equipment prevents the springing-in or the springing-out of the lift cage 3. During maintenance operations, the safety equipment is used for the location of the lift cage 3 at any desired place in the shaft. The activation of the safety equipment takes place by means of the lift control 27, which in its turn is brought into the respective operational state by means of not illustrated manual switches. The regulating equipment 16 in that case switches the 3/2-way valve 22 on and sets the pressure-regulating valve 22.1 to maximum value so that the lift cage 3 is held fast at the guide rails 2 with maximum braking force of the brake cylinder 14. To free the lift cage 3, the 3/2-way valve 22 and the pressure-regulating valve 22.1 are switched off, by which the pressure medium in the brake cylinder 14 can be relieved to the tank 19.1 by way of the throttle valve 22.3. The speed of decay of the braking force is settable at the throttle valve 22.3.

A further variant of embodiment of the pressure medium equipment 17, which takes into consideration the variant of embodiment of the braking cylinder 14 illustrated in the Figures 9 and 10, is illustrated in Figure 12. In the pressure-free state, the compression spring 14.4 urges the brake plates 12 against the running surfaces 2.3 of the guide rail 2. Thereby, the lift cage 3 is firmly set against the guide rails 2 with maximum braking force. For the establishment and the maintenance of the operational readiness of the pressure medium equipment 17, the regulating equipment 16 standing in connection with the lift control 27 switches the motor 18 on and off on the basis of the signals of the first pressure switch 23.1 and the second pressure switch 23.2. When the storage device pressure in the pressure storage device 20 falls below a minimum pressure settable at the first pressure switch 23.1, the regulating equipment 16 by reason of the pressure switch signals switches the motor 18 on, which

remains switched on until the maximum pressure settable at the second pressure switch 23.2 is reached. The storage device pressure is greater than the braking pressure required for the case of braking. Now, the regulating equipment 16 switches a 2/2-way valve 22.4 on and pressure medium flows into the cylinder chamber 14.1, whereby the compression spring 14.4 is compressed. On reaching the maximum braking pressure settable at the fourth pressure switch 23.4, the regulating equipment 16 closes the 2/2-way valve 22.4, during which the pressure-regulating valve 22.1 is so set that no pressure medium can flow away to the tank 19.1. In this operational state of the pressure medium equipment 17, the brake plates are raised off from the running surfaces 2.3 of the guide rail 2. In case the braking pressure falls below a minimum braking pressure settable at a third pressure switch 23.3, the 2/2-way valve 22.4 is switched on until the braking pressure has again reached the maximum value.

In the case of a fault in downward direction of travel, the regulating equipment 16 sets the pressure-regulating valve 22.1 in such a manner on the basis of the signals of an acceleration sensor 25 or a speed sensor 24 that the pressure in the cylinder chamber 14.1 is reduced until the compression spring 14.4 urges the brake plates 12 against the running surfaces 2.3 and a braking effect is achieved. At the same time, a retardation sensor 26 arranged at the fastening housing 6 measures the retardation of the lift cage 3. The regulating equipment 16 changes the setting of the pressure-regulating valve 22.1 on the basis of the signal of the retardation sensor 26. In the case of retardation values below the ordinary gravitational acceleration, the regulating equipment 16 changes the setting of the pressure-regulating valve 22.1 in such a manner that the the braking force of the brake cylinder 14 is reduced until a retardation value corresponding to the ordinary gravitational acceleration is reached. If retardation values, which are greater than the ordinary gravitational acceleration, result due to different conditions of friction on the running surfaces 2.3 of the guide rail 2, the regulating equipment 16 correct the braking force of the brake cylinder 14 by appropriate setting of the pressure-regulating valve 22.1 and by switching the 2/2-way valve 22.4 on until retardation values corresponding with the ordinary gravitational acceleration are reached. The retardation of the lift cage 3 remains

constant and follows a predetermined value during the entire braking operation. The regulating equipment 16 compares the predetermined value, for example ordinary gravitational acceleration, with the value measured at the lift cage 3 by means of the retardation sensor 26 and balances out differences between both the values by greater or lesser loading of the brake cylinder 14 by means of the 2/2-way valve 22.4 and the pressure-regulating valve 22.1. As soon as the lift cage has come to standstill, the regulating equipment 16 closes the 2/2-way valve 22.4 and changes the setting of the pressure-regulating valve 22.1 in such a manner that the compression spring 14.4 urges the brake plates 12 with maximum spring force against the running surfaces 2.3 of the guide rail 2. The lift cage 3 is thereby blocked in the lift shaft 1.

In the case of a fault in upward direction of travel, the braking operation takes place in substantially the same manner as for the case of a fault in downward direction of travel. By reason of the opposite direction of movement ascertained by the speed sensor 24, the regulating equipment 16 fixes retardation values which lie below the ordinary gravitational acceleration and influences the braking force of the brake cylinder 14 accordingly.

For the loading or unloading of the lift cage 3 at a certain storey or for maintenance of the lift cage 3 at a desired place in the lift shaft 1, the safety equipment according to the invention is activated manually. During loading and unloading, the activated safety equipment prevents the springing-in or the springing-out of the lift cage 3. In the case of maintenance operations, the safety equipment is used for locating the lift cage 3 at a desired place in the shaft. The activation of the safety equipment takes place by means of the lift control 27, which in its turn is brought into the respective operational states by means of not illustrated manual switches. The regulating equipment 16 changes the setting of the pressure-regulating valve 22.1 in such a manner that the compression spring 14.4 urges the brake plates 12 with maximum spring force against the running surfaces 2.3 of the guide rail 2 so that the lift cage 3 is held fast at the guide rails 2. To free the lift cage 3, the regulating equipment 16 switches the 2/2-way valve 22.4 on, whilst the pressure-regulating valve 22.1 is so set that no pressure medium can flow away to the tank 19.1. In this operational state of the pressure medium equipment 17, the brake plates 12 are raised off from the running surfaces 2.3 of the guide rail 2 and the lift cage is again freely movable.

The embodiments of the invention in which an exclusive property or privilege is claimed are defined as follows:

1. Safety equipment for a lift cage (3) with a braking equipment (9) engaging at a guide rail (2), wherein the braking force exerted by the braking equipment (9) on the guide rail is regulated by a regulating equipment (16), characterised thereby, that the braking equipment embraces a free limb (2.2), which is provided with running surfaces (2.3), of the guide rail (2), wherein a respective brake plate (12) carried by a brake plate holder (12.1) is provided for each running surface (2.3) and that at least one brake plate (12) is actuable by means of a brake cylinder (14), wherein the brake cylinder (14) is loadable by means of a pressure which is produced in a pressure medium by means of a pressure medium equipment (17) and regulated by means of the regulating equipment (16).

2. Safety equipment according to claim 1, cheracterised thereby, that the braking equipment (9) is guided by a fastening housing (6) arranged at a carrier frame (4), wherein the fastening housing (6) displays recesses (7), into which guides (8) of the braking equipment (9) engage.

3. Safety equipment according to claim 2, characterised thereby, that elastic intermediate layers (10), at which the guides (8) of the braking equipment (9) are so retained and guided that the braking equipment (9) is capable of following deviations from verticality and tolerances of the guide rail (2) during the braking operation, are arranged at the recesses (7).

4. Safety equipment according to claim 2 or 3, characterised thereby, that the fastening housing (6) is arranged at a first yoke (4.1) of the carrier frame (4).

5. Safety equipment according to claim 2 or 3, characterised thereby, that the fastening housing (6) is arranged at a second yoke (4.2) of the carrier frame (4), said second yoke (4.2) located below the first yoke (4.1).

6. Safety equipment according to claim 1, characterised thereby that a retardation sensor (26) is provided, which is arranged at the fastening housing (6) and which in interaction with the regulating equipment (16) keeps the retardation of the lift cage (3) at a predetermined value during the braking operation.

7. Safety equipment according to claim 6, characterised thereby, that the regulating equipment (16) is activatable by means of a speed sensor (24) and an acceleration sensor (25) in the case of a fault.

8. Safety equipment according to claim 6, characterised thereby, that the regulating equipment (16) is activatable by means of a lift control (27) during the loading and unloading of the lift cage (3) and during maintenance operations, wherein the lift control (27) is manually settable into the respective operating state.

9. Safety equipment according to claim 1, characterised thereby, that the pressure medium equipment (17), which stands in connection with the regulating equipment (16), comprises a motor (18), a pressure pump (19), a pressure storage device (20), pressure switches (23.1, 23.2, 23.3, 23.4), valves (21, 22, 22.1, 22.2, 22.3, 22.4) and pressure medium ducts (15), wherein a pressure-regulating valve (22.1) controls the pressure medium led to the brake cylinder (14).

10. Safety equipment according to claim 1, characterised thereby, that the brake plate (12) displays a brake sensor (13) for monitoring the wear of the brake plate (12).

11. Safety equipment according to claim 1, characterised thereby, that the brake cylinder (14) displays a piston (14.2), which is arranged in a cylinder chamber (14.1) and acts on the brake plate holder (12.1), for the production of the braking force.

12. Safety equipment according to claim 11, characterised thereby, that the brake cylinder (14) displays a compression spring (14.4) for the production of the braking force, wherein the loading of the brake cylinder (14) takes place against the compression spring (14.4).

13. Safety equipment according to claim 6, characterised thereby, that the regulating equipment (16) is activatable by means of a speed sensor (24) or an acceleration sensor (25) in the case of a fault.

Fig. 1

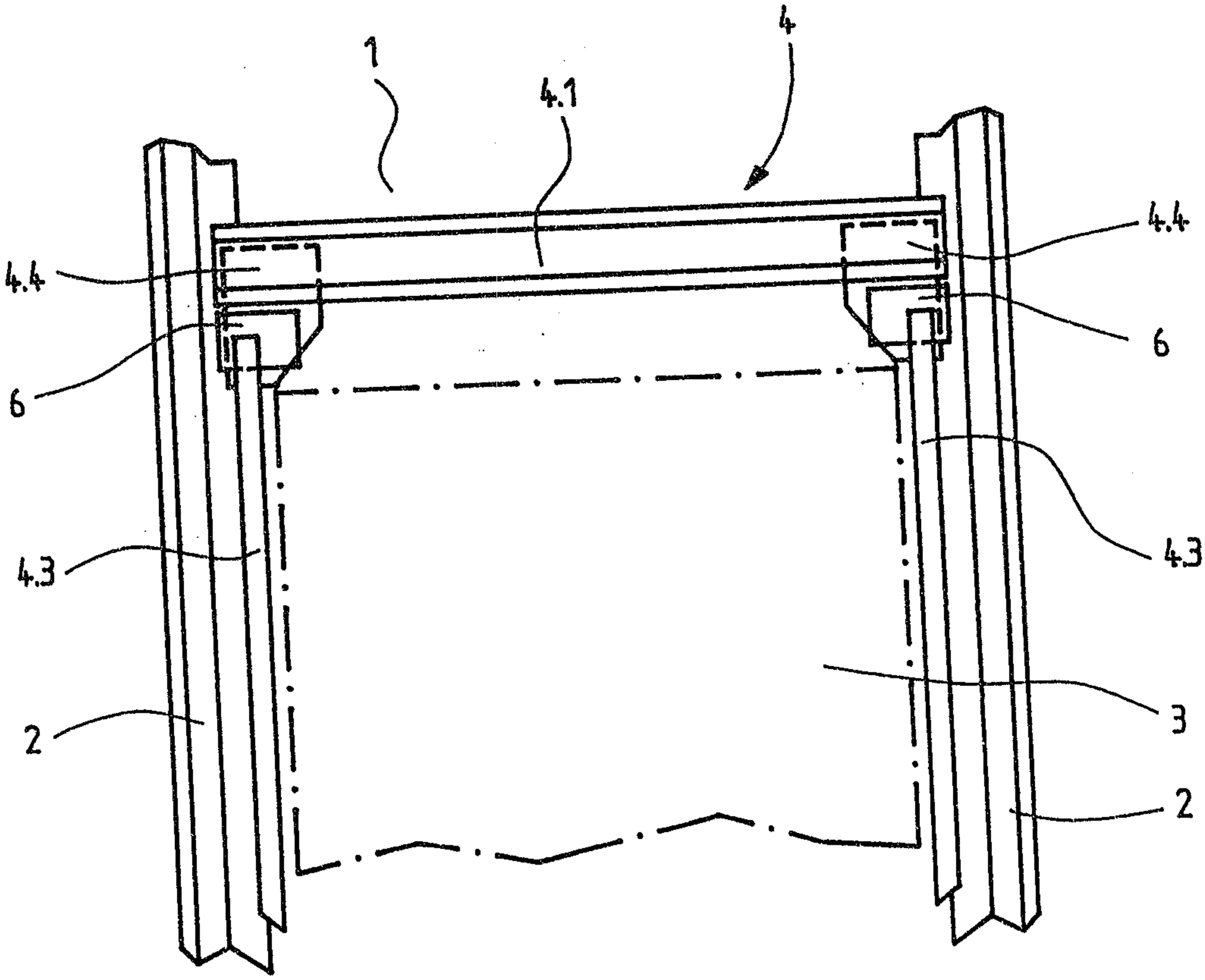

Fig. 2

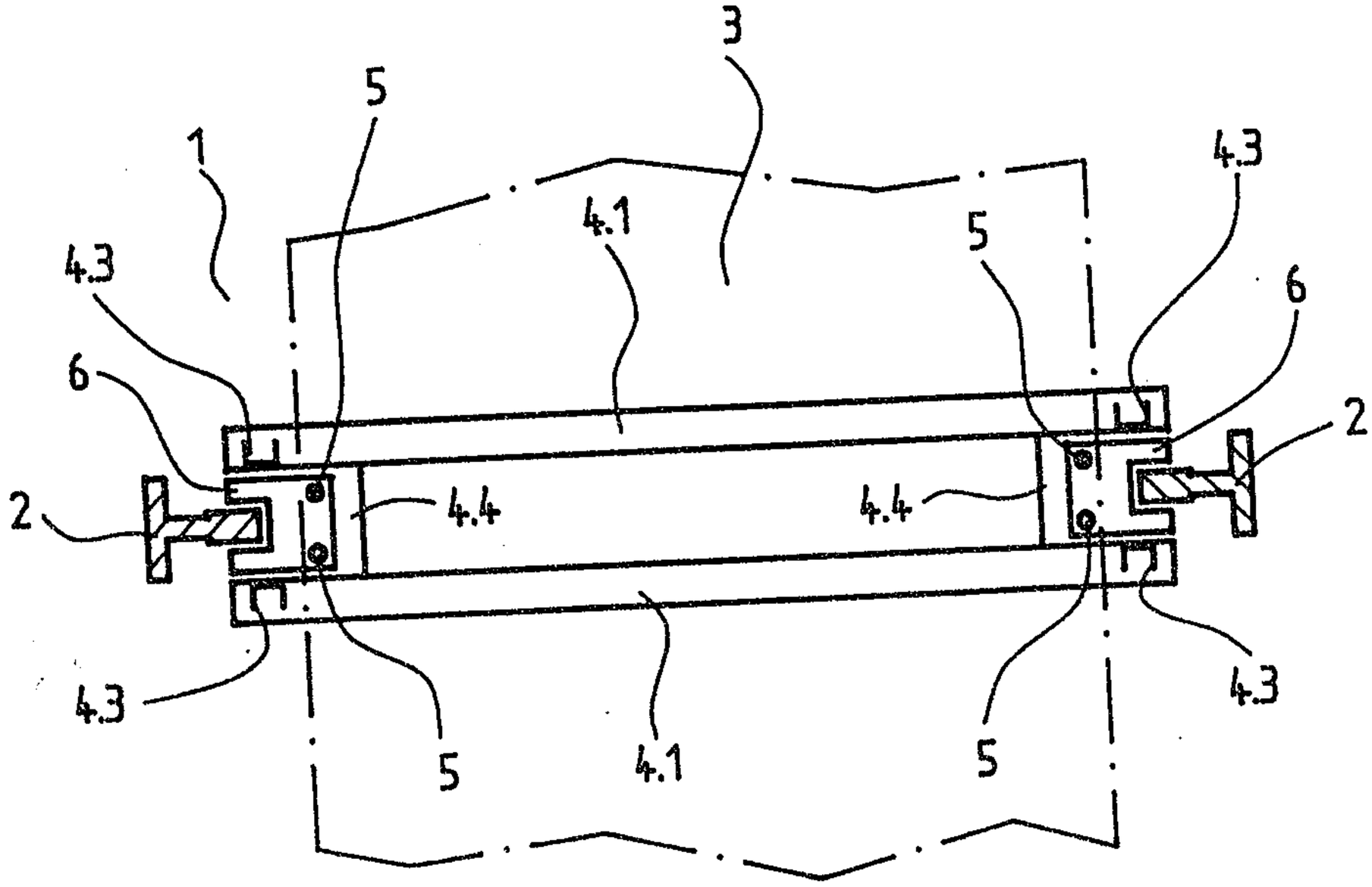

Fig. 3

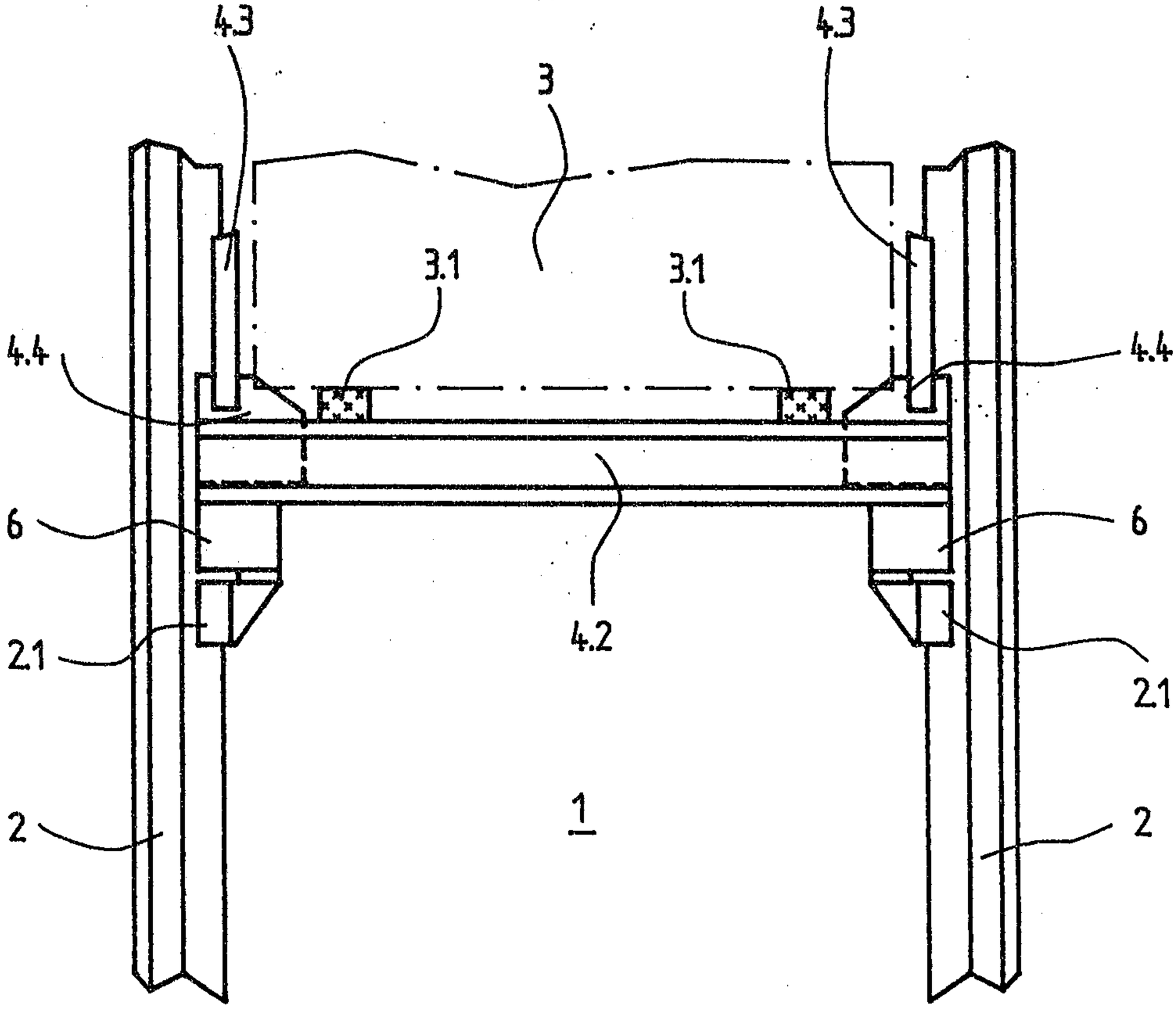
4.3
3
4.3
3.1
3.1
4.4
4.4
6
6
21
4.2
21
1
2
2

Fig. 4

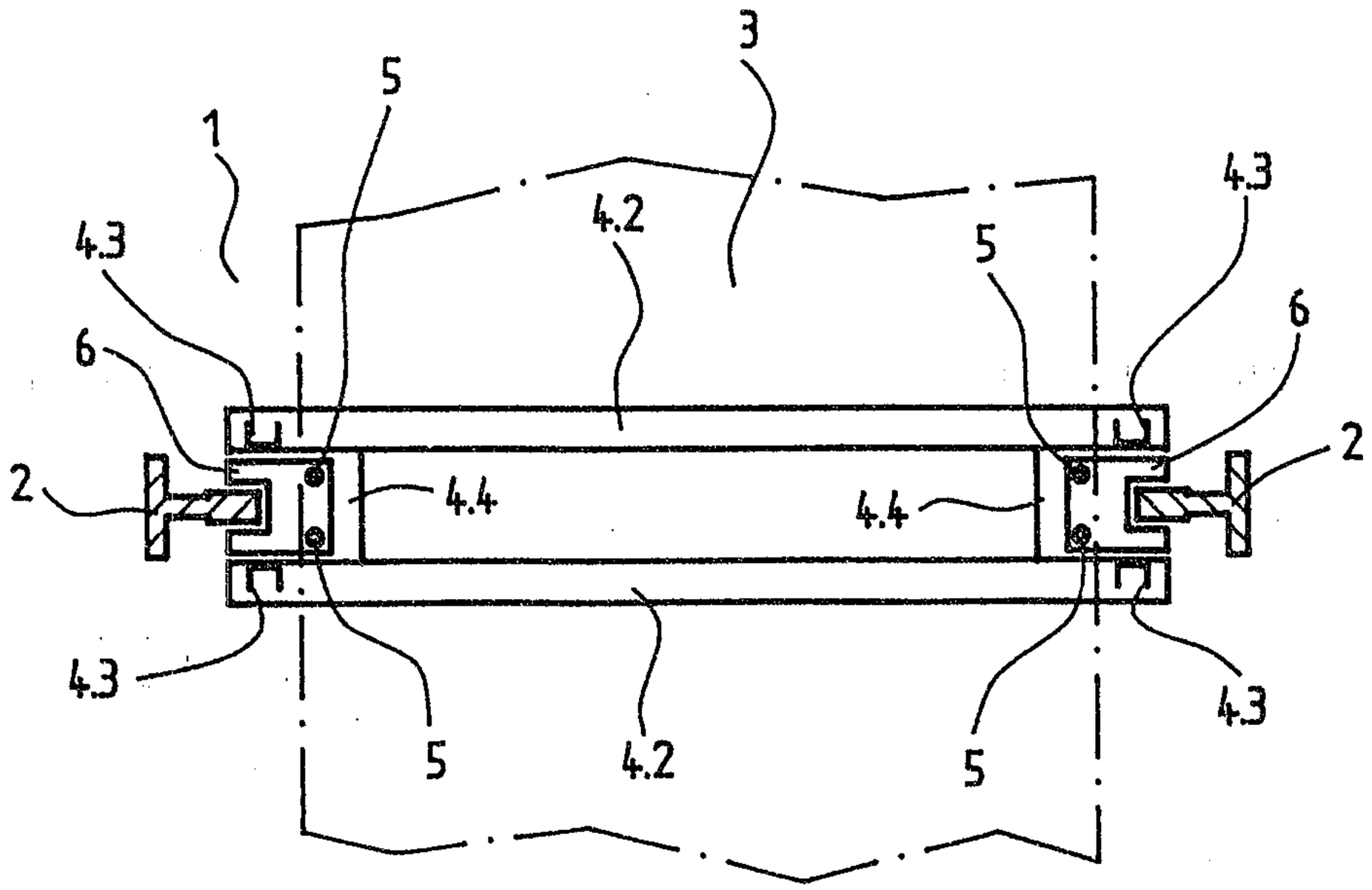
3
5
1
4.3
4.2
5
4.3
6
6
2
2
4.4
4.4
4.3
5
4.2
5
4.3

Fig. 5

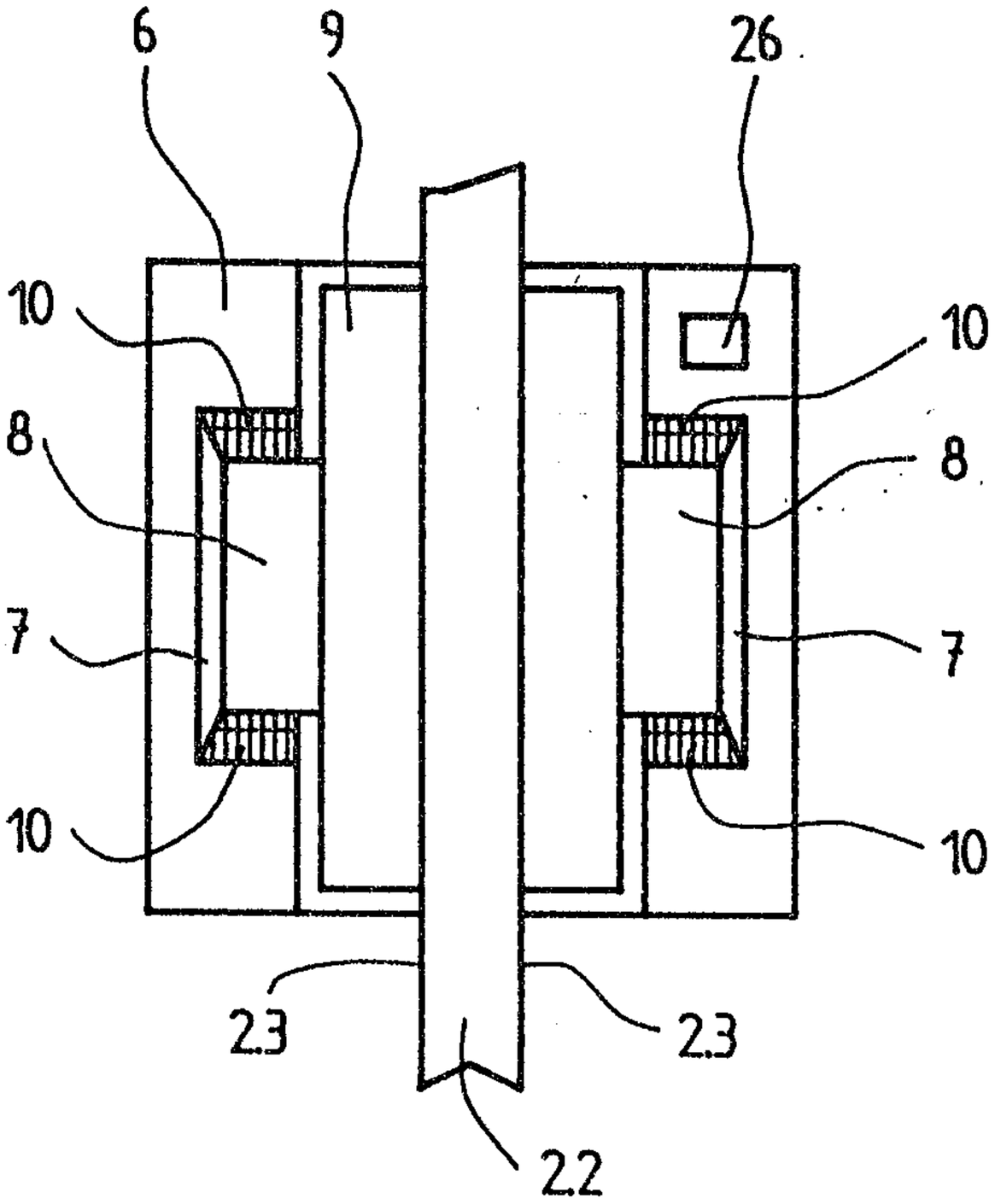

Fig. 6

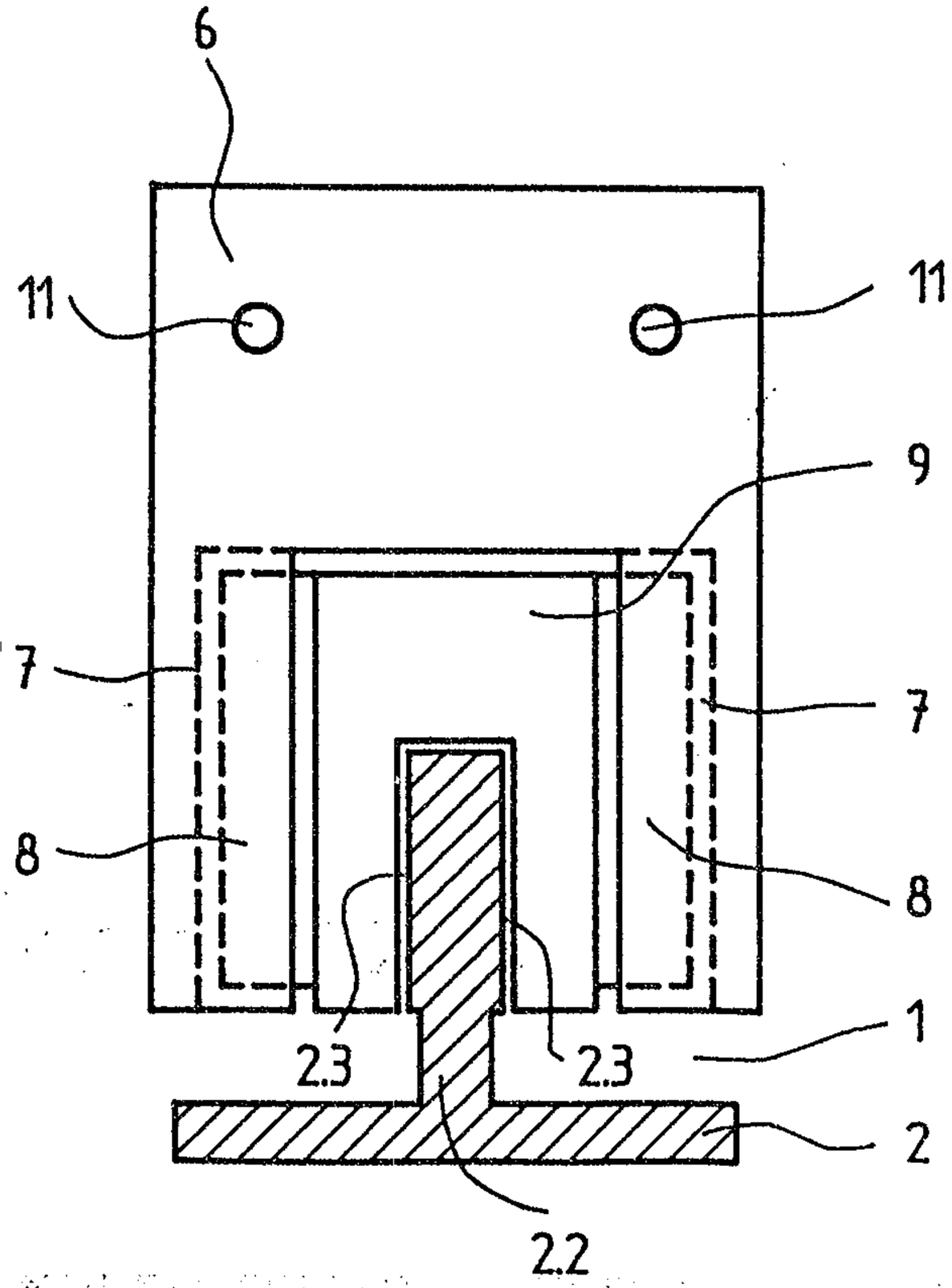

Fig. 7

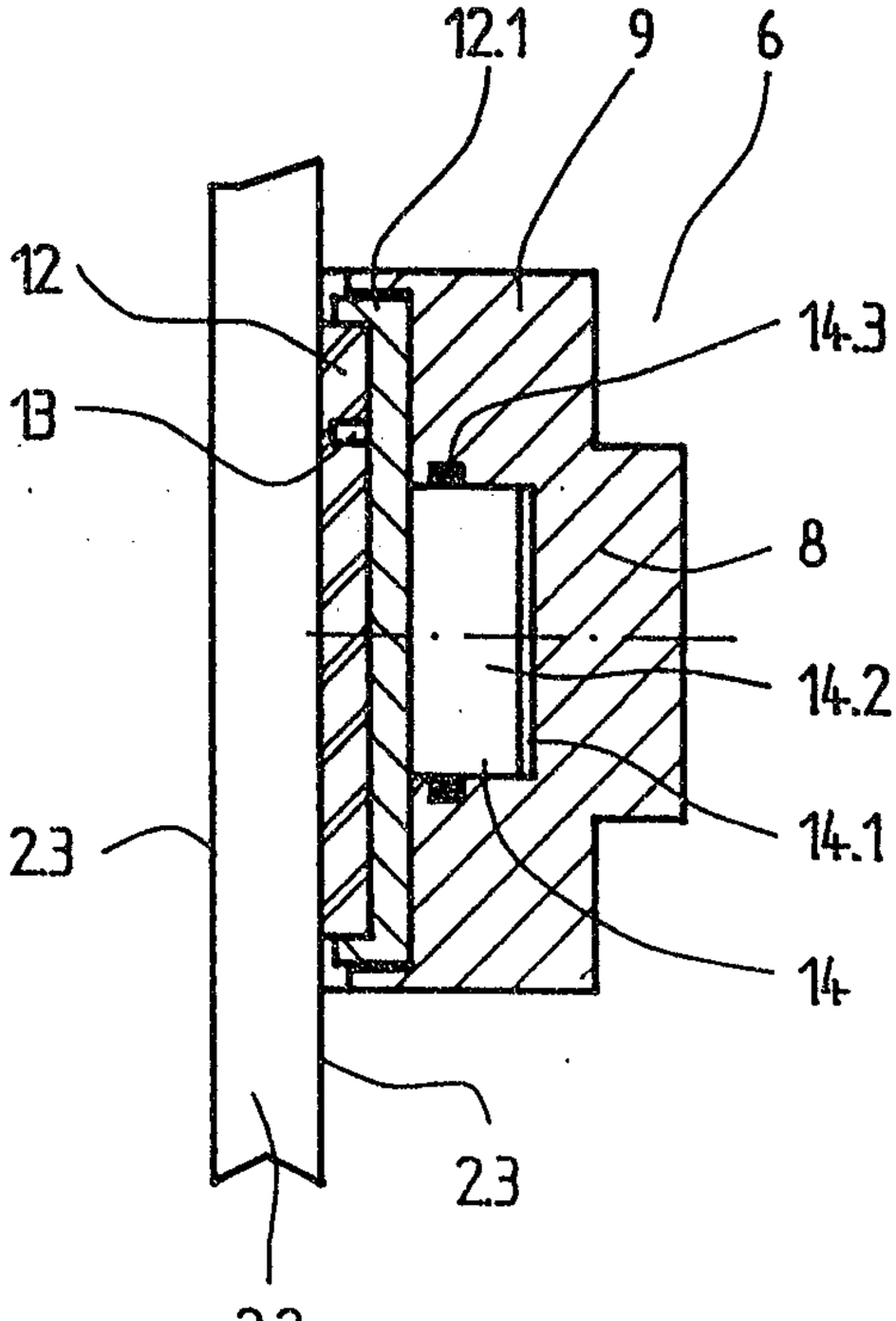

Fig. 8

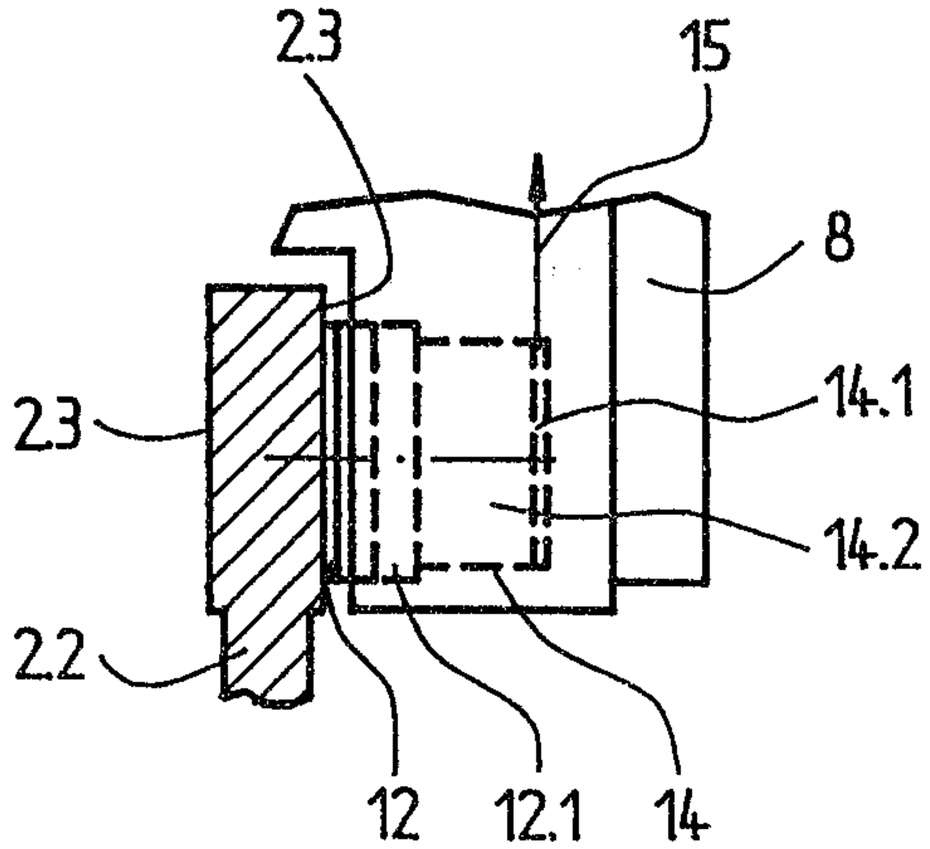

Fig. 9

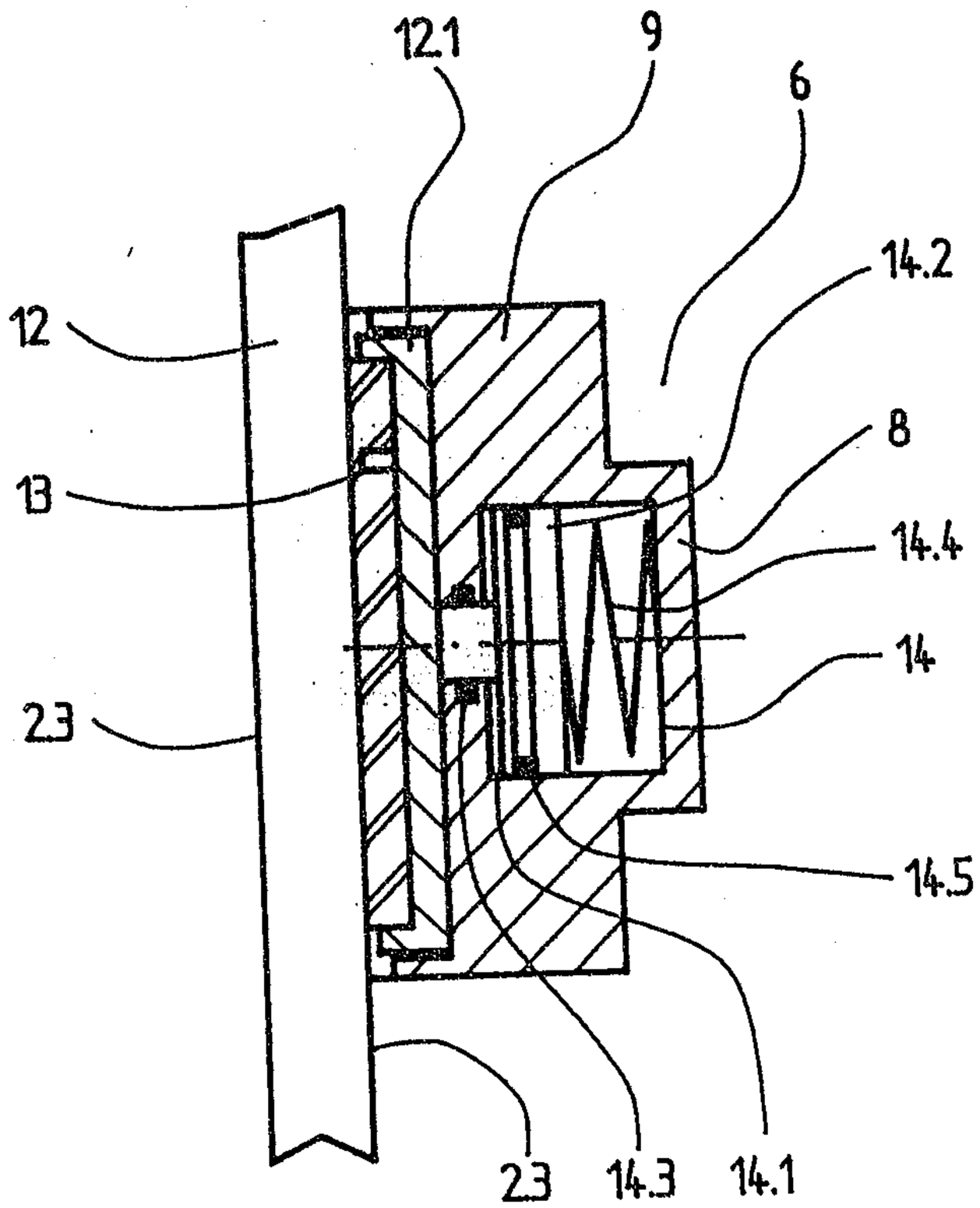
12.1
9
6
14.2
12
8
13
14.4
14
23
14.5
23
14.3
14.1

Fig. 10

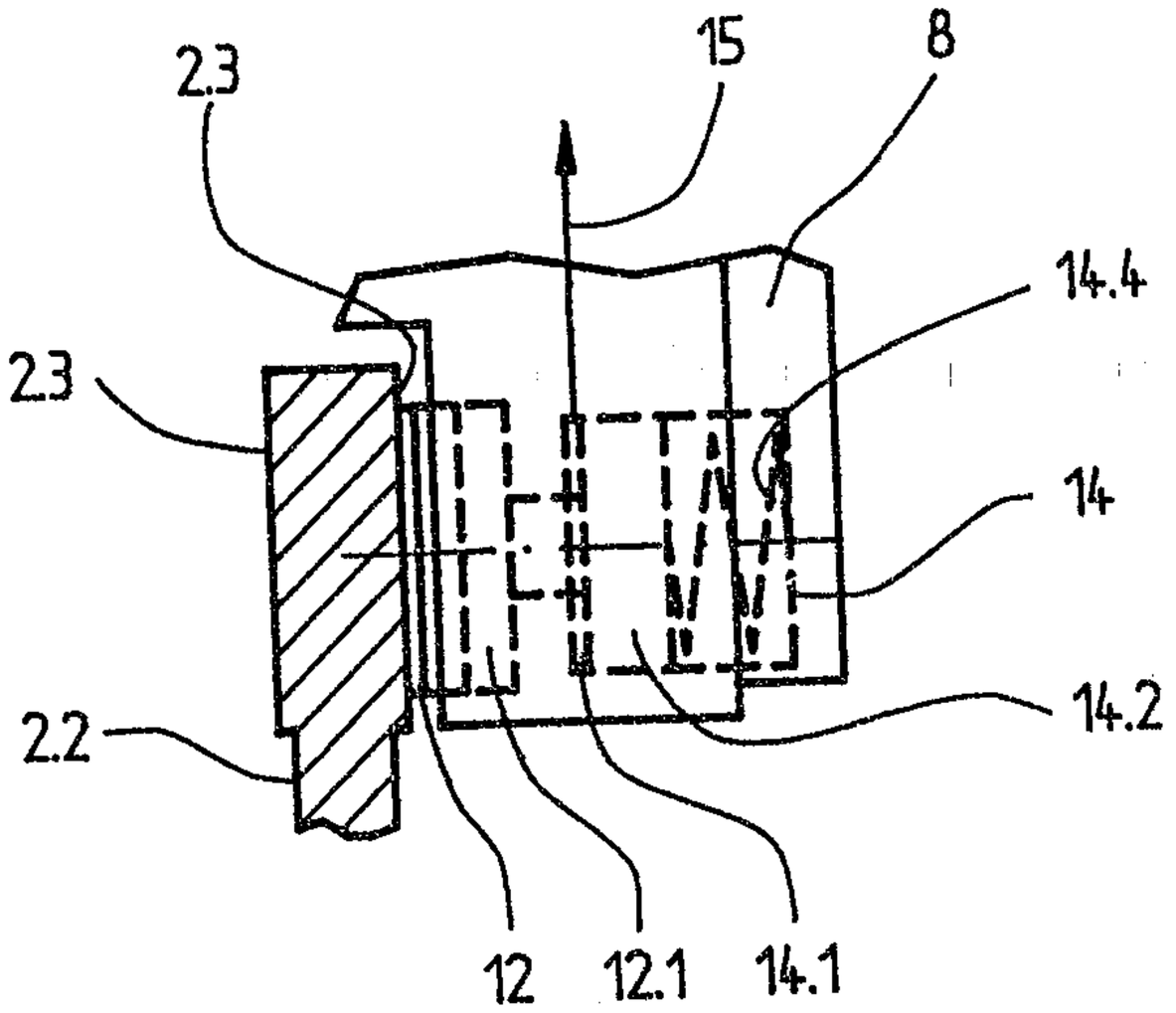
23
15
8
14.4
23
14
22
14.2
12
12.1
14.1

Fig. 11

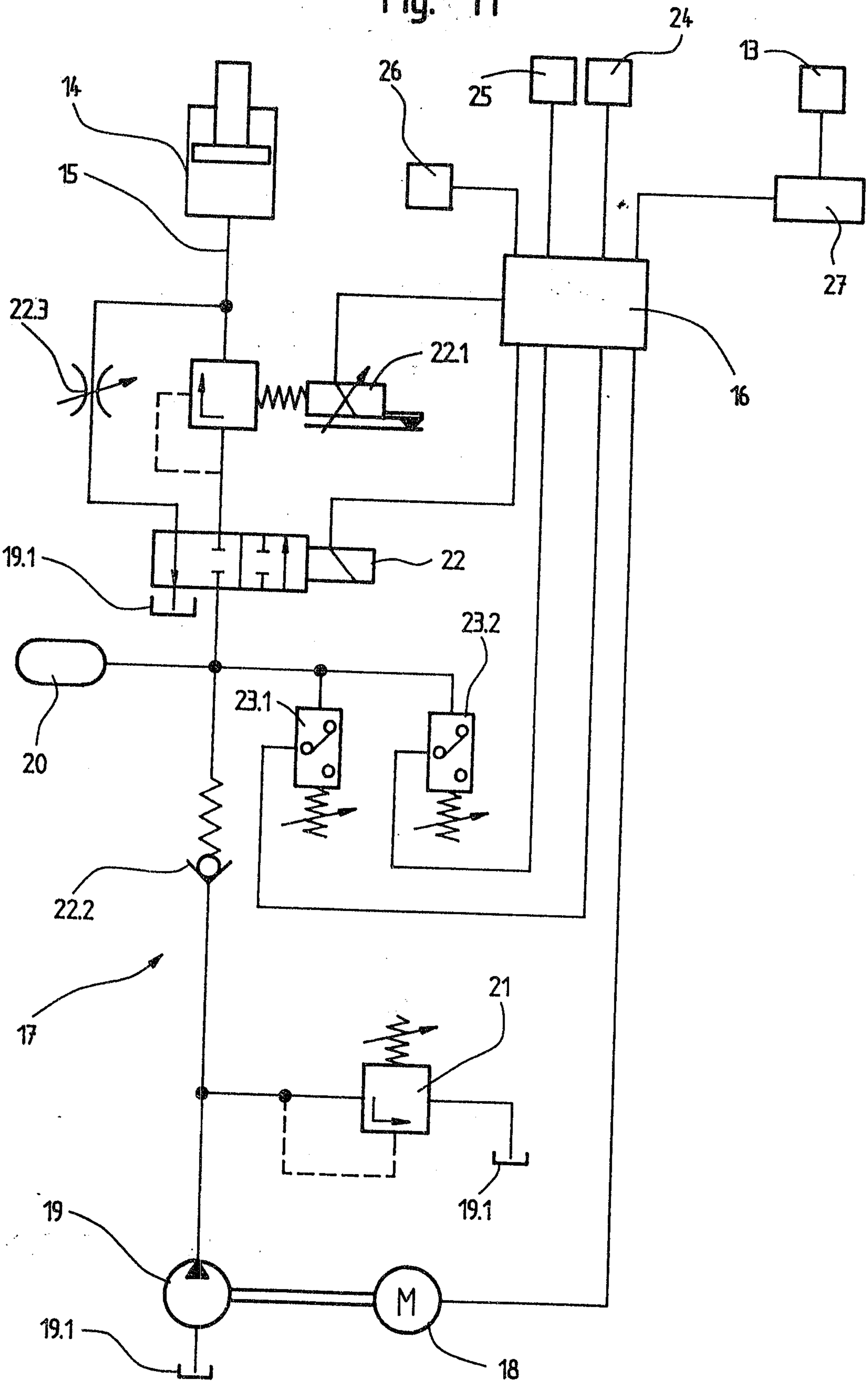
14
15
22.3
22.1
24
26
25
13
27
16
19.1
22
23.2
23.1
20
22.2
17
21
19.1
19
19.1
M
18

Fig. 12

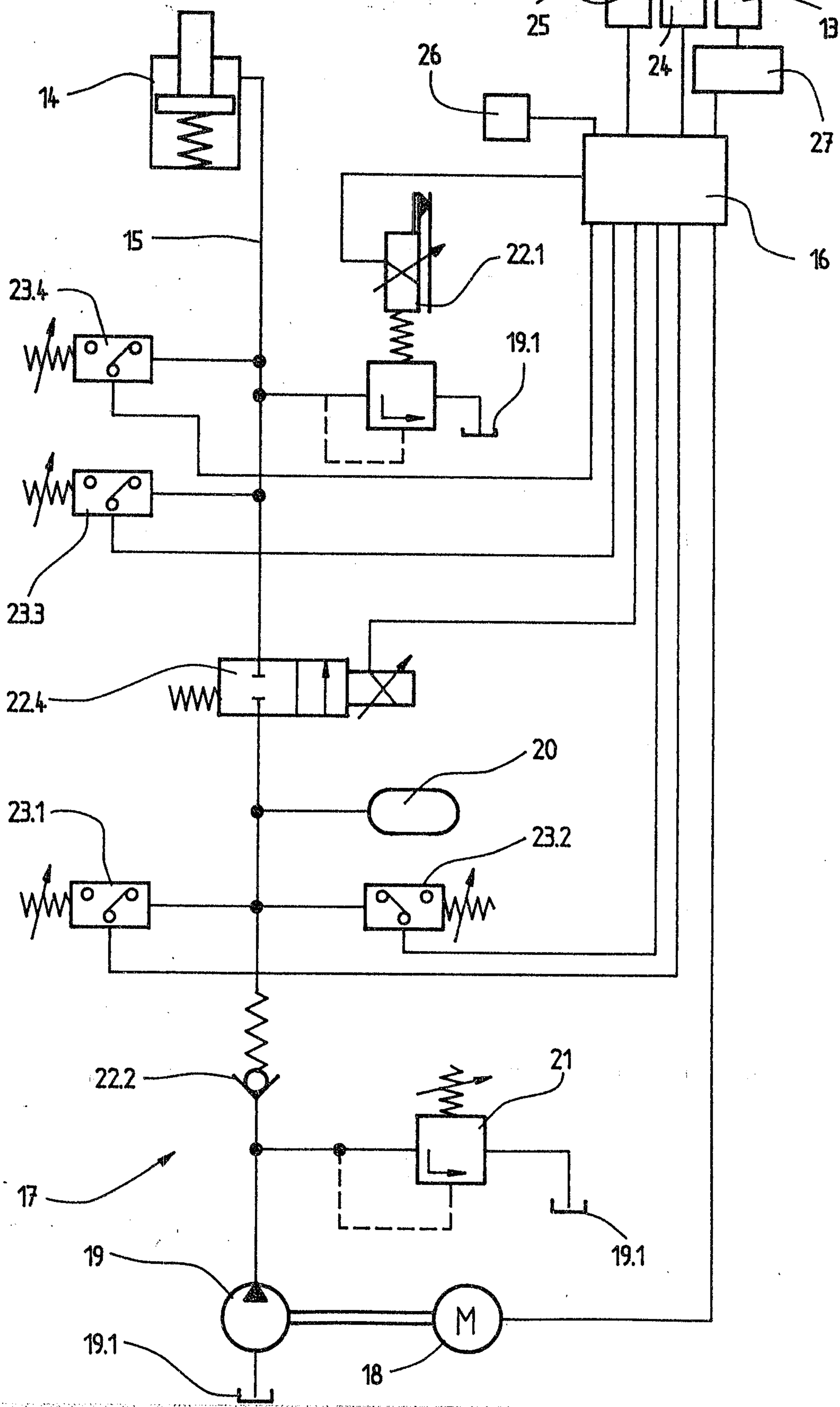
25
13
26
24
27
14
15
16
22.1
23.4
19.1
23.3
22.4
20
23.1
23.2
22.2
21
17
19
19.1
M
18
19.1

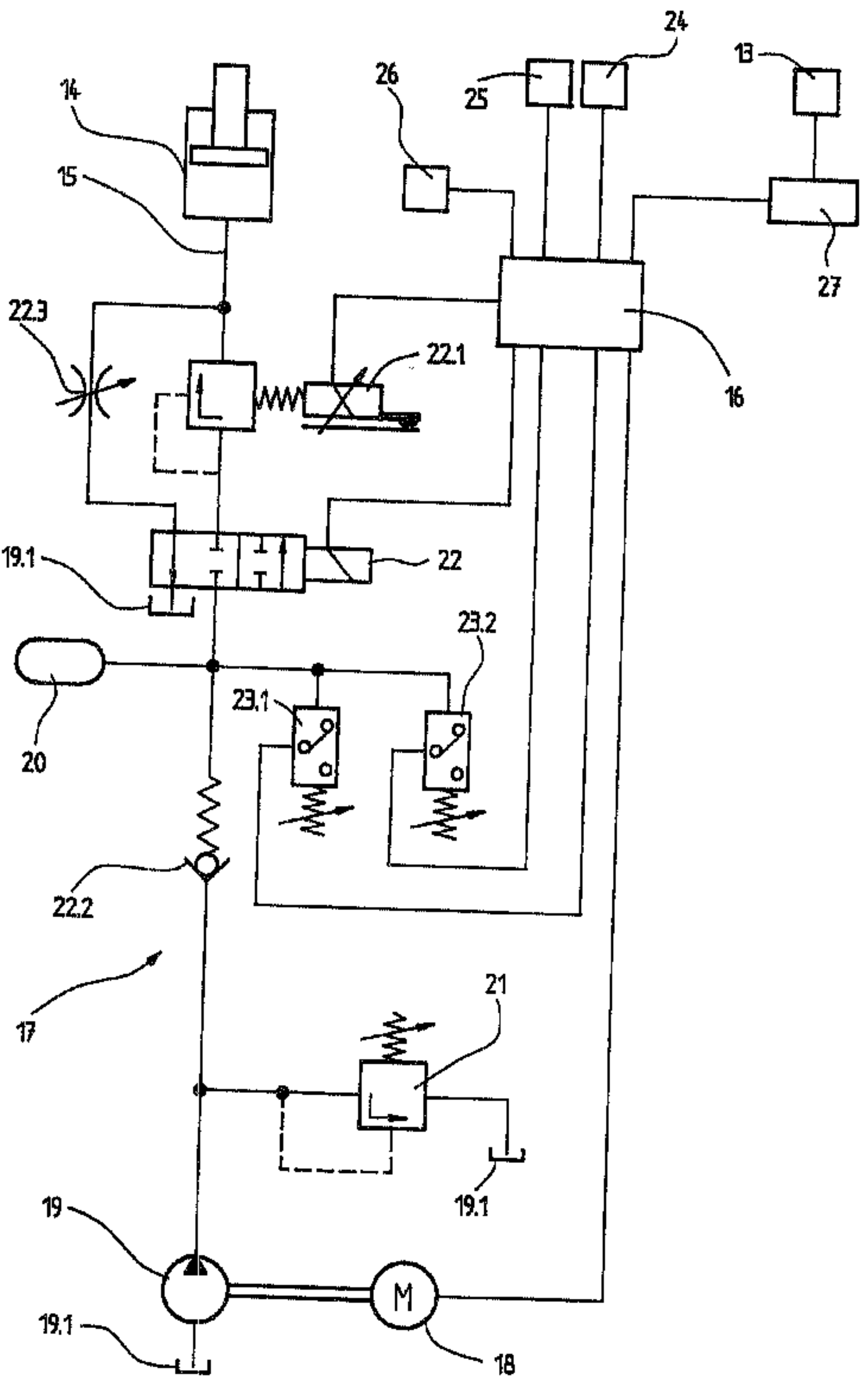
14
15
26
25
24
13
27
22.3
22.1
16
19.1
22
23.2
23.1
20
22.2
17
21
19.1
19
M
19.1
18