Sept. 19, 1967 KARL-HEINZ SCHMIDT ETAL 3,342,992

SAMPLE CHANGING DEVICES FOR ELECTRON MICROSCOPES AND ELECTRON DIFFRACTION APPARATUS

Filed June 30, 1964

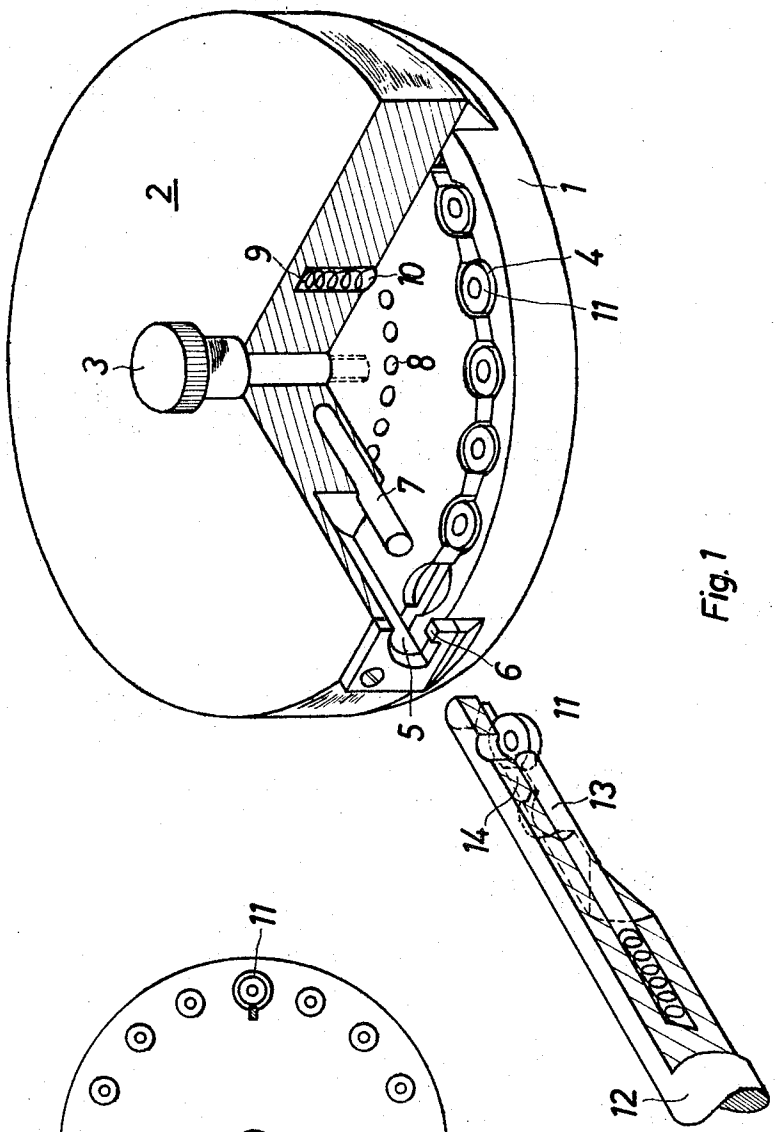

Fig. 1

Fig. 2

Inventors

Wolfgang Fischer

Karl-Heinz Schmidt

United States Patent Office 3,342,992 Patented Sept. 19, 1967

3,342,992

SAMPLE CHANGING DEVICES FOR ELECTRON MICROSCOPES AND ELECTRON DIFFRACTION APPARATUS

Karl-Heinz Schmidt and Wolfgang Fickler, Jena, Germany, assignors to VEB Carl Zeiss Jena, Jena, Germany

Filed June 30, 1964, Ser. No. 379,405
4 Claims. (Cl. 250—49.5)

Objects to be examined in transmission-type electron microscopy or transmission-type electron diffraction are prepared on latticed slides or single-hole diaphragms (hereinafter referred to as specimens). The specimens for the purpose of airlocking them in the vacuum of the electron microscope or in that of the electron diffraction apparatus, and of displacing them in that vacuum at right angles to the electron beam, are fixed in suitable holders, for instance placed in cylinders or screwed into sleeves. After examination, the specimens are removed from their holders and often laid aside for safekeeping.

The manipulation of inserting a specimen into and removing it from its holder is effected in the known manner by means of a pincette. Of course it is possible outside the darkened microscope room to place a plurality of specimens into a corresponding number of holders, but also in this case it is necessary to have recourse to the services of a pincette. The operations of removing and inserting the specimens by hand cannot accordingly be avoided. Such manipulation at the instrument itself would be rather precarious, due to red-light predominancy.

It is an object of the present invention to overcome the foregoing disadvantages by providing a device for changing the object in the object holder which ensures safe handling of the specimens at the electron microscope itself, even in very poor light.

The object changing device according to the invention is a receptacle which can contain a plurality of specimens and can be fitted to the object holder in such a manner that, in the act of fitting, a stop in the object holder is so released as to let the object drop into a corresponding bore in the receptacle or to let the object drop from the receptacle into the object holder, in which the object, if so required, can be arrested when the object holder and the receptacle fitted together are separated from each other. The receptacle may consist of two plates which are rotatable relatively to each other, the one plate having a plurality of circularly arranged bores, one for each specimen. Also it is possible to use a receptacle consisting of two plates which are displaceable relatively to each other.

In order that the invention may be more readily understood, reference is made to the accompanying drawing, which illustrates diagrammatically and by way of example two embodiments thereof, and in which:

FIG. 1 is a perspective view of the one embodiment, and

FIG. 2 shows a cross section of the other embodiment.

The receptacle shown in FIG. 1, which can hold a plurality of specimens, comprises a lower plate **1** and an upper plate **2**. The plates **1** and **2** are suitably of transparent material and held together by a bolt **3**. The lower plate **1** has a plurality of circularly arranged bores **4** for specimens **11**. The upper plate **2** has a marginal cutout **5** into which an object holder **12** in the form of a rod can be inserted without the danger of twisting. A stripper **6** at the moment of insertion holds back the locking bolt **13** of the object holder **12**. Since the locking bolt **13** of the object holder **12** is made to press the specimen **11** into a guide groove **14** in the object holder **12**, a striker **7** is provided for getting the specimen into positions for insertion or removal when the object holder **12** is being inserted.

Changing the object is as follows:

The head of the object holder **12** is introduced into the cutout **5** of plate **2**. While the stripper **6** retains the locking bolt **13** in the object holder **12**, the striker **7** presses the specimen **11** into removal position, so that the specimen can fall into an empty bore **4**. Thereupon the lower plate **1** is rotated relatively to the upper plate **2** until the specimen to be received next comes to lie below the object holder **12**. The positions the circularly arranged bores **4** assume in consequence of the relative rotation of plates **1** and **2**, are tangibly marked by respective center marks **8**, likewise circularly arranged, into which clicks a ball **10** under pressure of a spring **9**. Rotating object holder and object changing device 180° relatively to each other about the longitudinal axis of the object holder causes the selected specimen to drop into the object holder in position for reception. When removing the object holder from the receptacle, the released locking bolt **13** pushes the specimen into the guide groove and arrests it.

The embodiment FIG. 2 is meant for object sleeves. A bore **11**, into which the sleeve (not shown) is to be inserted for an exchange of specimens, is in alignment with any one of the circularly arranged bores **4**.

The 180° rotation for the insertion of a specimen into the object holder can of course be avoided by a lever arrangement which, influenced by the operator's finger, pushes the specimen from below into the object holder.

We claim:

1. A device for changing the object in the object holder of an electron microscope or electron diffraction apparatus comprising a receptacle consisting of two plates, one of said plates lying in shiftable connection on the other, the lower of said plates having a plurality of bores, each of said bores being adapted to receive a specimen, the upper of said plates having a marginal cutout for insertion of a rod-like object holder having a locking bolt and a stop and a stripper for holding back said locking bolt after insertion of said object holder, said stop in said object holder being so released by the insertion as to let the specimen contained in the object holder drop into one of said bores of said lower plate or to let a specimen drop from one of said bores of said lower plate into said object holder.

2. A device for changing the object in the object holder of an electron microscope or electron diffraction apparatus comprising a receptacle consisting of two circular plates lying upon one another and rotatable relatively to each other, the lower of said plates having a plurality of circularly arranged bores, each of said bores being adapted to receive a specimen, the upper of said plates having a marginal cutout for insertion of a rod-like object holder having a locking bolt and a stop and a stripper for holding back said locking bolt after insertion of said object holder, said stop in said object holder being so released by the insertion as to let the specimen contained in the object holder drop into one of said bores of said lower plate or to let a specimen drop from one of said bores of said lower plate into said object holder.

3. A device for changing the object in the object holder of an electron microscope or electron diffraction apparatus comprising a receptacle consisting of two plates, one of said plates lying in shiftable connection upon the other, the lower of said plates having a plurality of bores, each of said bores being marked by a cipher or another sign and adapted to receive a specimen, the upper of said plates having a marginal cutout for insertion of a rod-like object holder having a locking bolt and a stop and a stripper for holding back said locking bolt after insertion of said object holder, said stop in the object holder being so released by the insertion as to let the specimen contained in the object holder drop into one of said bores of said lower plate or

to let a specimen drop from one of said bores of said lower plate into said object holder.

4. A device for changing the object in the object holder of an electron microscope or electron diffraction apparatus comprising a receptacle consisting of two circular plates lying upon one another and rotatable relatively to each other, the lower of said plates having a plurality of circularly arranged bores, each of said bores being adapted to receive a specimen, and circularly arranged center marks corresponding to said bores, the upper of said plates having a marginal cutout for insertion of a rod-like object holder having a locking bolt and a stop and a stripper for holding back said locking bolt after insertion of said object holder, said stop in the object holder being so released by the insertion as to let the specimen contained in the object holder drop into one of said bores of said

lower plate or to let a specimen drop from one of said bores of said lower plate into said object holder, said upper plate having a bore containing a pressure spring and a ball, said ball being so pressed by said spring as to engage in one of said center marks of said lower plate.

References Cited

UNITED STATES PATENTS

2,500,492	3/1950	Henriques	250—106
2,924,718	2/1960	Packard et al.	250—71.5
3,047,124	7/1962	Wexler	88—14

RALPH G. NILSON, *Primary Examiner.*

A. L. BIRCH, *Assistant Examiner.*