Dec. 12, 1944. H. LAW 2,364,986

WORK HANDLING APPARATUS

Filed June 16, 1943

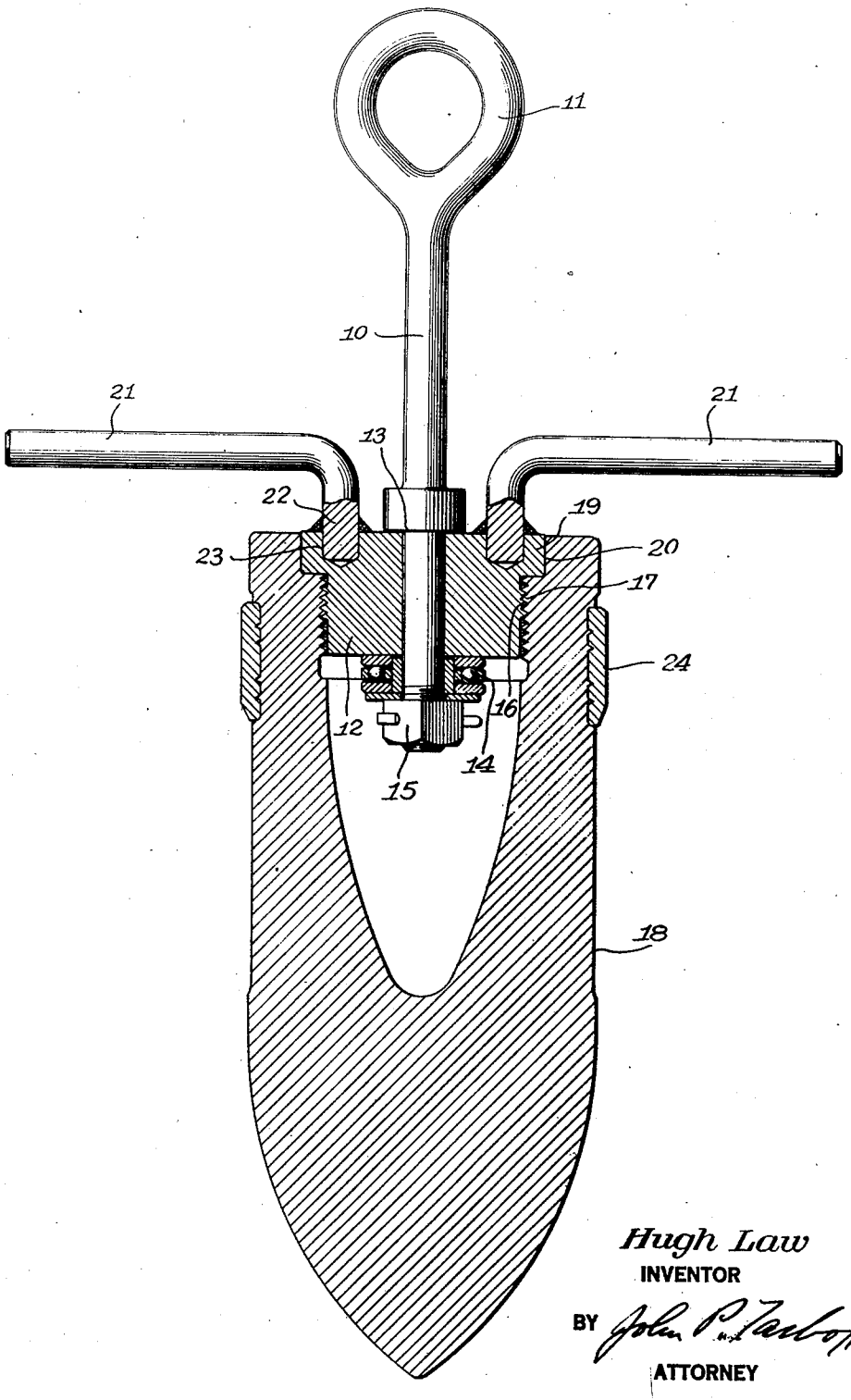

Hugh Law
INVENTOR

BY John P. Taylor
ATTORNEY

Patented Dec. 12, 1944 2,364,986

UNITED STATES PATENT OFFICE

2,364,986

WORK HANDLING APPARATUS

Hugh Law, Detroit, Mich., assignor to Budd Wheel Company, Philadelphia, Pa., a corporation of Pennsylvania

Application June 16, 1943, Serial No. 491,017

2 Claims. (Cl. 91—60)

This invention relates to a work holding apparatus and more particularly to a device for supporting such articles as finished shell forgings, or the like, during the final step of painting the outer surfaces thereof.

In this operation it is customary to mount the workpiece on a traveling conveyor by which it is carried past paint sprayers, or the like, where the outer surface is covered with a protective coating of paint. In the case of shell forgings and similar articles it is usually desirable to rotate the workpiece during its travel to provide an even coating around its entire surface, and at the same time to protect the interior against the ingress of any paint.

An object of this invention is to provide a support for workpieces constructed and arranged to permit easy attachment to and detachment from a traveling conveyor, or the like, and also to permit rotation of the workpiece to be rotated during its travel. A further object is to provide a device for supporting shells during the painting thereof arranged to seal the open end of the shell to protect the interior thereof against possibility of any paint being sprayed therein. These and other objects are accomplished by the present invention, one embodiment of which is illustrated in the accompanying drawing in which the single figure is a sectional view through a work support constructed in accordance with one embodiment of this invention and showing a shell forging secured in place thereon.

As illustrated, the invention comprises a hanger 10 having means such as an eye 11 to permit its ready attachment to and detachment from a suitable conveyor or the like, not shown. A shell supporting collar 12 is rotatably mounted on the lower end of the hanger 10 between a collar positioning shoulder 13 and a collar supporting ball bearing 14 held in place at the lower end of the hanger by a nut 15 or other securing means.

The rotatable collar 12 is provided with shell securing means such as threads 16 adapted to engage threads 17 formed within the open end of the shell forging 18, and the collar is so shaped as to form a closure plug for the open end of the shell. In the illustrated embodiment, the collar is provided with a circular flange 19 at its upper edge which seats in the countersink 20 in the shell opening so as to form a seal preventing the ingress of paint or the like into the shell cavity. Means such as handle bars 21 are mounted on the top of the rotatable collar in such a position as not to interfere with the securing of shells thereon, and extend outwardly from the collar to a point where they can be grasped for manually imparting rotation to the collar 12 and its supported shell by spinning the same.

The handle bars 21 have vertically extending ends 22 seated in sockets 23 and welded or otherwise secured in place.

In operation, a shell 18 is secured on the collar 12 by threading the collar into the open threaded end of the shell cavity. In order to protect the rifling band 24 against painting, a protective band or collar, not shown, is secured in place around the rifling band. It will be apparent that the hanger 10 can be easily mounted upon a suitable hook or the like extending downwardly from the conveyor. Painting is usually accomplished by spraying and rotation can be easily imparted to the shell during the painting operation by gripping and whirling the handle bars 21, the ball bearing 14 permitting the rotation to continue under its own momentum for a substantial time as the shell 18 functions in the manner of a flywheel to maintain rotation for a prolonged period.

It will be obvious that the invention can be variously modified and adapted within the scope of the appended claims.

What is claimed is:

1. Apparatus for supporting open-ended articles during painting thereof, comprising a hanger, a collar rotatably supported on said hanger and adapted to close the open end of an open-ended article, means for securing the article to said collar, and means extending outwardly from said collar to impart rotation thereto.

2. Apparatus for supporting open-ended articles during painting thereof comprising a hanger having means at one end for easy attachment to and detachment from a conveyor, an article supporting member rotatably mounted on said hanger, means for securing the open end of an open-ended article to said member so as to close said end against ingress of liquid, and a handle bar extending outwardly from said member for imparting rotation thereto.

HUGH LAW.