Jan. 26, 1960 S. YANDO 2,922,923

ELECTROLUMINESCENT DEVICES

Filed March 19, 1959 2 Sheets-Sheet 1

Fig. 2

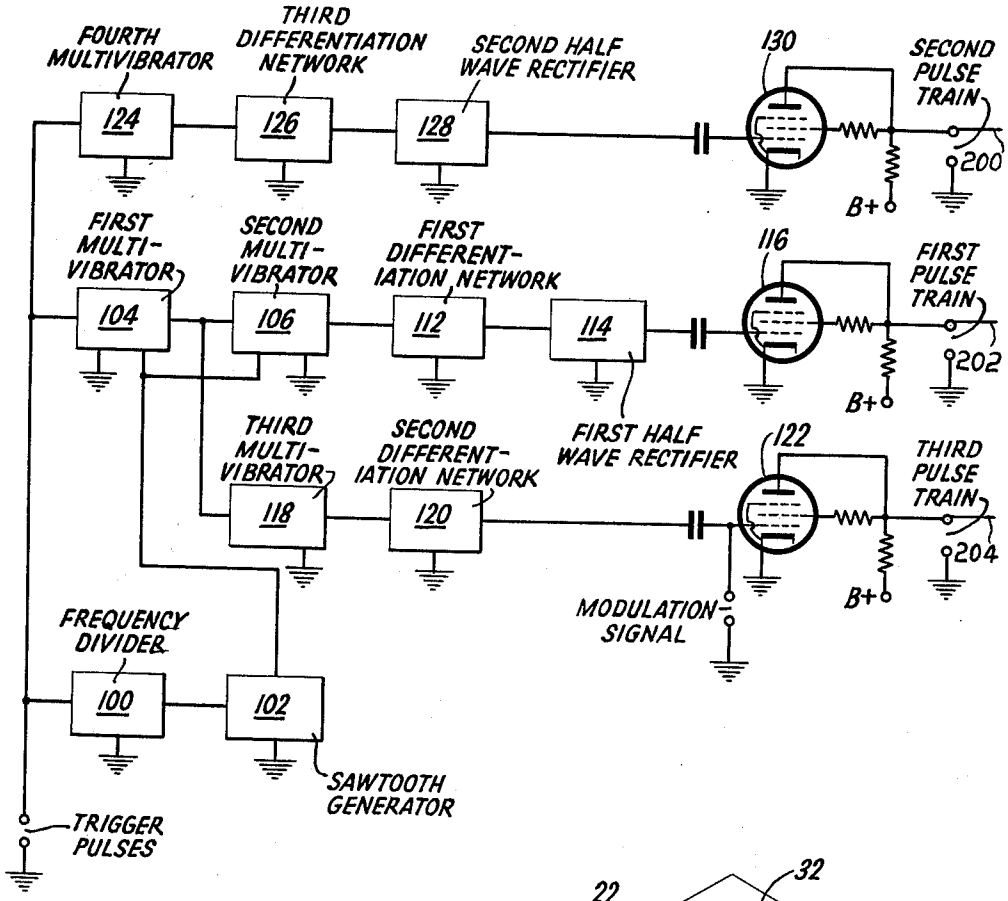

Fig. 1

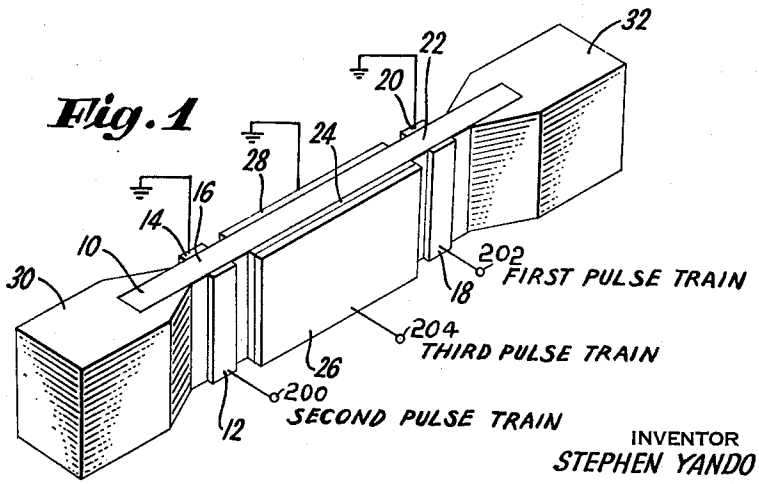

INVENTOR
STEPHEN YANDO
BY
ATTORNEY

Jan. 26, 1960 S. YANDO 2,922,923

ELECTROLUMINESCENT DEVICES

Filed March 19, 1959 2 Sheets-Sheet 2

Fig. 3

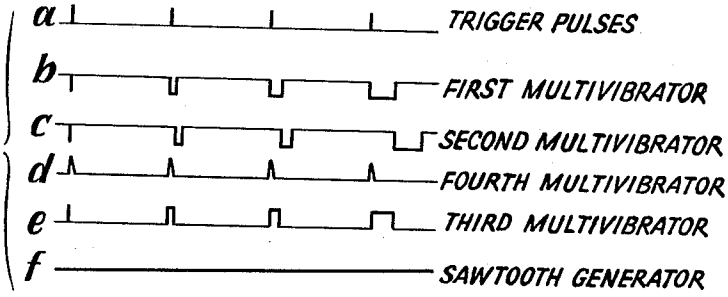

Fig. 4

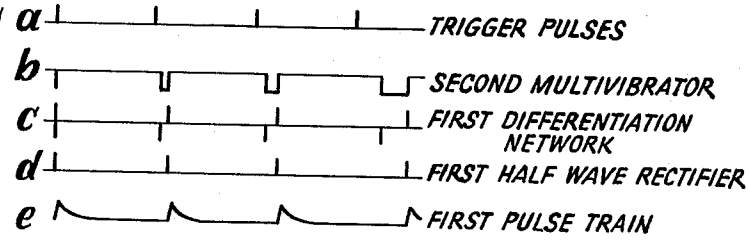

Fig. 5

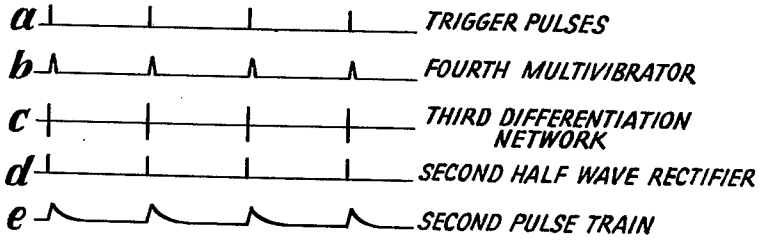

Fig. 6

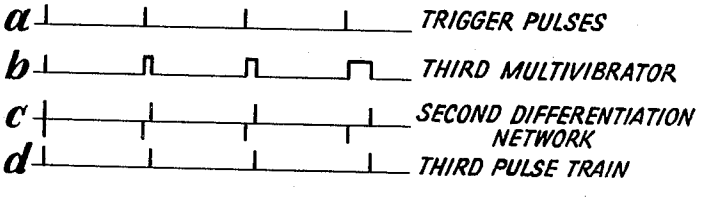

Fig. 7

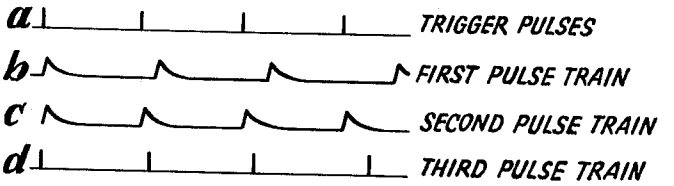

INVENTOR
STEPHEN YANDO
BY Theodore Jay Jr.
ATTORNEY

United States Patent Office 2,922,923
Patented Jan. 26, 1960

2,922,923

ELECTROLUMINESCENT DEVICES

Stephen Yando, Huntington, N.Y., assignor to Sylvania Electric Products Inc., a corporation of Delaware

Application March 19, 1959, Serial No. 800,434

11 Claims. (Cl. 315—55)

My invention is directed toward electroluminescent devices.

In my copending patent application, Serial No. 776,980, filed November 28, 1958, I disclosed a new type of electroluminescent device wherein, in response to an incoming voltage pulse, a spot of light was caused to traverse (or scan) an electroluminescent layer.

As explained in more detail in this application, first and second contacts, positioned opposite each other, are secured to opposite surfaces of a crystalline piezoelectric strip adjacent one end thereof. An electroluminescent layer is placed in intimate engagement with one surface of the strip intermediate one of the contacts and the other end of the strip. A voltage pulse, applied between the contacts, produces, in the portion of the strip subtended by the contacts, a mechanical strain proportional to the amplitude of the pulse. The changing strain produces a disturbance, in the form of an elastic wave accompanied by an electric field, which propagates along the strip from the contacts toward the other end of the strip. As the elastic wave propagates along the strip, the accompanying electric field products a spot of light in the electroluminescent layer which moves in synchronism with the wave.

In the above described invention, the period of time (or scanning interval) required for the spot of light to traverse the electroluminescent layer is determined both by the velocity of propagation of the elastic wave within the strip, and the length of the electroluminescent layer. For any selected type of strip, this velocity is a constant, and the scanning interval can only be varied by increasing or decreasing the length of the strip.

I have succeeded in eliminating the interdependence of the scanning interval and the velocity of propagation of an elastic wave in an electroluminescent device of the character indicated. More particularly, I am able to vary the scanning interval while maintaining a fixed length of piezoelectric strip and, conversely, am able to vary the length of the strip while maintaining a fixed scanning interval.

In accordance with the principles of my invention, first and second contacts are respectively secured to opposite surfaces of a strip of crystalline, piezoelectric material adjacent one end thereof and thus subtend a first section of the strip. Further, third and fourth contacts are respectively secured to the front and rear surfaces of the strip adjacent the other end of the strip and thus subtend a second section of the strip. The ends of the strip are terminated in such manner as to absorb, substantially without reflection, any incident elastic wave supplied thereto from said strip.

An electroluminescent layer is placed in intimate engagement with the front surface of the strip in a position intermediate the appropriate contacts. A transparent electrode (the front electrode) is applied over the exposed surface of this layer. Further, another electrode (the back electrode) is applied to the rear surface of the strip (i.e. the surface of the strip remote from the electroluminescent layer).

First and second pulse trains are applied between the first and second contact pair and the third and fourth contact pair respectively. Each pulse in each of these trains produces, in the corresponding first or second section of the strip, a mechanical strain proportional to the amplitude of the pulse. As this strain changes, a disturbance in the form of an elastic wave accompanied by an electric field, propagates along the strip from the appropriate section towards the other end of the strip where it is absorbed substantially without reflection.

More particularly, each pulse in the first pulse train produces a first elastic wave, accompanied by a first electric field, which propagates from the first section toward the second section of the strip. Similarly, each pulse in the second pulse train produces a second elastic wave, accompanied by a second electric field, which propagates from the second section toward the first section. The intensity of each electric field is proportional to the time rate of change of the strain which produced it; stated differently, the intensity of each electric field is proportional to the first time derivative of the pulse which produced the field.

When any first wave intersects any second wave, the corresponding electric fields are additive at the part of intersection.

A third pulse train is applied between the front and back electrodes. Each pulse in the third train produces a third electric field which is perpendicular to both electrodes and which is uniform throughout the entire electroluminescent layer. At any point of wave intersection, the first, second and third fields are additive and produce a spot of light on the electroluminescent layer at a position corresponding to this point of intersection. The amount of light emitted from this spot is determined by the total field intensity and increases monotonically therewith.

The position of the spot of light depends upon the relative timing of the pulses in the three pulse trains. Hence, by continuously varying the relative timing of these pulses, the spot of light will "scan" the strip at a velocity dependent upon the rate of timing variation. Further, the light intensity of this spot can be modulated by appropriately varying the pulse amplitude.

Illustrative embodiments of my invention will now be described with reference to the accompanying drawings wherein—

Fig. 1 is an isometric view of one embodiment of my invention;

Fig. 2 is a block diagram of an electronic system wherein the relative timing and amplitudes of the first, second and third pulse trains can be varied as required for the device of Fig. 1; and

Figs. 3–7 show the waveforms of signals utilized in the system of Fig. 2.

Referring now to Fig. 1, there is shown a thin strip or ribbon **10** of piezoelectric material; in this example the material is a polarized ceramic strip composed of a sintered lead titanate-lead zirconate mixture. First and second contacts **12** and **14** which extend transversely to the long axis of the strip are secured to opposite surfaces of the strip adjacent the left end thereof; these electrodes are positioned opposite each other and subtend a first section **16** of the strip. Similarly, third and fourth transverse contacts **18** and **20** are secured to opposite surfaces of the strip adjacent the right end thereof and subtend a second region **22** of the strip.

An electroluminescent layer **24** is placed in intimate contact with one surface of strip **10** intermediate the ends thereof and spaced apart from the contacts **12** and **18**. A transparent or front electrode **26** covers the exposed

surface of layer 24. A second or back electrode 28 covers the same area as front electrode 26, but is applied to the surface of strip 10 remote from electroluminescent layer 24.

Each end of the strip, as explained in more detail in the above mentioned copending application Serial No. 776,980, is terminated in such manner as to absorb, substantially without reflection, any incident elastic wave propagating in said strip. This is accomplished by coating the ends and immediately adjacent portions of strip 10 with a material, such as lead, to provide terminations 30 and 32.

First and second pulse trains are applied between contacts 18 and 20 and contacts 12 and 14, respectively. Each pulse in each train establishes a corresponding electric field within an appropriate one of sections 16 and 22. The electric field intensity is proportional to the instantaneous value of the appropriate voltage pulse.

Due to the piezoelectric characteristics of strip 10, each electric field produces, in the corresponding section 16 or 22, a mechanical strain proportional to the instantaneous field intensity. Hence, this strain is proportional to the instantaneous value of the pulse. The strain produces a disturbance which is proportional to the time rate of change of the strain and, consequently, is also proportional to the first time derivative of the pulse. This disturbance propagates along the strip in the form of oppositely directed elastic waves travelling toward the right hand and left hand respectively of strip 10.

More particularly, the first pulse produces a first elastic wave which travels from section 22 toward the left hand end of the strip. (The first pulse also produces an oppositely directed wave which is absorbed almost immediately in termination 32 and has no influence upon the operation of my device.) The second pulse produces a second elastic wave which travels from section 16 toward the right hand end of the strip. (The second pulse also produces an oppositely directed wave which is absorbed in termination 30.)

Each of the first and second waves, due to the piezoelectric effect, is accompanied by an electric field, the intensity of which is proportional to the first time derivative of the appropriate pulse. The intensities of both fields are additive at the point of intersection of the first and second waves.

A third pulse train is applied between the front and back electrodes 26 and 28 respectively. Each pulse in the third train is generated at such timing with respect to the pulses in the first and second train as to establish a third uniform electric field within the entire electroluminescent layer 24 at the time at which the desired intersection of the first and second elastic waves ensues. Since, with this timing, the intensities of the three electric fields are additive at the point of intersection, a spot of light is produced in the electroluminescent layer at a position corresponding to this point. The amount of light produced increases monotonically with increasing total field intensity.

The intersecting waves, in the absence of the third pulse train, tend to produce a spot of light in the electroluminescent layer at a position corresponding to the point of intersection. However, the non-linear voltage-brightness characteristics are such that suitable adjustment of pulse amplitudes can reduce any spurious or background lighting to insignificant levels. For example, when the pulses in the first and second trains each have an amplitude of V volts, and the pulses in the third train have a value ranging between 0–V volts, spurious lighting effects are substantially eliminated.

The intersection of any first elastic wave with any second elastic wave can be viewed as establishing a light aperture at a selected position on the electroluminescent layer 24; light will be produced in this aperture only when a pulse in the third train is applied with proper timing between the front and back electrodes.

When the first and second voltage pulses arrive in time synchronism at the corresponding contact pairs, the aperture will be positioned at the midpoint between the contact pairs. When the first pulse leads the second pulse, the aperture will be displaced to the right of the midpoint; when the second pulse leads the first pulse, the aperture will be displaced to the left of the midpoint.

More particularly, the time interval required for the elastic wave to traverse that segment of strip 10 in contact with the electroluminescent layer 24 is normally some constant K. When substantially identical first and second pulses are supplied to the corresponding contact pairs at the same time t_0, the corresponding first and second waves will intersect at the midpoint of layer 24 at time $t_0+K/2$. Hence, by supplying a pulse in the third train between the front and back electrodes at time $t_0+K/2$, light will be produced at this midpoint.

When the second pulse is supplied at time t_0, while the first pulse is supplied at time t_0+K, the waves will intersect at time t_0+K, and the aperture will be immediately adjacent contact 12. The pulse in the third train must be supplied at time t_0+K to illuminate the aperture thus formed.

On the other hand, when the second pulse is supplied at time t_0, while the first pulse is supplied at time $t_0,-K$, the waves will intersect at time t_0, and the aperture will be immediately adjacent contact 18. In this case, the pulse in the third train must be supplied at time t_0 to produce light in this aperture.

In this manner, the spot of light can be produced in any desired horizontal position along the electroluminescent layer. Further, the spot can be moved in successive positions from the extreme left hand to the extreme right hand edges of the electroluminescent layer 24, thus producing the desired scanning action.

The scanning action can be carried out in the following manner. A first pulse train containing x separate first pulses (where x is the number of different positions assumed by the spot of light in traversing the length of the electroluminescent layer) is applied between contacts 12 and 14. A second pulse train containing x separate second pulses is applied between contacts 18 and 20. A third pulse train containing x separate third pulses is applied between the front and back electrodes 24 and 26.

The time relationship between each Nth first, second and third pulses (where N is any integer from 1 to x) is adjusted as follows. The Nth first pulse is produced at time $2a$ (where a is smoothly varied from 0 when N is equal to 1 to K when N is equal to x). The Nth second pulse is produced at time K (i.e. the time separation between the Nth second and first pulses is $K-2a$). The Nth third pulse is produced at time $K+a$ (i.e. the time separation between the Nth second and Nth third pulses is $-a$).

In particular, the scanning operation is initiated when the first pulse in the first train leads the first pulse in the second train by K and the first pulse in the third train is in time coincidence with the first pulse in the second train. The scanning operation is completed when the xth pulse in the first train lags the xth pulse in the second train by K and the xth pulse in the third train is in time coincidence with the xth pulse in the first train. The resulting relationships between the first, second and third pulse trains are shown graphically in Fig. 7.

It is desired that the electroluminescent layer be excited by sharp, spike-like pulses. Due to the differentiating action of the strip 10, the pulses in both the first and second trains must have the sawtooth waveform shown to provide this type of excitation.

A block diagram of circuitry for accomplishing the scanning operation is shown in Fig. 2. (The circuitry designated by each block in this diagram is conventional and will not be shown here.)

The circuit of Fig. 2 is actuated by an input signal constituted by x separate, equidistantly spaced timing or trig-

ger pulses. The time spacing between adjacent trigger pulses is K or in other words, the recurrence frequency of the trigger pulses is $1/K$.

The trigger pulses are supplied through a frequency divider **100** to the input of a saw tooth generator **102**. Divider **100** produces one sharp divider pulse for every group of x trigger pulses supplied to the divider input. More particularly, the divider produces an output pulse for each incoming (mx) trigger pulse, where m is any integer and x has been defined previously. Each divider pulse actuates the generator **102** which thereupon yields an output voltage having a sawtooth waveform. This voltage increases positively from 0, the period of the sawtooth being xK.

The trigger pulses are also supplied to a first multivibrator **104**. The output of multivibrator **104** is coupled to the input of a second multivibrator **106**. These two multivibrators **104** and **106** have variable but equal periods of a seconds, where a varies from essentially 0 when the first trigger pulse arrives, to K when the xth trigger pulse is received. The length of both equal periods is determined by a control voltage supplied from the output of sawtooth generator **102** to the control inputs **108** and **110** of multivibrators **104** and **106** respectively.

The output signal yielded by the second multivibrator **106** passes successively through a first differentiation network **112** and a first half wave rectifier **114** to the input of pentode tube **116**. The output circuit of tube **116** is coupled between contacts **18** and **20** of strip **10** of Fig. 1. The resultant signals appearing between terminal **202** and ground and thus supplied to strip **10** from tube **116** form the first pulse train of x separate pulses having a sawtooth waveform.

The output of the first multivibrator **104** is also coupled to the input of a third multivibrator **118**. (Multivibrator **118** has a fixed period equal to the interval K.) The output signal yielded by the third multivibrator **118** passes successively through a second differentiation network **120** to the input of pentode tube **122**. The output circuit of tube **122** is coupled between the front and back electrodes **24** and **26** of the strip **10** of Fig. 1. The resultant signals appearing between terminal **204** and ground and thus supplied to these front and back electrodes from tube **122** is the third pulse train of x separate pulses having a spike waveform. The amplitudes of the pulses in the third train are increased or decreased with the amplitude variations of a modulation signal supplied to the input of tube **122**.

The trigger pulses are also supplied to the input of a fourth multivibrator **124**. (Multivibrator **124** has a fixed period equal to the interval K.) The output signal yielded by multivibrator **124** passes successively through a third differentiation network **126** and a second half wave rectifier **128** to the input of pentode tube **130**. The output circuit of tube **130** is coupled between contacts **12** and **14** of strip **10** of Fig. 1. The resultant signals appearing between terminal **200** and ground and thus supplied to strip **10** from tube **130** form the second pulse train of x separate pulses having a sawtooth waveform.

The operation of the system of Fig. 2 will now be described with reference to the waveforms shown in Figs. 3a–3e. These waveforms show a portion of the pulse sequence.

The trigger pulses (Fig. 3a) are supplied through frequency divider **100** to the input of the sawtooth generator **102** which produces an output voltage having a sawtooth waveform (Fig. 3f) in the manner previously described.

Further the trigger pulses are supplied to the input of the first multivibrator **104**. Upon the arrival of each trigger pulse, the first multivibrator produces a rectangular shaped pulse (Fig. 3b) having a period a which increases from essentially 0 to K in accordance with the changing sawtooth voltage developed by generator **102** and is supplied as a control input to multivibrators **104** and **106**. Upon the termination of a first period of a, the second multivibrator produces another rectangular

shaped pulse (Fig. 3c) having the same variable period a.

The rectangular shaped pulses appearing at the output of the second multivibrator, as can be seen from Fig. 4, are differentiated in network **112**, to produce alternatively positive and negative pulses (Fig. 4). These positive and negative going pulses are supplied to the first half wave rectifier **114** which permits only the positive pulses to pass therethrough (Fig. 4). These positive pulses then pass through tube **116** and appear across contacts **18** and **20** of strip **10** of Fig. 1 as the first pulse train of x separate, equidistantly spaced pulses (Fig. 4). (The two contacts **18** and **20** together with the section **22** of strip **10** constitute a capacitor. The combination of this capacitor and the resistor in the plate circuit of tube **116** acts upon the pulses passing through tube **116** to change their waveform from a spike to a sawtooth. As previously indicated, this waveform conversion is required because of the differentiating action of the strip **10**.)

The rectangular shaped pulse from the first multivibrator **104** is also supplied to the input of the third multivibrator **118**. As shown in both Figs. 3b and 3e and in Fig. 6b, upon the termination of each pulse for the first multivibrator **104**, the third multivibrator **118** produces a rectangular shaped pulse having a fixed period K. This fixed period pulse is differentiated in the second differentiation network to produce alternative positive and negative pulses (Fig. 6c), and the positive pulses pass through tube **122** to produce the third pulse train of x separate pulses having a spike waveform (Fig. 6d).

As shown in Fig. 5, the incoming trigger pulses are also supplied to the input of the fourth multivibrator **124**. Upon the arrival of each trigger pulse (Fig. 5a) the fourth multivibrator produces a rectangular shaped pulse having a fixed period K (Fig. 5b). These pulses are then differentiated in the third differentiation network **126** to produce alternative negative and positive pulses (Fig. 5c). The positive pulses pass through the second half wave rectifier **128** (Fig. 5d) to the input of tube **130**. In the same manner as previously described, these pulses are converted to the second pulse train of y different pulses having a sawtooth waveform (Fig. 5e).

In this manner, a spot of light is caused to traverse the electroluminescent layer, the intensity of the light spot and the velocity of travel of the spot being determined by the amplitudes and relative timing of pulses in the pulse trains.

It will be apparent that since contacts **14** and **20** and the back electrode are grounded, these contacts and electrode are electrically interconnected and can be replaced by a single common electrode.

What is claimed is:

1. An electroluminescent device comprising a strip of piezoelectric material; first and second contacts secured to opposite surfaces of said strip adjacent one end thereof; third and fourth contacts secured to opposite surfaces of said strip adjacent the other end thereof; an electroluminescent layer placed in intimate engagement with one of said surfaces intermediate the ends of the strip and spaced apart from said contacts; a first transparent electrode covering the exposed surface of said layer; and a second electrode covering the surface of said strip remote from said layer and spaced apart from the appropriate contacts.

2. An electroluminescent device comprising a strip of piezoelectric material; first and second contacts secured to opposite surfaces of said strip adjacent one end thereof; third and fourth contacts secured to opposite surfaces of said strip adjacent the other end thereof; an electroluminescent layer placed in intimate engagement with one of said surfaces intermediate the ends of the strip and spaced apart from said contacts; a first transparent electrode covering the exposed surface of said layer; a second electrode covering the surface of said strip remote from said layer and spaced apart from the appropriate contacts, and first and second terminations affixed to corresponding

ends of said strip, said terminations absorbing substantially without reflection any incident elastic wave supplied thereto from said strip.

3. An electroluminescent device comprising a strip of piezoelectric material; first and second contacts secured to opposite surfaces of said strip adjacent one end thereof; third and fourth contacts secured to opposite surfaces of said strip adjacent the other end thereof; an electroluminescent layer placed in intimate engagement with one of said surfaces intermediate the ends of the strip and spaced apart from said contacts; a first transparent electrode covering the exposed surface of said layer; a second electrode covering the surface of said strip remote from said layer and spaced apart from the appropriate contacts; first and second terminations affixed to corresponding ends of said strip, said terminations absorbing substantially without reflection any incident elastic wave supplied thereto from said strip; means to apply a first pulse train between said first and second contacts; means to apply a second pulse train between said third and fourth contacts, and means to apply a third pulse train between said first and second electrodes.

4. An electroluminescent device comprising a strip of piezoelectric material; first and second contacts secured to opposite surfaces of said strip adjacent one end thereof; third and fourth contacts secured to opposite surfaces of said strip adjacent the other end thereof; an electroluminescent layer placed in intimate engagement with one of said surfaces intermediate the ends of the strip and spaced apart from said contacts; a first transparent electrode covering the exposed surface of said layer; a second electrode covering the surface of said strip remote from said layer and spaced apart from the appropriate contacts; first and second terminations affixed to corresponding ends of said strip, said terminations absorbing substantially without reflection any incident elastic wave supplied thereto from said strip; means to apply a first pulse train between said first and second contacts; means to apply a second pulse train between said third and fourth contacts, and means to apply a third pulse train between said first and second electrodes, the pulses in said first and second trains having a sawtooth waveform, the pulses in said third train having a spike waveform.

5. An electroluminescent device comprising a strip of piezoelectric material; first and second contacts secured to opposite surfaces of said strip adjacent one end thereof; third and fourth contacts secured to opposite surfaces of said strip adjacent the other end thereof; an electroluminescent layer placed in intimate engagement with one of said surfaces intermediate the ends of the strip and spaced apart from said contacts; a first transparent electrode covering the exposed surface of said layer; a second electrode covering the surface of said strip remote from said layer and spaced apart from the appropriate contacts; first and second terminations affixed to corresponding ends of said strip, said terminations absorbing substantially without reflection any incident elastic wave supplied thereto from said strip; means to apply a first pulse train between said first and second contacts; means to apply a second pulse train between said third and fourth contacts; means to apply a third pulse train between said first and second electrodes, the pulses in said first and second trains having a sawtooth waveform, the pulses in said third train having a spike waveform; the pulses in said first and second train having a constant peak amplitude, the pulses in said third train being amplitude modulated.

6. An electroluminescent device comprising a strip of piezoelectric material; first and second contacts secured to opposite surfaces of said strip adjacent one end thereof; third and fourth contacts secured to opposite surfaces of said strip adjacent the other end thereof; an electroluminescent layer placed in intimate engagement with one of said surfaces intermediate the ends of the strip and spaced apart from said contacts; a first transparent electrode covering the exposed surface of said layer; a second electrode covering the surface of said strip remote from said layer and spaced apart from the appropriate contacts; first and second terminations affixed to corresponding ends of said strip, said terminations absorbing substantially without reflection any incident elastic wave supplied thereto from said strip; means to apply a first pulse train between said first and second contacts; means to apply a second pulse train between said third and fourth contacts, means to apply a third pulse train between said first and second electrodes; and means to vary the relative timing of corresponding pulses in each of said first, second and third trains.

7. An electroluminescent device comprising a strip of piezoelectric material; first and second contacts secured to opposite surfaces of said strip adjacent one end thereof; third and fourth contacts secured to opposite surfaces of said strip adjacent the other end thereof; an electroluminescent layer placed in intimate engagement with one of said surfaces intermediate the ends of the strip and spaced apart from said contacts; a first transparent electrode covering the exposed surface of said layer; a second electrode covering the surface of said strip remote from said layer and spaced apart from the appropriate contacts; first and second terminations absorbing substantially without reflection any incident elastic wave supplied thereto from said strip; means to apply a first pulse between said first and second contacts; means to apply a second pulse between said third and fourth contacts; and means to apply a third pulse between said first and second electrodes.

8. A device as set forth in claim 7 further including means to vary the relative timing of said first, second and third pulses.

9. An electroluminescent device comprising a strip of piezoelectric material; first and second contacts secured to opposite surfaces of said strip adjacent one end thereof; third and fourth contacts secured to opposite surfaces of said strip adjacent the other end thereof; an electroluminescent layer placed in intimate engagement with one of said surfaces intermediate the ends of the strip and spaced apart from said contacts; a first transparent electrode covering the exposed surface of said layer; a second electrode covering the surface of said strip remote from said layer and spaced apart from the appropriate contacts; first and second terminations affixed to corresponding ends of said strip, said terminations absorbing substantially without reflection any incident elastic wave supplied thereto from said strip; means to apply a first pulse between said first and second contacts to produce a first elastic wave which, accompanied by a first electric field, propagates along said strip toward said other end; means to apply a second pulse between said third and fourth contacts to produce a second elastic wave which, accompanied by a second electric field, propagates along said strip toward said one end, said first and second waves intersecting and establishing a light aperture at a position along said strip depending upon the relative timing of said first and second pulses; and means to apply a third pulse between said first and second electrodes at such timing with respect to said first and second pulses as to illuminate said aperture.

10. An electroluminescent device comprising a strip of piezoelectric material; first and second contacts secured to opposite surfaces of said strip adjacent one end thereof; third and fourth contacts secured to opposite surfaces of said strip adjacent the other end thereof; an electroluminescent layer placed in intimate engagement with one of said surfaces intermediate the ends of the strip and spaced apart from said contacts; a first transparent electrode covering the exposed surface of said layer; and a second electrode covering the surface of said strip remote from said layer and spaced apart from the appropriate contacts, said second and fourth contacts and said sec-

ond electrode being electrically interconnected to form a common electrode.

11. An electroluminescent device comprising a strip of piezoelectric material; first and second contacts secured to opposite surfaces of said strip adjacent one end thereof; third and fourth contacts secured to opposite surfaces of said strip adjacent the other end thereof; an electroluminescent layer placed in intimate engagement with one of said surfaces intermediate the ends of the strip and spaced apart from said contacts; a first transparent electrode covering the exposed surface of said layer; a second electrode covering the surface of said strip remote from said layer and spaced apart from the appropriate contacts, said second and fourth contacts and said second electrode being electrically interconnected to form a common electrode; first and second terminations affixed to corresponding ends of said strip, said terminations absorbing substantially without reflection any incident elastic wave supplied thereto from said strip; means to apply a first pulse between said first contact and said common electrode; means to apply a second pulse between said third contact and said common electrode; and means to apply a third pulse between said first and common electrodes.

No references cited.