Aug. 15, 1950 G. SANDERS 2,518,572

LADY'S HANDBAG

Filed Feb. 24, 1950 2 Sheets-Sheet 1

FIG. 1.

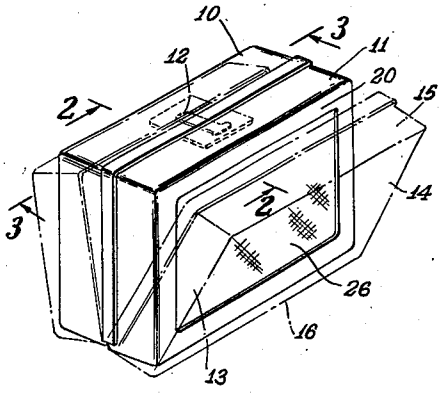

FIG. 3.

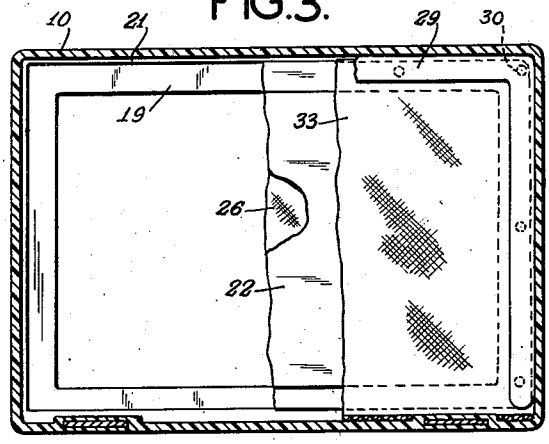

FIG. 2.

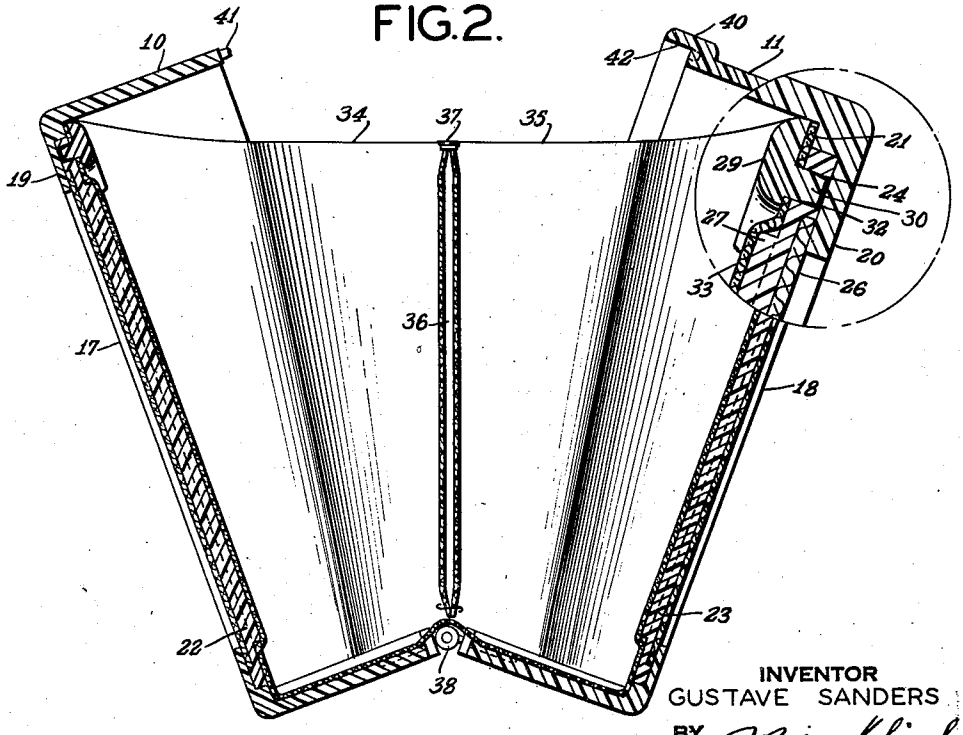

INVENTOR
GUSTAVE SANDERS
BY Irvine Kolisch
ATTORNEY

Aug. 15, 1950 G. SANDERS 2,518,572

LADY'S HANDBAG

Filed Feb. 24, 1950 2 Sheets-Sheet 2

FIG.4.

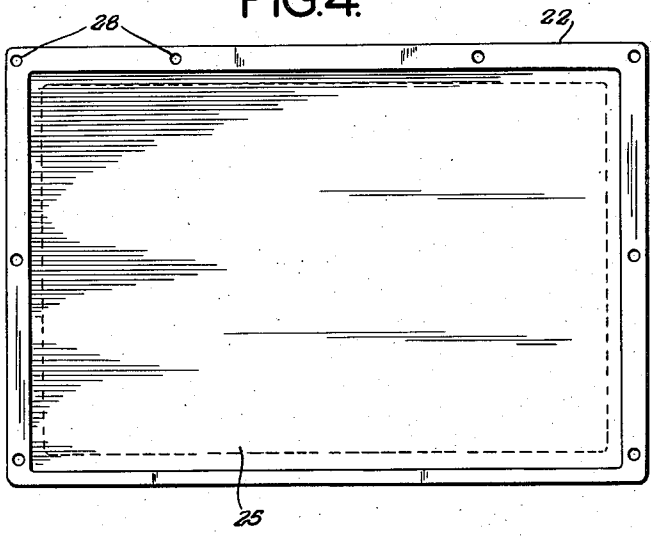

FIG.5.

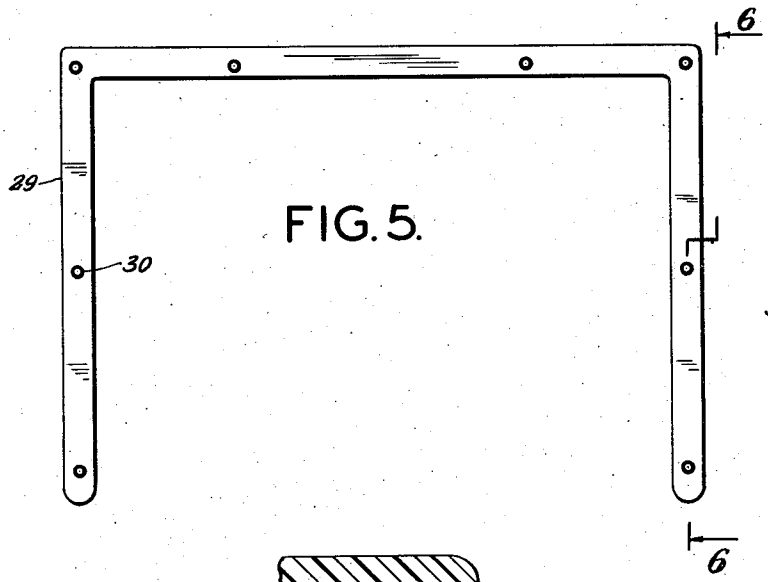

FIG.6.

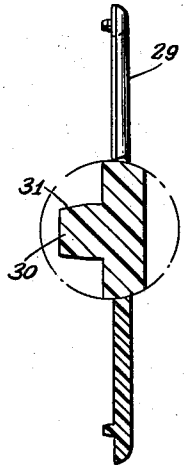

FIG.7.

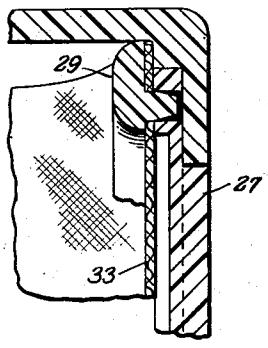

INVENTOR
GUSTAVE SANDERS
BY Pierre Kolisch
ATTORNEY

Patented Aug. 15, 1950 2,518,572

UNITED STATES PATENT OFFICE

2,518,572

LADY'S HANDBAG

Gustave Sanders, Brooklyn, N. Y., assignor to Colony Metal Co., Inc., New York, N. Y., a corporation of New York

Application February 24, 1950, Serial No. 146,100

3 Claims. (Cl. 150—28)

1

This invention relates to ladies' handbags and vanity cases.

An object of the invention is to provide an attractive handbag of rugged construction made of light material whose component parts may be produced on a mass production basis and which can be easily assembled.

According to the invention the bag comprises two frame members which, by closing upon each other, form the ultimate shape of the bag, while each of said frames has a window aperture into which panels are inserted. The appearance of these panels may be altered for decorative or ornamental purposes in accordance with style changes in handbags. Associated with said panel members is an assembly of a lining and retaining strips for securing the lining to the respective inside walls of the two frame members, the lining forming an integral pocket structure between the frames. The panels, lining and retaining strips are separately assembled and thereafter as a unit inserted in the frames to complete the handbag.

The features of the invention will become apparent from the following detailed description taken in conjunction with the drawings, in which:

Fig. 1 is a perspective view of the closed handbag with the frames shown in phantom outline in an open position;

Fig. 2 is a section on the lines 2—2 of Fig. 1 partially enlarged;

Fig. 3 is a side elevation, partly broken away on lines 3—3 of Fig. 1;

Fig. 4 is a side elevation of a panel;

Fig. 5 is a side elevation of a retaining strip member;

Fig. 6 partially enlarged is a section on lines 6—6 of Fig. 5; and

Fig. 7 is a section similar to the enlarged portion of Fig. 2 in which the panel is mounted in a reverse position within the frame.

Referring to the drawings, while the specific embodiment shown is rectangular in shape, it is only by way of example since it is intended that the invention may be embodied in bags having square, circular or other shapes.

The main body of the handbag consists of two frames 10 and 11 preferably made of molded or extruded plastic material, although other lightweight rigid materials such as aluminum, etc. may be used. Frames 10 and 11, which are substantially identical, together form the enclosure for the handbag when said frames are held together by clasp 12. Each frame has end walls 13 and 14, a top wall 15 and a bottom wall 16.

2

Window apertures 17 and 18 (Fig. 2) are provided in side walls 19 and 20 of each frame. Said side walls which are a continuation of the material of walls 13, 14, 15 and 16 serve as a base in the respective frames for supporting the assembly of the panels, lining and retaining strips. Windows 17, 18 cover a substantial surface area of their respective side walls 19, 20. A ridge 21 is provided around the inside of each frame at the juncture between outer walls 13, 14, 15 and 16 and respective walls 19 and 20 for lending rigidity to the bag while at the same time serving as a ledge for the positioning of the lining assembly within said frames.

Into each of windows 17, 18 solid panels 22, 23 may be fitted. The panels may be made of the same material as the frames or of a different material or surface design, depending upon the type of ornamentation desired. The panels are dimensioned to fit at the respective junctures of the side walls 19 and 20 and the edge 24 of ridge 21. On one side of each panel there is a recess 25, shown in dotted lines in Fig. 4, for supporting a piece of cloth or the like 26. Cloth 26 is glued or otherwise fastened to the panel and shows through window 18. The opposite face of said panel is constructed so as to have a raised surface 27, whose dimensions are such as to fit snugly within the window aperture 18 in the event that it is desired to reverse the position of panel 23, as is illustrated in Fig. 7. Thus, if panels 22, 23 are mounted as shown in Fig. 2 the effect is of a handbag appearing to be made partly of plastic (frames 10, 11) and partly of cloth (visible cloth surface 26 attached to panels 22, 23).

Spaced around three side edges of each panel there are a plurality of holes 28. A lining retaining strip 29 in the form of an inverted U and having its external dimensions determined by the inside dimensions of the walls of the frame members is provided with projecting posts 30 which are positioned at intervals corresponding to holes 28 in the panels. Posts 30 are not quite as long as holes 28 are deep. The ends of the posts are slightly tapered as at 31 to provide sufficient room for adhesive 32 (Fig. 2) that bonds the posts to the panel.

A preformed lining 33 of any suitable material and size for the frames has gussets 34, 35 and a pocket 36 held closed by a slide fastener 37 or the like. Holes are provided along the edges in the lining corresponding to holes 28 in the panels. The gussets form the lining into a closed compartment divided in two by pocket 36. Naturally other pockets, compartmentation, etc. may be provided for carrying accessories,

Opposite sides of the lining are securely clamped between a panel and retaining strip and then this assembly is fitted into the handbag frames as follows:

Strip **29** is placed on a flat surface and one end of lining **33** is placed over the strip with posts **30** projecting through the holes in the edge of the lining. Panel **23** is next placed over the lining with posts **30** registering with holes **28** in the panel. A drop or so of suitable adhesive **32** is next put in each hole and acts to bond the posts to the panel. The same procedure is repeated for the other end of the lining to clamp it between a panel and retaining strip. After the lining has been attached in the above described manner, the panels are secured into their respective frames, as shown in Fig. 2, by means of a suitable adhesive **32** placed between the inside edges of the walls surrounding the windows and the corresponding opposed surfaces of panel **22, 23.** Frames **10** and **11** are joined to one another along their bottom edges by hinges **38.**

If it is desired to fill recess **25** with a decorative inlay of cloth or other suitable material, the inlay is placed into the recess before assembling into the frame. If no inlay is desired, the panels may be arranged as shown in Fig. 7 with raised panel surface **27** facing out.

A bead **40** extends around one edge of frame **11** and assists in aligning the two frames. A tongue **41** projecting from frame **10** is inserted into slot **42** in bead **40** when the handbag is closed and gives rigidity to the structure, particularly when opening and closing the bag.

If desired, a carrying handle or strap may be attached in any suitable manner to the walls of the frame members.

From the foregoing it will be evident that according to the invention it is possible to produce inexpensively and in quantities ladies' handbags that are durably constructed and in addition have style features that will make them attractive to purchasers as well as to manufacturers.

To those skilled in the art the invention will suggest many changes and alterations not here explicitly recited. However, it is intended to limit the invention only by the appended claims.

What I claim is:

1. A handbag comprising two frame members; each of said frames comprising a top, bottom, side and end wall; means for securing said frames to one another; a lining forming a compartment between said frames; in each of said frames a ridge along the inside of the frame at the junction of the walls to give greater rigidity to the frame; a panel abutting one side of said ridge, said panel having a plurality of holes around its edges; a U-shaped retaining strip adapted to rest upon the other side of said ridge; projections in said retaining strip adapted to be inserted and secured in the holes in the panel, whereby the fabric lining is clamped between the panel and retaining strip.

2. A lady's handbag comprising two rectangular frame members of rigid plastic material; hinges for securing said frames to each other along one edge; each of said frames comprising a top, bottom, side and end wall; a rectangular window aperture in the side wall covering a substantial surface area of the side wall; a rectangularly shaped panel of rigid plastic material cemented to the inside edges of said window to cover the aperture; a recessed portion in said panel for supporting a piece of cloth or the like; a plurality of holes around three edges of said panel; a U-shaped retaining strip; posts projecting from said strip registering with said holes in the panel; adhesive means for holding the posts in said holes; a fabric lining extending between each of said frames to form a compartment, said fabric lining having holes along its edges corresponding to the holes in the panels whereby the lining is clamped between each panel and its corresponding retaining strip.

3. The handbag according to claim 1 and in which said panel has a raised portion adapted to fit snugly in said aperture.

GUSTAVE SANDERS.

REFERENCES CITED

The following references are of record in the file of this patent:

UNITED STATES PATENTS

Number	Name	Date
1,485,172	Dowell	Feb. 26, 1924
1,598,991	Strauss	Sept. 7, 1926
1,789,438	Hiering	Jan. 20, 1931
2,017,445	Peterson	Oct. 15, 1935
2,218,665	Tamoschat	Oct. 22, 1940
2,218,666	Tamoschat	Oct. 22, 1940
2,393,487	Storch	Jan. 22, 1946
2,425,540	Kaplan	Aug. 12, 1947