Office de la Propriété Intellectuelle du Canada
Un organisme d'Industrie Canada

Canadian Intellectual Property Office
An agency of Industry Canada

CA 2505574 C 2010/01/12

(11)(21) **2 505 574**

(12) **BREVET CANADIEN**
CANADIAN PATENT

(13) **C**

(86) Date de dépôt PCT/PCT Filing Date: 2004/01/17
(87) Date publication PCT/PCT Publication Date: 2004/08/05
(45) Date de délivrance/Issue Date: 2010/01/12
(85) Entrée phase nationale/National Entry: 2005/05/10
(86) N° demande PCT/PCT Application No.: EP 2004/000329
(87) N° publication PCT/PCT Publication No.: 2004/065136
(30) Priorité/Priority: 2003/01/24 (CH2003 0098/03)

(51) Cl.Int./Int.Cl. *B42F 13/26* (2006.01)

(72) Inventeur/Inventor:
HORN, HANS JOHANN, CH

(73) Propriétaire/Owner:
ESSELTE LEITZ GMBH & CO KG, DE

(74) Agent: BORDEN LADNER GERVAIS LLP

(54) Titre : MECANISME DE RELIURE A ANNEAUX
(54) Title: RING BINDER MECHANISM

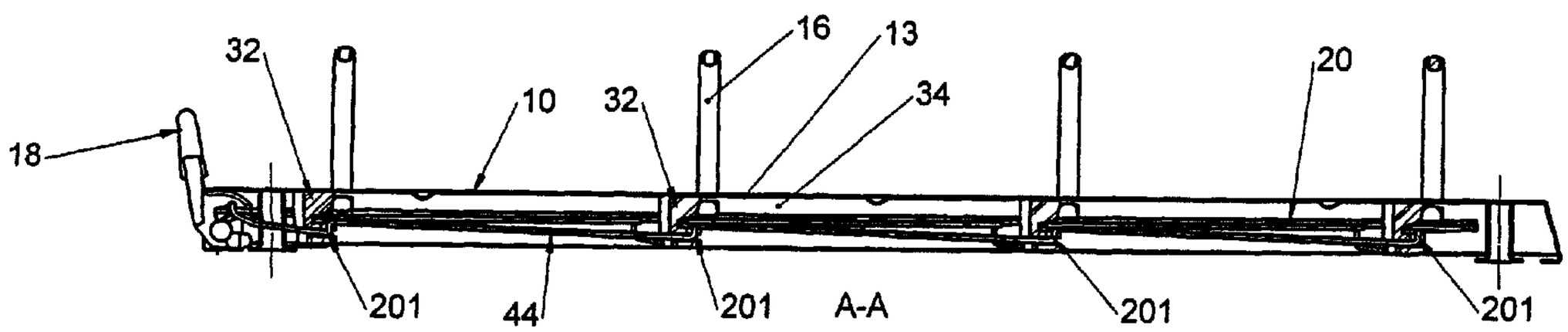

(57) Abrégé/Abstract:
The invention relates to a ring binder mechanism for housing perforated documents. The ring binder mechanism comprises a housing (10) with spring elastically flexible housing flanks (28). Two carrier rails (20) are arranged within the housing (10), which may be pivoted towards each other by the spring action of the housing flanks (28) in the manner of an elbow joint in the region of the longitudinal edges thereof which face each other. At least two half rings (16), which pair-wise form a ring (14), are rigidly connected to the support rails (20) at defined longitudinal separations from each other. At least two locking elements (32), operated by means of an actuating element (18) and a tie rod (44), are further provided, which engage in a free space (34), formed between the carrier rails (20) and a housing wall (13), in the locked position, with locking of the pivoting movement of the carrier rails (20) and which release the pivoting path about the joint axis (22) in the opened state, whereby the locking elements (32) are pre-tensioned in the closing direction by the action of a closing spring (36). According to the invention, only one single tie rod (44) is provided, the tie rod comprising several dogs (201), each of which is provided for cooperating with one of the locking elements (32).

Abstract

The invention relates to a ring binder mechanism for housing perforated documents. The ring binder mechanism comprises a housing (10) with spring elastically flexible housing flanks (28). Two carrier rails (20) are arranged within the housing (10), which may be pivoted towards each other by the spring action of the housing flanks (28) in the manner of an elbow joint in the region of the longitudinal edges thereof which face each other. At least two half rings (16), which pair-wise form a ring (14), are rigidly connected to the support rails (20) at defined longitudinal separations from each other. At least two locking elements (32), operated by means of an actuating element (18) and a tie rod (44), are further provided, which engage in a free space (34), formed between the carrier rails (20) and a housing wall (13), in the locked position, with locking of the pivoting movement of the carrier rails (20) and which release the pivoting path about the joint axis (22) in the opened state, whereby the locking elements (32) are pre-tensioned in the closing direction by the action of a closing spring (36). According to the invention, only one single tie rod (44) is provided, the tie rod comprising several dogs (201), each of which is provided for cooperating with one of the locking elements (32).

RING BINDER MECHANISM

Description

The invention concerns a ring binder mechanism with a housing having a C-shaped or U-shaped cross-section, with elastic mounting flanks which can be bent open for receiving two carrier rails, of which the inward facing longitudinal edges lie against each other forming a linkage axis, and of which the outward facing longitudinal edges engage in mounting grooves of the mounting flanks, and with at least two half-rings rigidly connected with the carrier rail in a defined longitudinal separation from each other, extending through openings in a housing wall and pairwise forming themselves into a ring, wherein the carrier rails, taking along the half rings, are limitedly pivotable relative to each other about the longitudinal pivot axis between an open position and a closed position while overcoming the spring force produced by the bending open of the mounting flanks, and wherein at least two locking elements are provided, activatable via an operating element and a tie rod, which when in the locked position engage in a free space formed between the carrier rails and the housing wall thereby blocking the pivot movement of the carrier rails, and when in the open position free the linkage axis to pivot, wherein the locking elements are pre-tensioned in the closed direction by a locking spring.

A ring binder mechanism of this type is known (WO 01/81099), in which each locking element is provided with a tie rod associated with the actuating element, each tie rod having an integrated locking spring. The tie rod must accordingly be made of a springy material. Further to be considered is that,

in the known ring binder mechanisms, in practical embodiments with more than two rings, these are provided however with only two locking elements. The use of more than two locking elements is desirable, for example, in mechanisms with three or more rings, but this is neither disclosed nor enabled.

Beginning therewith, it is the task of the present invention to improve the ring binder mechanism of the type described in the introductory section in such a manner that more than two locking elements can be employed.

For solving this task, the characteristics set forth in Patent Claim 1 are proposed. Advantageous embodiments and further developments of the invention can be seen from the dependent claims.

The inventive solution is comprised essentially therein, that the tie rod includes multiple dogs (or catches or engagement elements or bends), each of which is respectively associated with one locking element.

In accordance with a preferred embodiment of the invention, the tie rod is comprised of a piece of wire extending essentially parallel to the linkage axes, wherein the dogs are bends or offsets on the tie rod.

Each locking element is preferably, provided with its own locking spring, independent from the tie rod, wherein the locking spring may be in the form of a leg spring. For simplification of assembly, it is basically also possible,

that only one locking spring is provided, engaging the end of the tie rod opposite to the actuating element.

According to a further preferred embodiment of the invention, each locking element includes a receptacle for one of the dogs of the tie rod, via which it is in operative association therewith.

A further preferred embodiment of the invention envisions that at least one of the locking elements is a pivot element, wherein the at least one locking element is held pivotable on one of the two carrier rails and/or on the housing.

A ring binder mechanism with four rings can accordingly be equipped with four locking elements, wherein the locking elements are mounted pivotably upon one of the two carrier rails and each locking element can be associated with a locking spring in the form of a leg spring. The locking elements can be provided with wedge-shaped locking surfaces, which cooperate or engage with the carrier rails in the locked position. By the individual spring pressure of the locking elements in the closing direction, it is advantageously achieved, that each locking element in the closed position exercises an optimal closing force upon the carrier rails, which creates a high holding force on the rings.

When using only one locking spring on the end of the tie rod opposite to the actuating element, the receptacles on the locking elements for the dogs of the tie rod must be so designed, that the pivotable ring elements can be pivoted by

the dogs both in the opening direction as well as in the closing direction.

In the following, the invention will be described in greater detail on the basis of the embodiment shown in the figures. There is shown:

Fig. 1a-c	a side view, a top view and an end view of a ring binder mechanism with four rings in closed position;
Fig. 2a-c	a bottom view of the ring binder mechanism, an enlarged section of Fig. 2a and a section along line A-A of Fig. 2a;
Fig. 3a and b	a perspective representation of the ring binder mechanism from above and from below without housing;
Fig. 3c and d	respectively an enlarged section in the area of the third ring of Fig. 3a and b;
Fig. 4a	a perspective representation of the locking element in the form of a pivot element;
Fig. 4b	a section of the tie rod in the area of a dog in perspective representation;
Fig. 4c	a perspective representation of a section of the two carrier rails in the area of a ring in closed position;

Fig. 5a — a side view of the elements in operative engagement: operating element, tie rod and locking elements;

Fig. 5b-c — a top view and a side view of the tie rod;

Fig 6a-b — two sectional representations of the ring binder mechanism according to Fig. 2a in first and second phases of opening;

Fig. 7a-b — a perspective representation of the ring binder mechanism in open position, as well as a detail A from Fig. 7a;

Fig. 8a-b — a bottom view of the ring binder mechanism in perspective representation as well as detail B from Fig. 8a.

The binder ring mechanisms represented in the drawings are above all intended for receiving loose-leaf, holed sheets, for example, writing material or printed products.

The binder ring mechanism is comprised essentially of a housing, multiple half-rings **16** provided longitudinally spaced from each other and extending through openings **12** in the housing wall **13** and pairwise forming a ring **14** with complementary half-rings, as well as an operating lever **18** for opening and closing the rings. Each of the half-rings **16** of one of the rings **14** is rigidly secured to one of the two carrier rails **20,** which on their inward edges - the

longitudinal edges facing each other - lie against each other thereby forming a linkage axis **22**, and which with their outer edges - the longitudinal edges **24** facing away from each other - engage in inward facing mounting grooves **26** stamped into the housing flanks **28**. The carrier rails **20** are introduced into the housing in such a manner, that they can assume two detent positions, one open and one closed. The housing functions as a spring element, which retains the half-rings **16** in their open position and in their closed position. The carrier rails **20** thereby have the function of an elbow lever spring tensioned on the outer edges **24**. Therewith, the carrier rails **20** can be limitedly pivoted against each other about their linkage axis **22**, taking along the half-rings **16** between the open position and the closed position by overcoming the spring force produced by the bending apart of the housing flanks **28**.

In addition, in the illustrative embodiment each ring **14** is provided with a locking element **32** pivotable relative to the housing **10** and to the carrier rails **20**, which in the closed position projects into the free space **34** formed between the carrier rails **20** and the housing wall **13** with blocking of the pivot path of the carrier rails **20** and in the open position frees the pivot path about the linkage axes **22**. In the illustrative embodiment, each locking element **32** in the form of a pivot element is associated with its own locking spring **36**.

One special feature of the invention is comprised therein, that all locking elements **32** are operated via a common tie rod **44**. The tie rod **44**, here in the form of a piece of wire, exhibits for this purpose four dogs **201**, each of which are

respectively associated with one locking element **32**. The locking elements **32** in the form of pivot elements are supplementally acted upon in the locking direction by the force of a closing spring **36** (Fig. 2a and 2b). The closing springs **36** are in the form of leg springs, of which the flanks are supported on the one side against the housing flank **28** and on the other side against the locking element **32** (Fig. 2b). The locking element **32** exhibits for this purpose a spike **204** for the reception of the locking spring **36**. In an operating position, the locking element **32** is, besides this, also held pivotably by a projection along the axis **205** in a bearing receptacle **206** on one of the carrier rails **20** (Fig. 3d and 4a). On the locking element **32**, there is further provided a receptacle **203** for the associated dog **102** of the tie rod **44**. In the illustrated embodiment the dogs **201** are designed as bends or offsets **202** on the tie rod **44**. In order that the dogs **201** are also secured in the transverse direction against sliding out, an abutment plate **207** is formed on the respective locking elements **32** (see Fig. 4a).

The locking elements **32** are pre-tensioned under the influence of the associated locking springs **36** in the direction of the locking position (see Fig. 3a through 3d). The opening of the rings **14** occurs by displacement or sliding of the tie rod **44** in its longitudinal direction, wherein the actuating lever **18** is depressed. Therein, the locking elements **32** are pivoted against the force of the closing springs **36** about the axis **205** relative to the carrier rails **20** in their open position. The locking element **32** penetrates or extends thereby into the guide through-hole **54** and frees the carrier rails **20** for movement about their pivot axis **22** (represented in dashed

lines in Fig. 2b). In the course of the opening process, upon further depressing of the actuating element **18**, an opening outrigger or prong **40** formed on the actuating element extends from below against the carrier rails **20** and presses these upwards thereby overcoming the spring force produced by the housing flanks **28**, until the carrier rails **20** abut against the housing wall **13**. Thereby, the half rings **16** are pivoted in their open position.

During the closing process, the actuating element **18** is pressed upwards. Thereby, the carrier rails **20** are pivoted downwards by the closing outrigger or prong **42** about their linkage axis **22** overcoming the spring force produced by the housing flanks **28** past the locking elements **32**, until the free space **34** results. In the last phase of the closing process, the locking elements **32** are displaced under the influence of the closing springs **36** and, with taking along the tie rod **44** and the actuating lever **18**, automatically into their locking position (Fig. 3a through 3d). For further disclosure, in this context, reference is made to the embodiments in WO 01/81099.

The kinematic chain, which is responsible for the release, or as the case may be, the locking of the carrier rails **20**, is comprised accordingly of the following elements: actuating element **18**, tie rod **44**, four locking elements **32** with locking springs **36**.

The invention was explained above on the basis of an illustrative embodiment, in which each individual locking element **32** is provided with a locking spring **36**. It is

basically possible, that the tie rod **44** with its dogs **202**, both in the locking direction as well as in the opening direction, is form-fittingly coupled with the locking elements **32** in the form of pivot elements. Thus, there is the possibility that only one locking spring is provided pre-tensioned in the locking direction and engaging against the tie rod **44**. Thereby, the expense of assembly associated with the insertion of the locking elements **32** and the locking spring is reduced, without having to accept any functional disadvantages.

The invention further concerns a binder with a ring binder mechanism of the above-described type provided on the spine or back.

CLAIMS:

1. A ring binder mechanism with a housing having a C- or U-shaped cross-section with spring-elastic bendable flanks for two carrier rails, which carrier rails on their inward facing longitudinal edges lie against each other forming a linkage axis and with their outward facing longitudinal edges engage in mounting grooves in the housing flanks, and with at least two half-rings longitudinally spaced apart from each other and rigidly connected with the carrier rails, which half-rings extend through openings in a housing wall and pairwise form a ring, wherein the carrier rails are limitedly pivotable relative to each other about the linkage axis between an open position and a closed position upon overcoming the spring forced produced by the bending open of the housing flanks, while taking along the half-rings, and wherein at least two locking elements are provided to be operable via an actuating element and a tie rod which locking elements, in the closed position, protrude into a free space formed between the carrier rails and the housing wall blocking the pivot movement of the carrier rails and, in the open position, free the pivot movement of the carrier rails about the linkage axis, wherein the locking elements are pre-tensioned in the direction of the closed position under the influence of a closing spring, thereby characterized, that the tie rod includes a number of engaging elements, each of which respectively being associated with one of the locking elements.

2. A ring binder mechanism according to claim 1, wherein the tie rod is a piece of wire extending essentially parallel to the linkage axis.

3. A ring binder mechanism according to claim 2, wherein the engaging elements are dogs.

4. Ring binder mechanism according to claim 3, wherein the dogs are bends or offsets on the tie rod.

5. A ring binder mechanism according to any one of claims 1 to 4, wherein each ring element is provided with its own locking spring independent of the tie rod.

6. A ring binder mechanism according to claim 5, wherein the locking springs are leg springs.

7. A ring binder mechanism according to any one of claims 1 to 4, wherein only one locking spring is provided, which engages the end of the tie rod opposite to the actuating element.

8. A ring binder mechanism according to any one of claims 1 to 7, wherein each locking element includes a receptacle for the corresponding element of the tie rod and is in operative association therewith.

9. A ring binder mechanism according to any one of claims 1 to 8, wherein at least one of the locking elements is a pivot element.

10. A ring binder mechanism according to claim 9, wherein at least one locking element is held pivotably on one of the two carrier rails and/or on the housing.

11. A binder with a ring binder mechanism according to any one of claims 1 to 10.

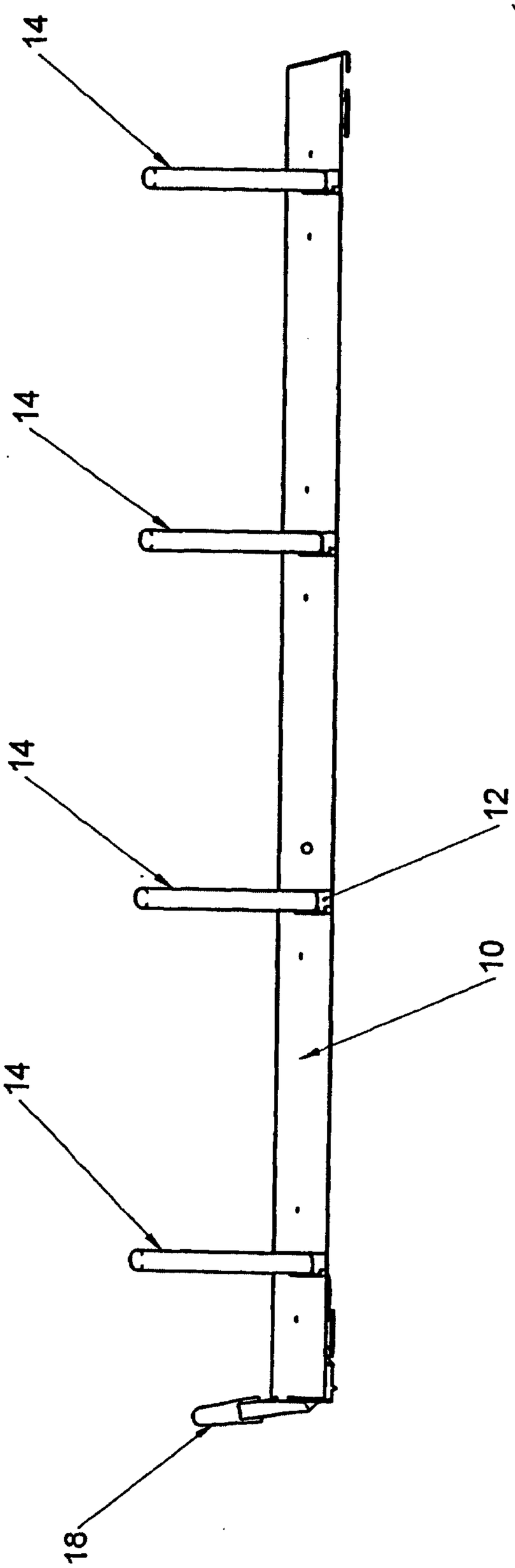

Fig. 1a

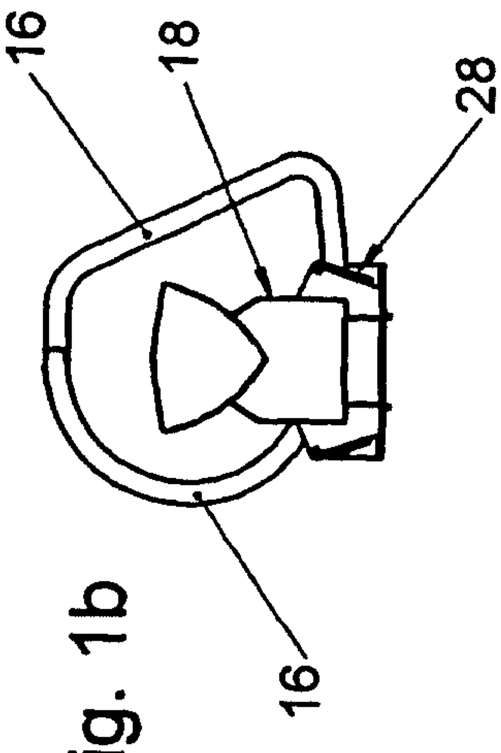

Fig. 1b

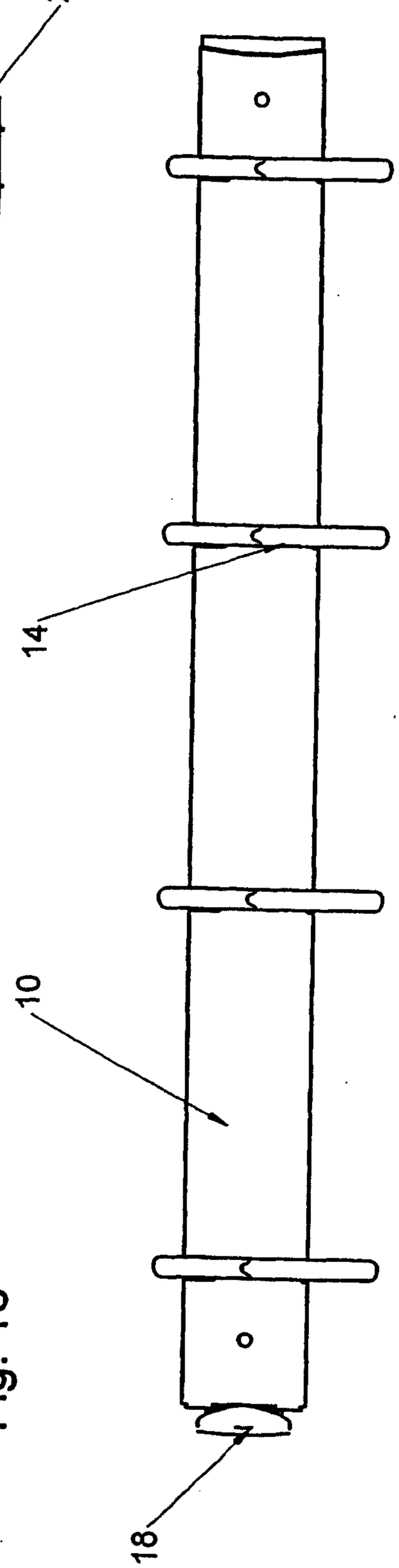

Fig. 1c

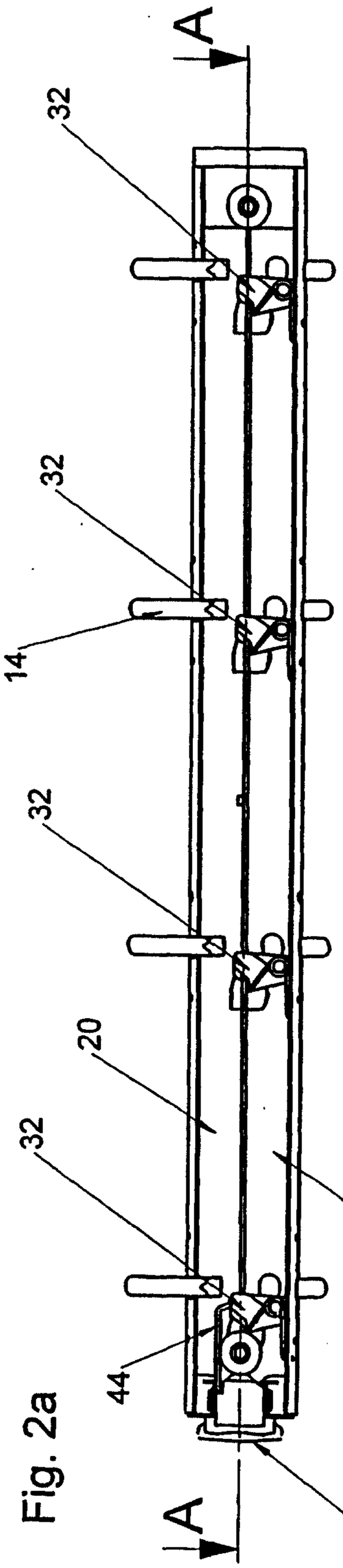

Fig. 2a

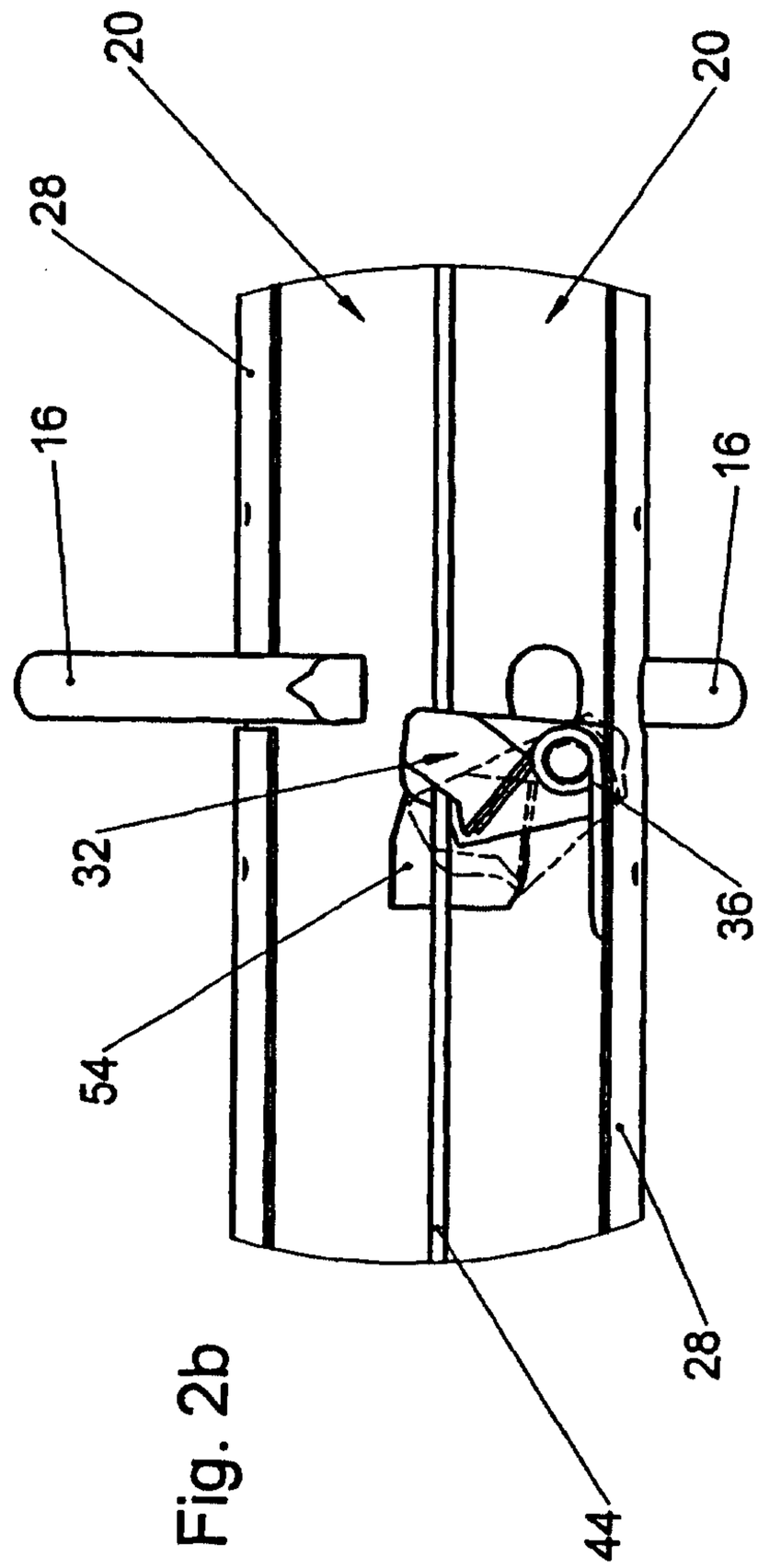

Fig. 2b

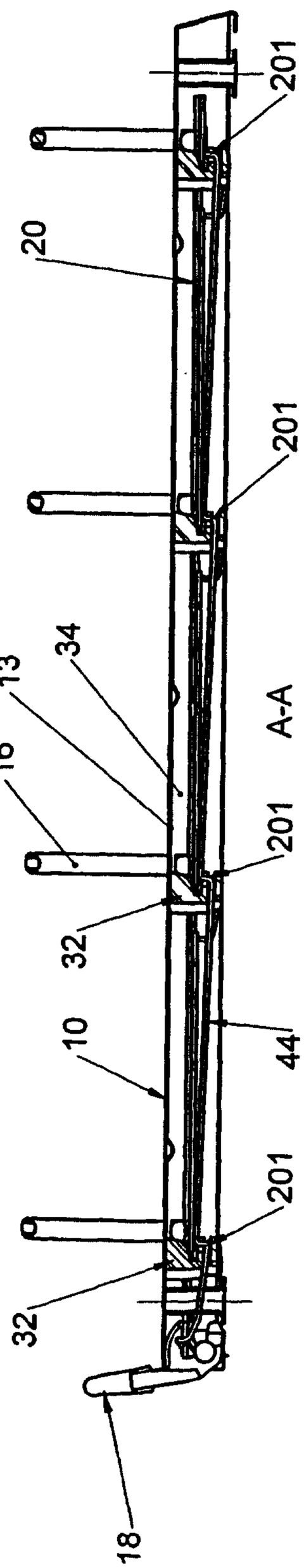

Fig. 2c

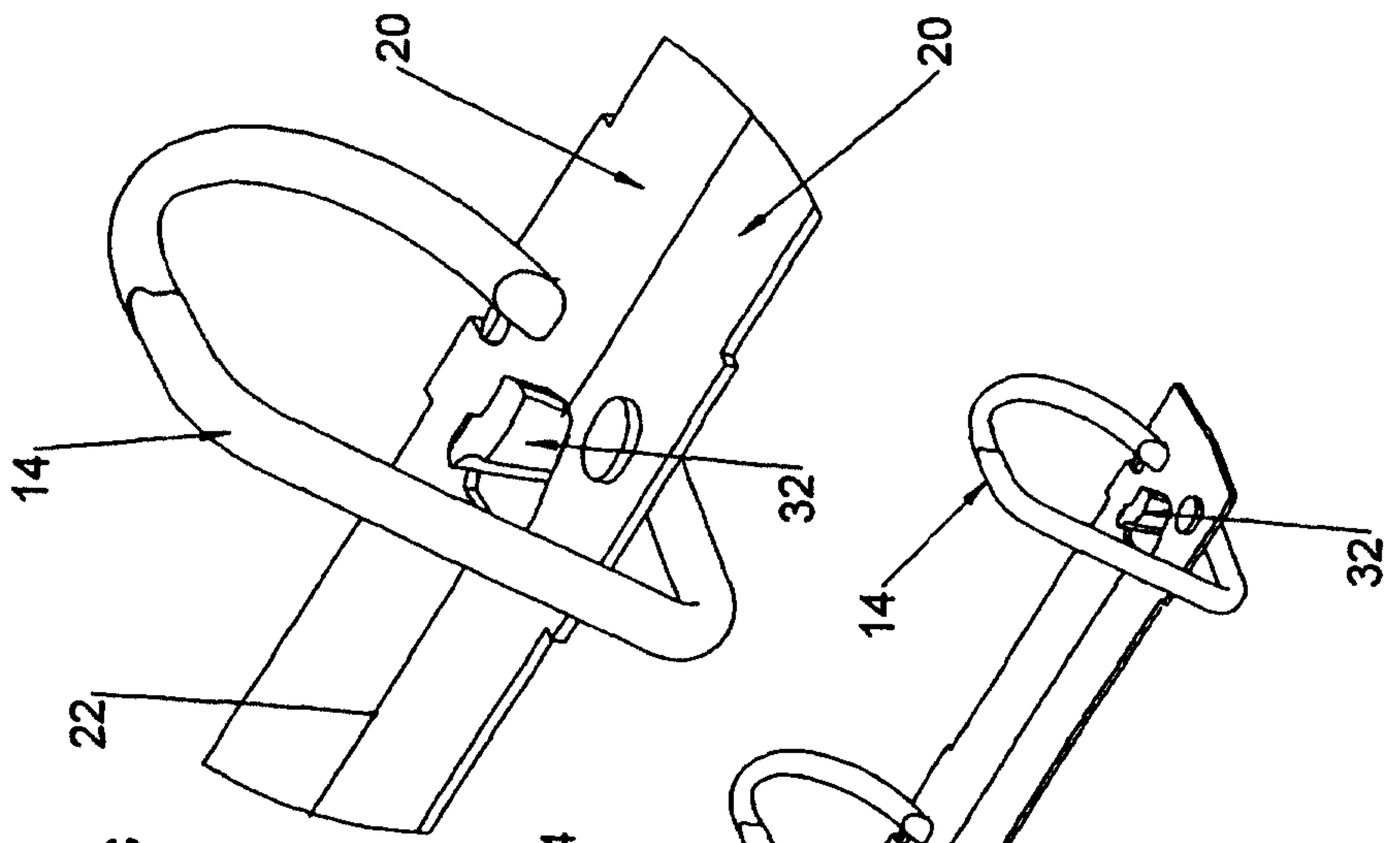

Fig. 3c

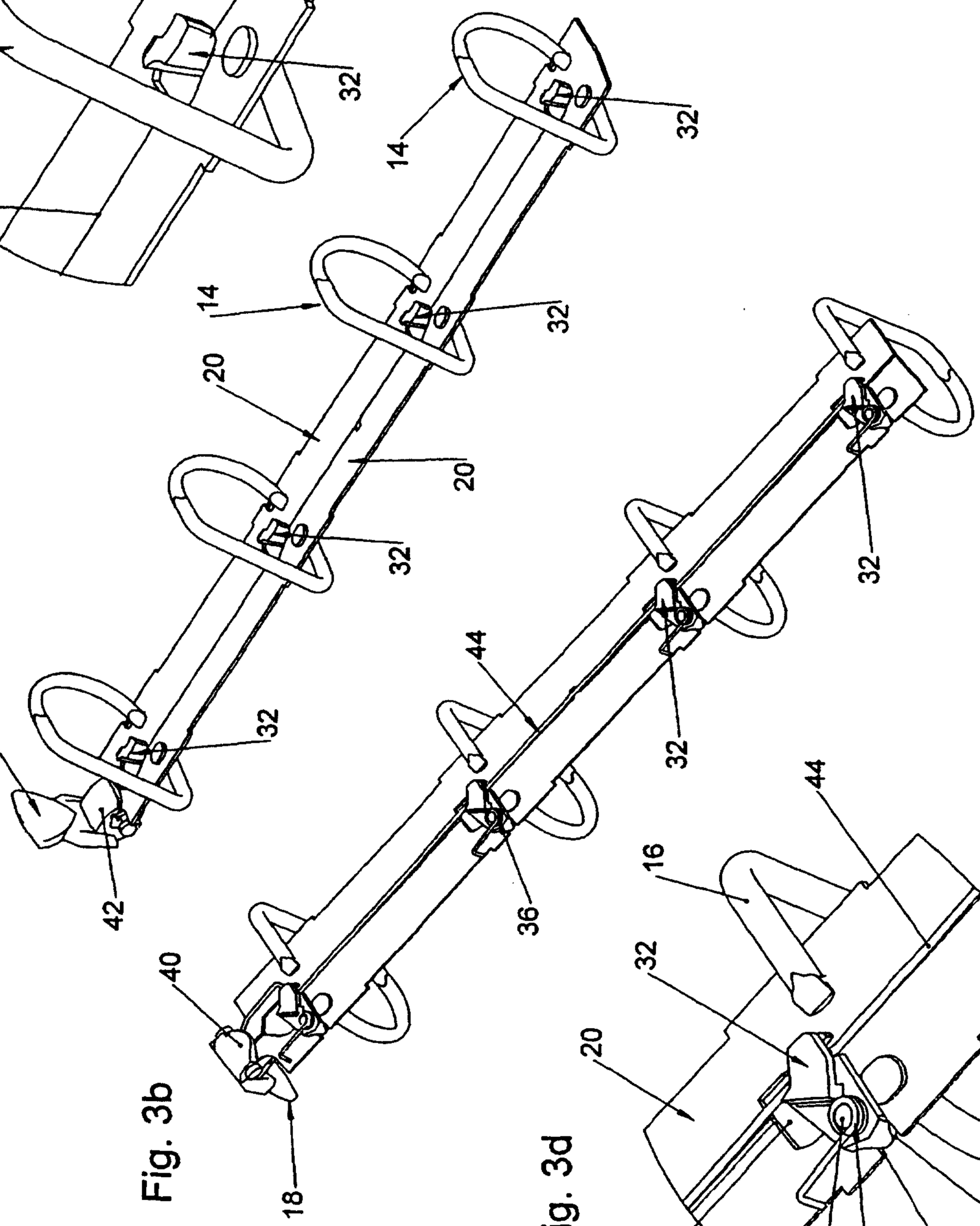

Fig. 3a

Fig. 3b

Fig. 3d

Fig. 4a

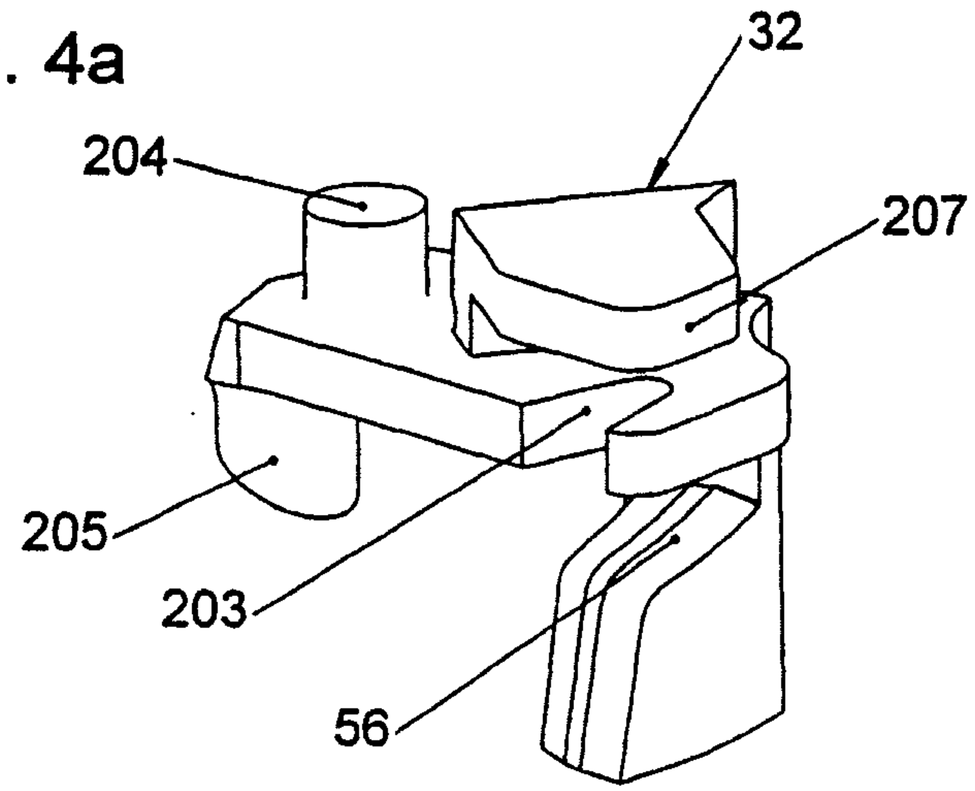

Fig. 4c

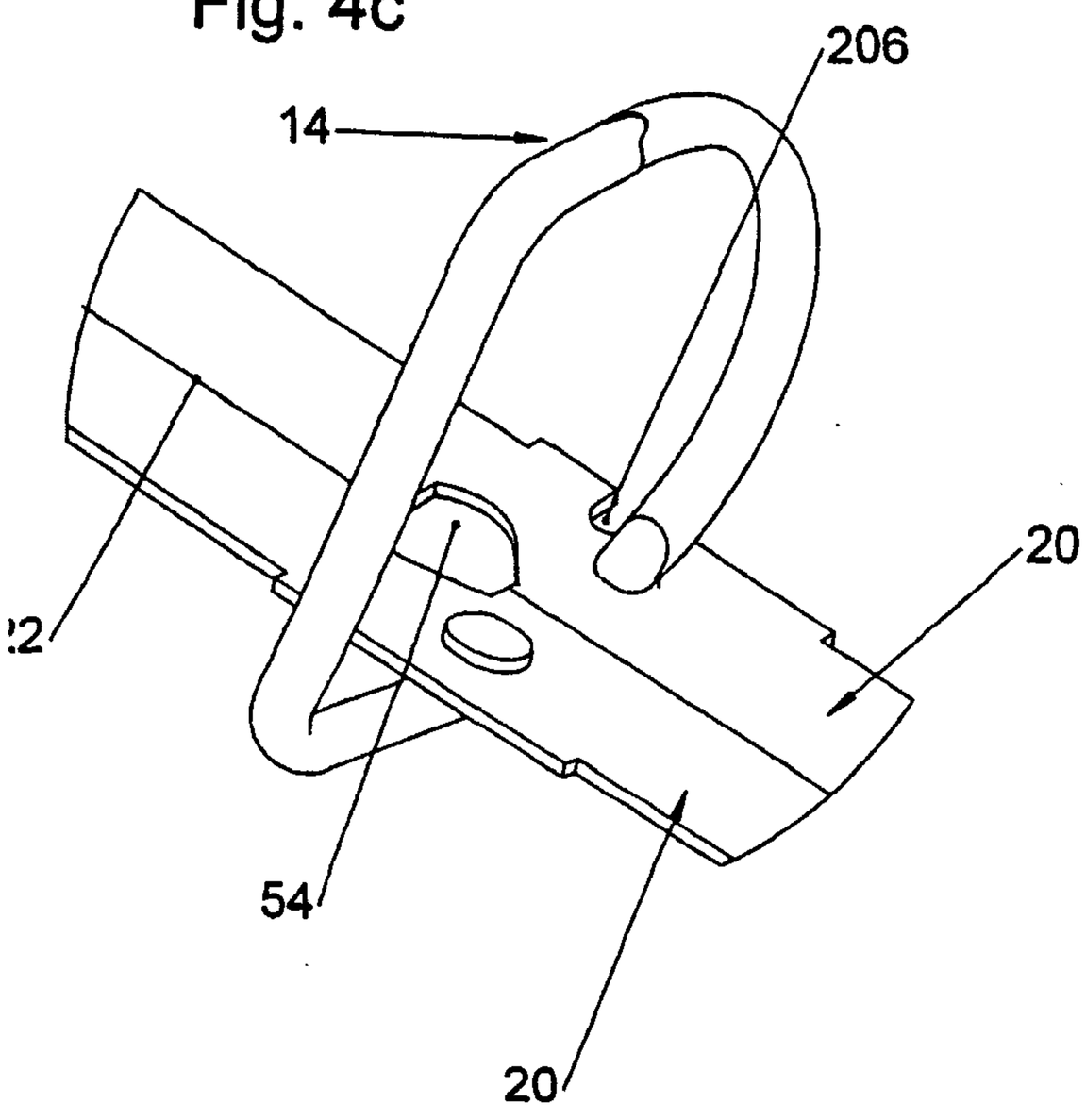

Fig. 4b

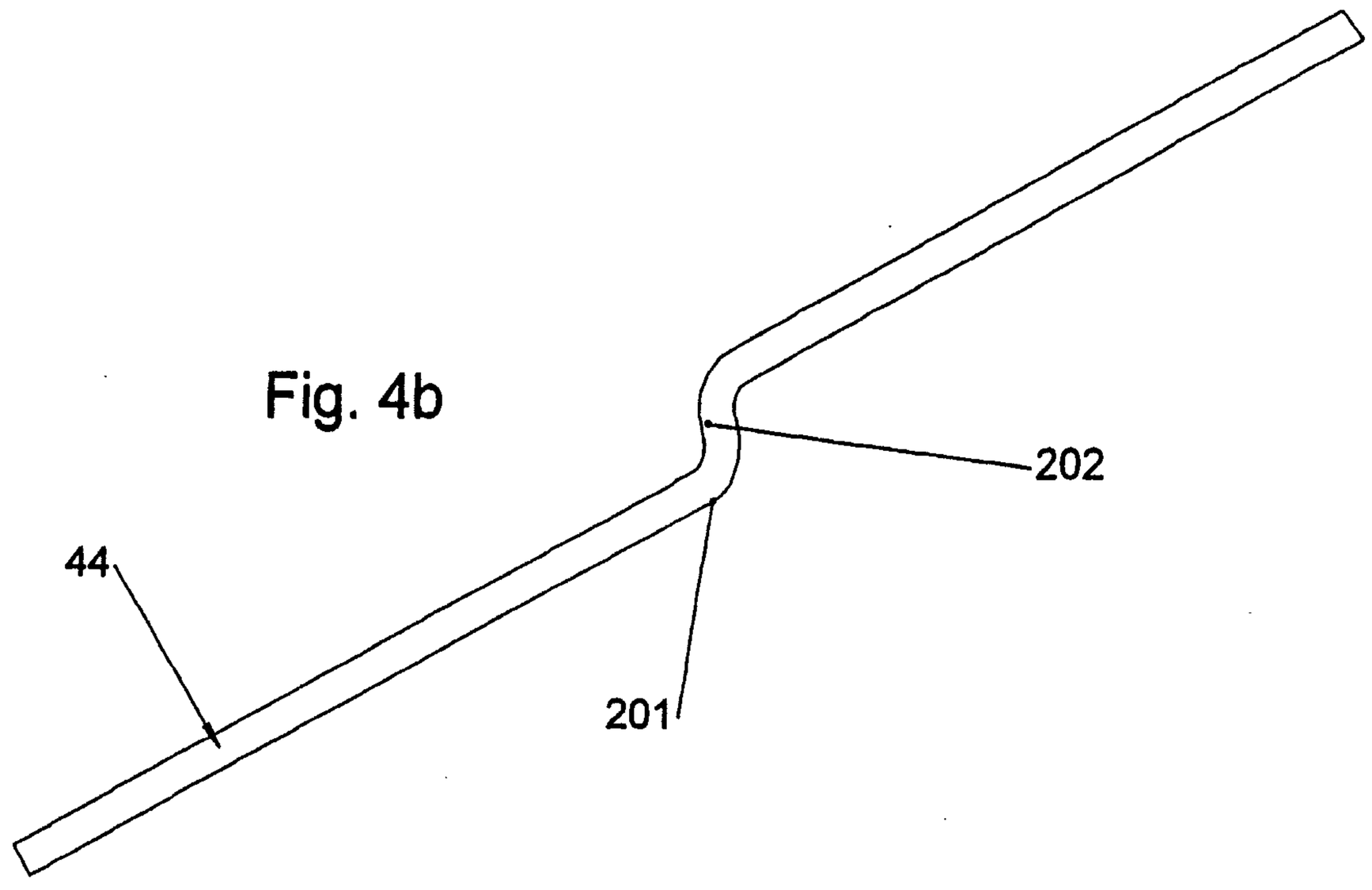

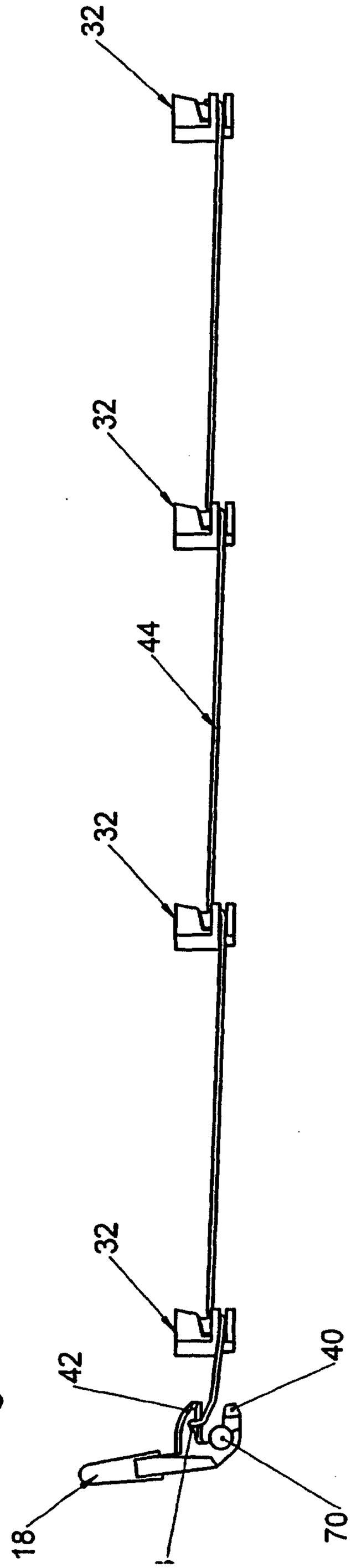

Fig. 5a

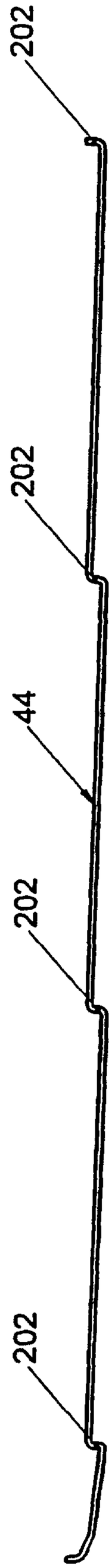

Fig. 5b

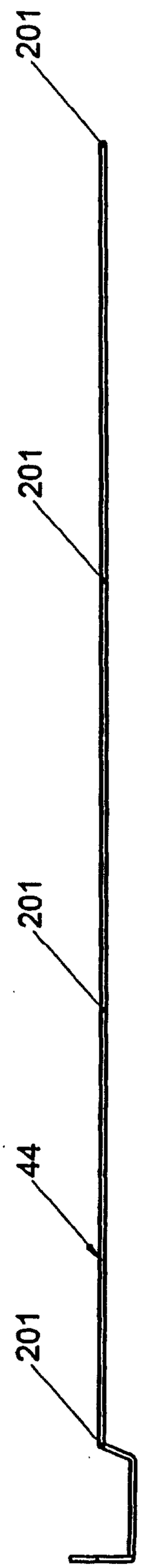

Fig. 5c

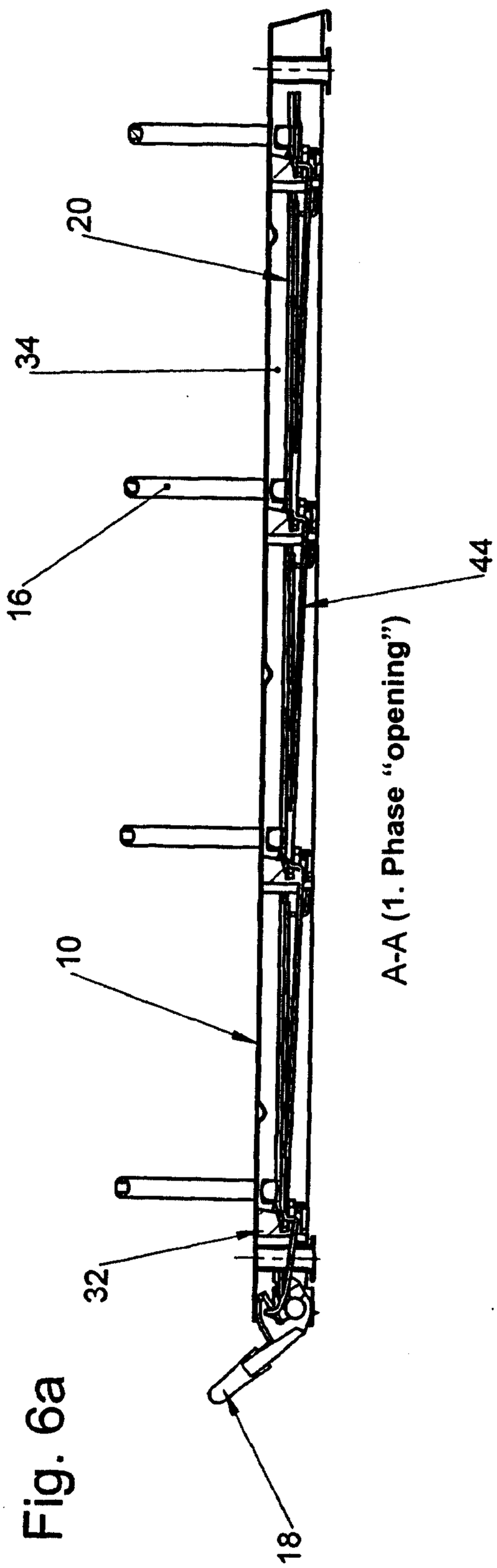

A-A (1. Phase "opening")

Fig. 6a

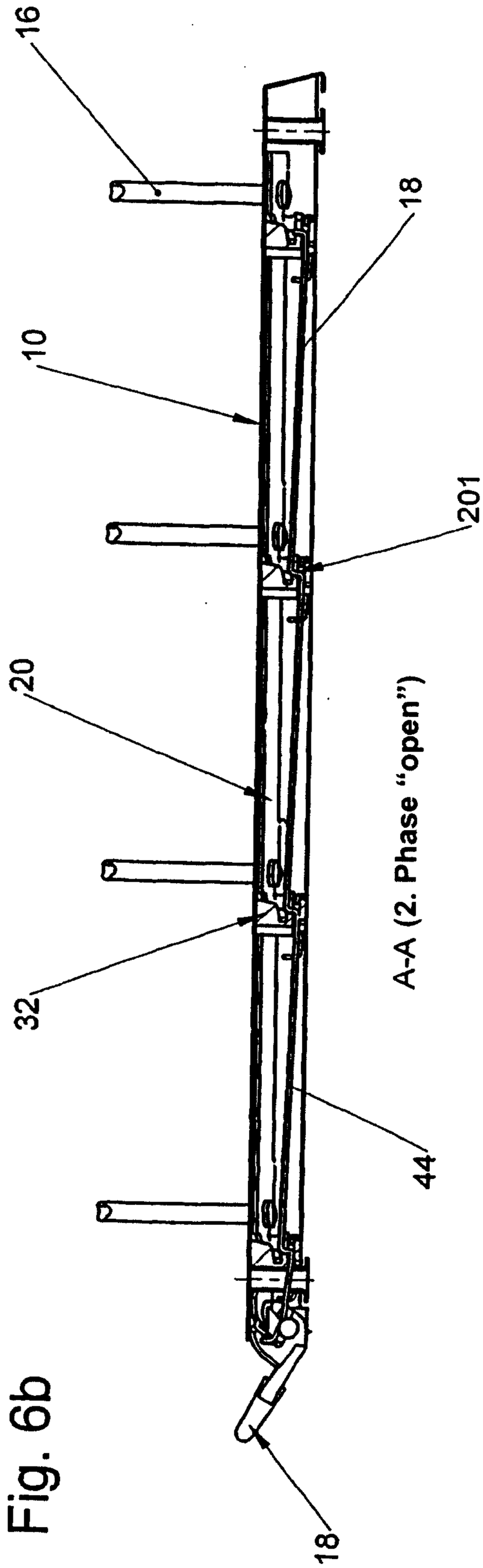

A-A (2. Phase "open")

Fig. 6b

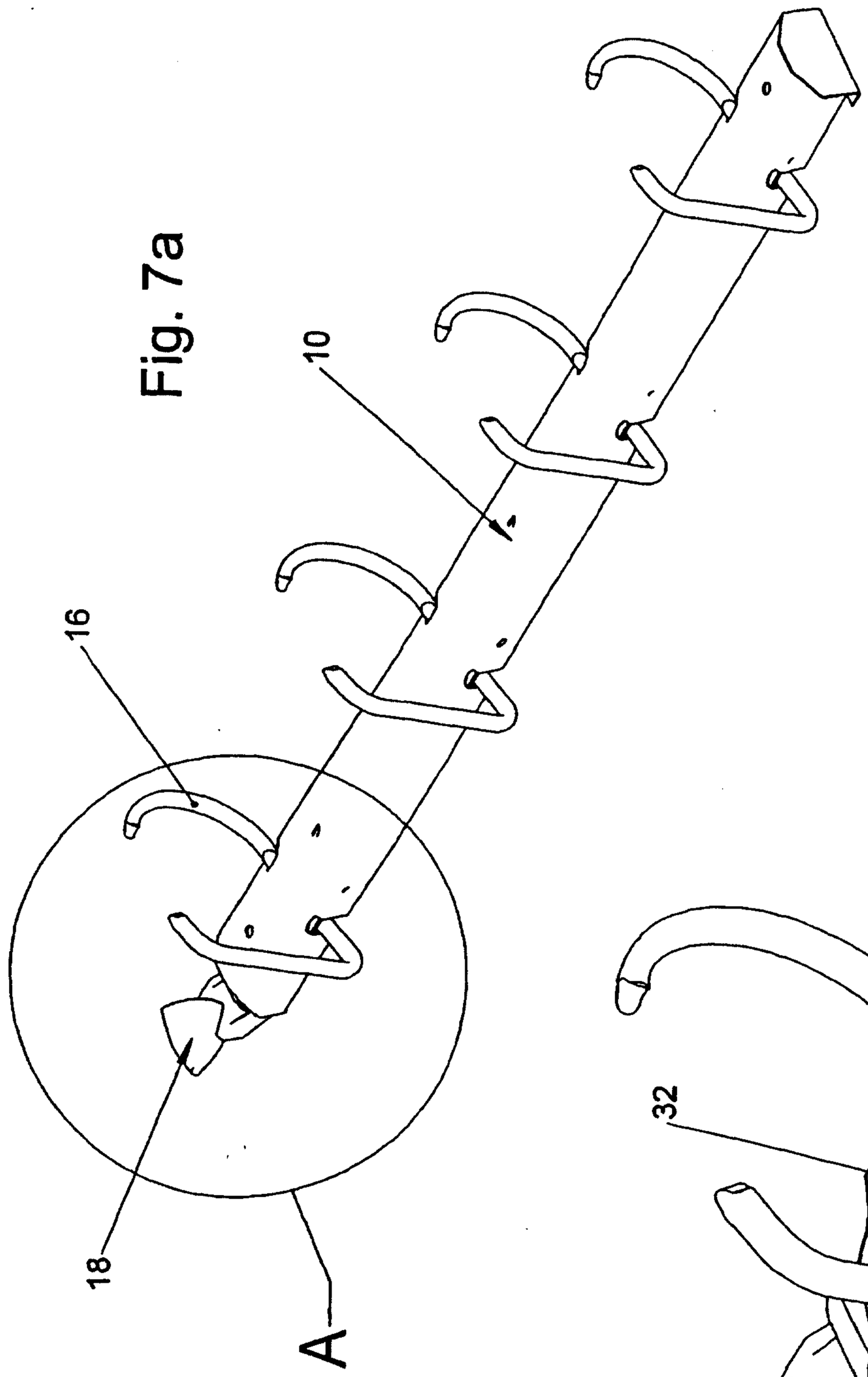

Fig. 7a

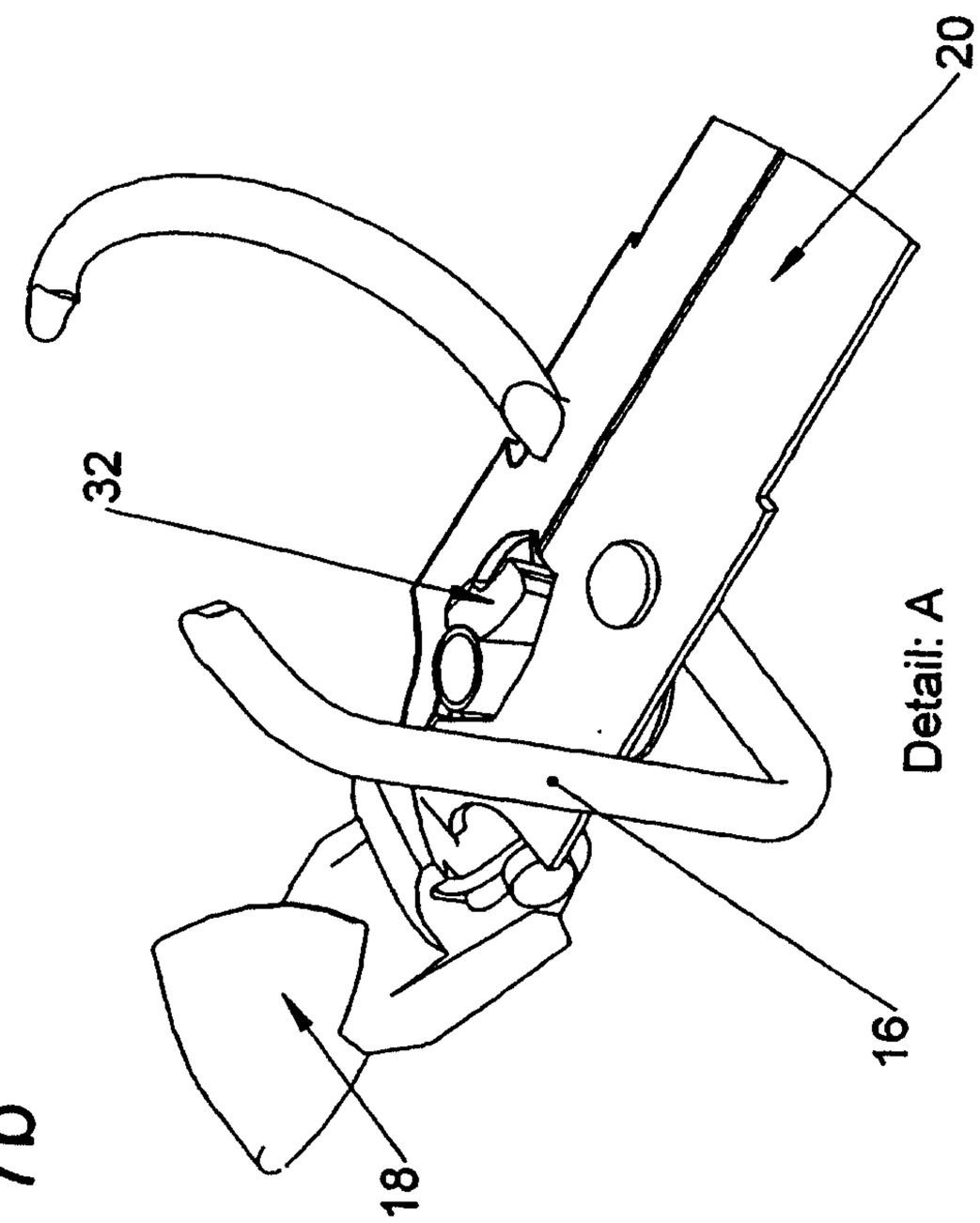

Fig. 7b

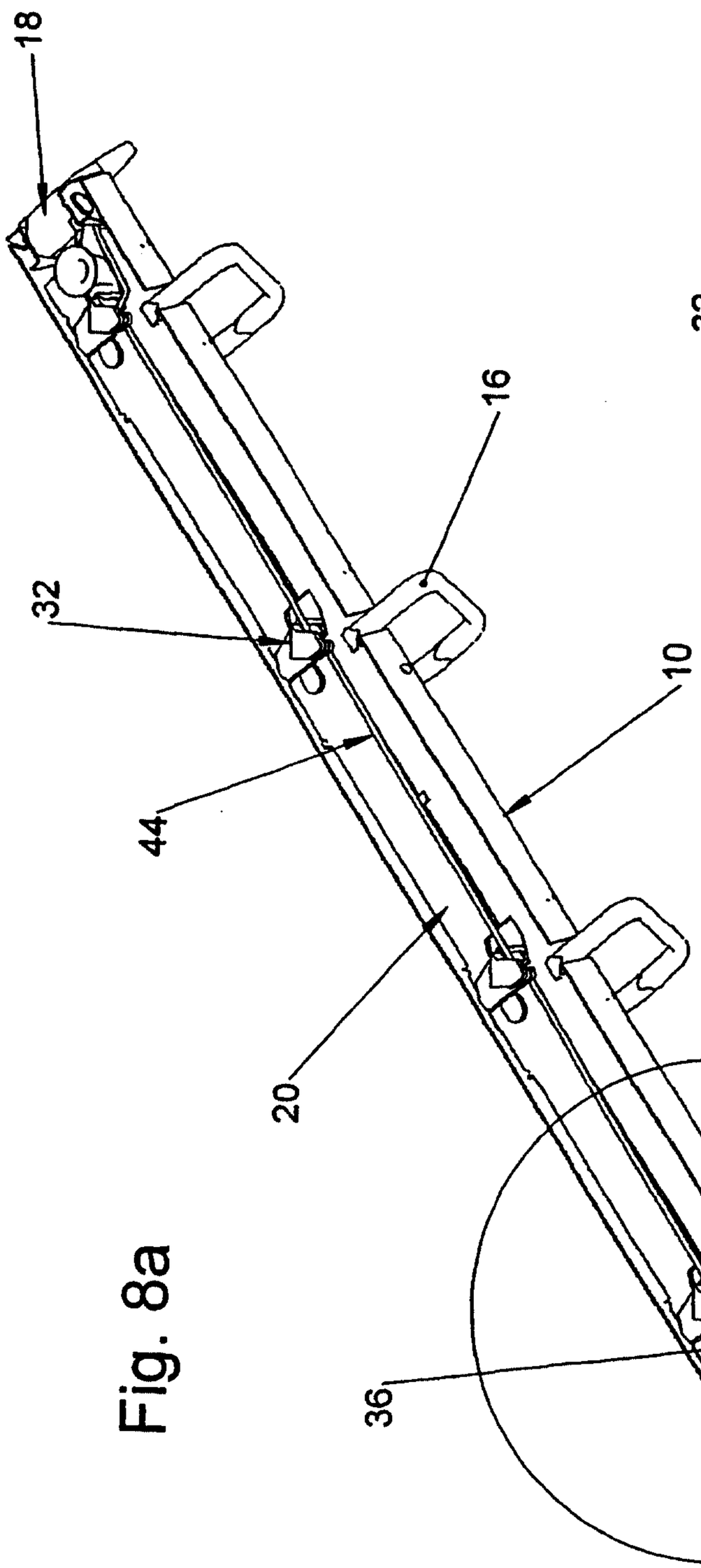

Fig. 8a

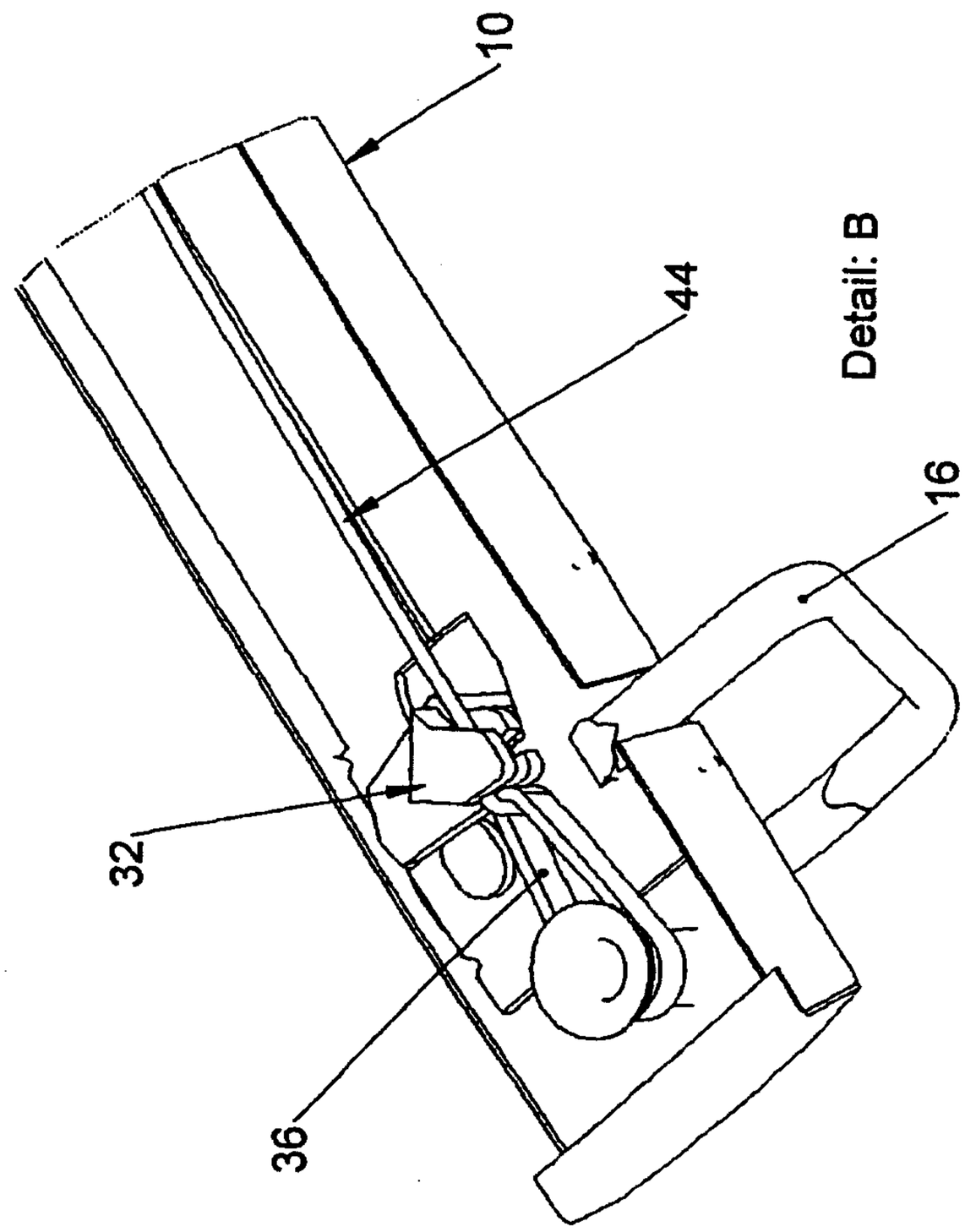

Fig. 8b

Detail: B

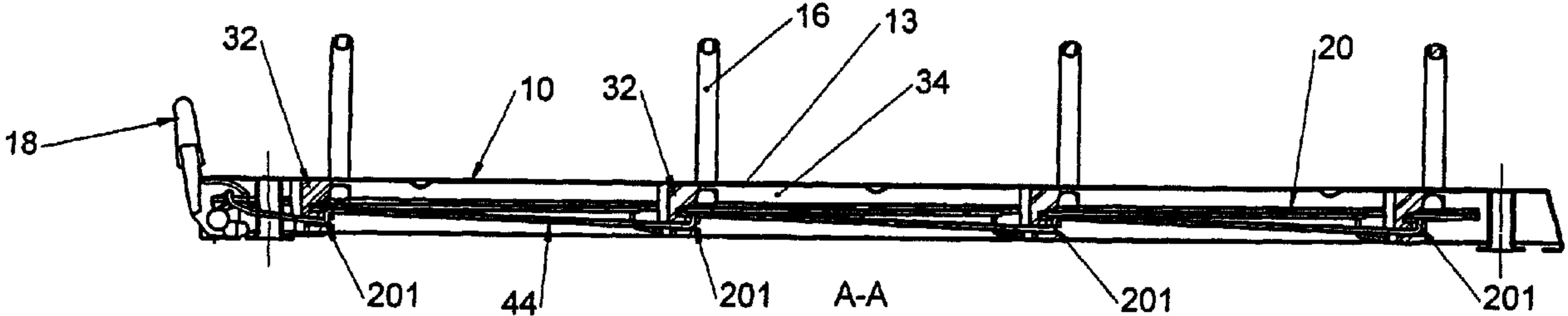
32
16
13
20
10
32
34
18
201
44
201
A-A
201
201