Feb. 21, 1933. H. C. MAGNUS 1,898,676

WASHING MACHINE

Filed April 7, 1932 2 Sheets-Sheet 1

Fig. 1.

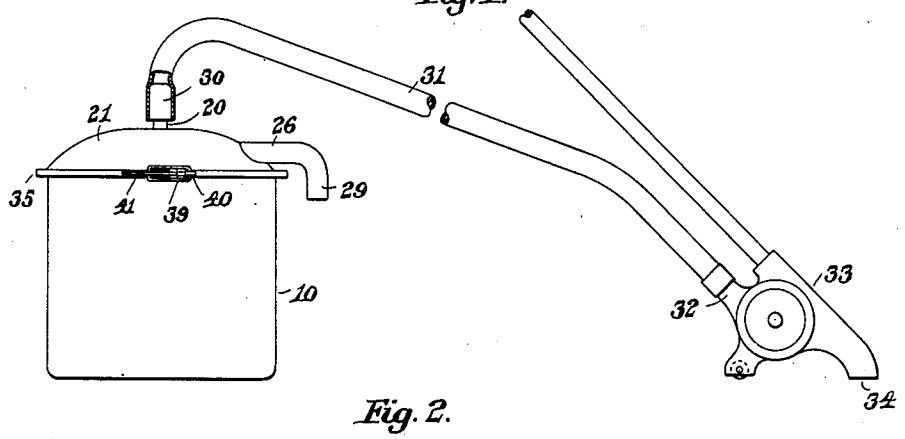

Fig. 2.

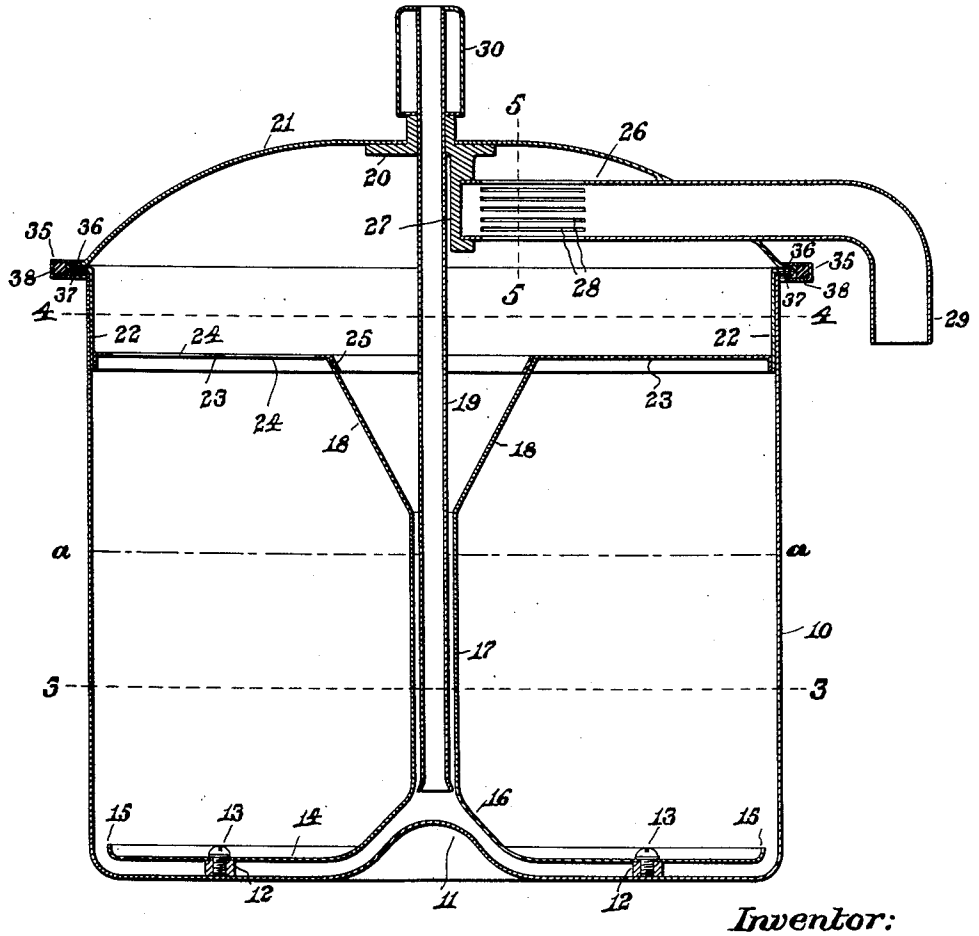

Inventor:
Henry C. Magnus,
by Walter E. Lombard,
Atty.

Feb. 21, 1933. H. C. MAGNUS 1,898,676

WASHING MACHINE

Filed April 7, 1932 2 Sheets-Sheet 2

Fig. 4.

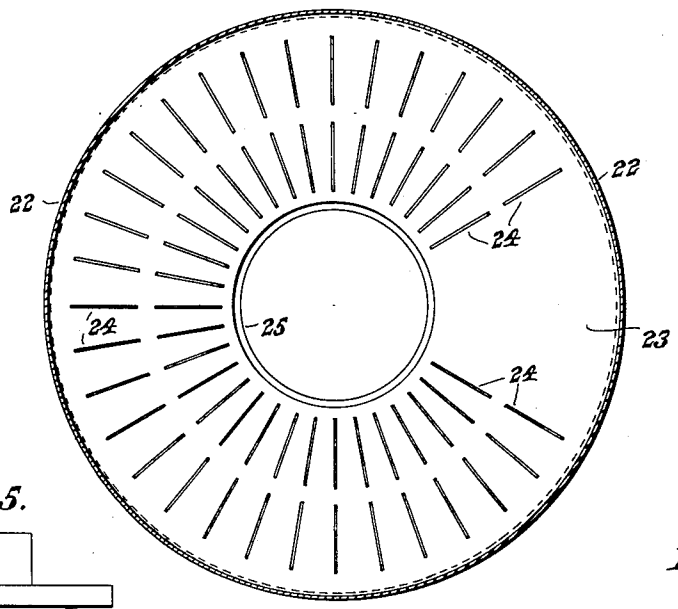

Fig. 5.

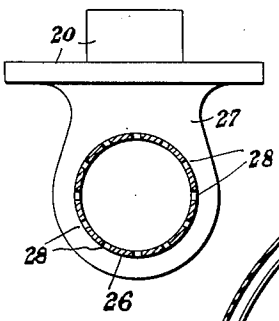

Fig. 7.

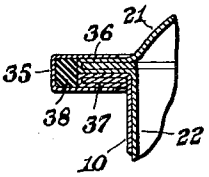

Fig. 3.

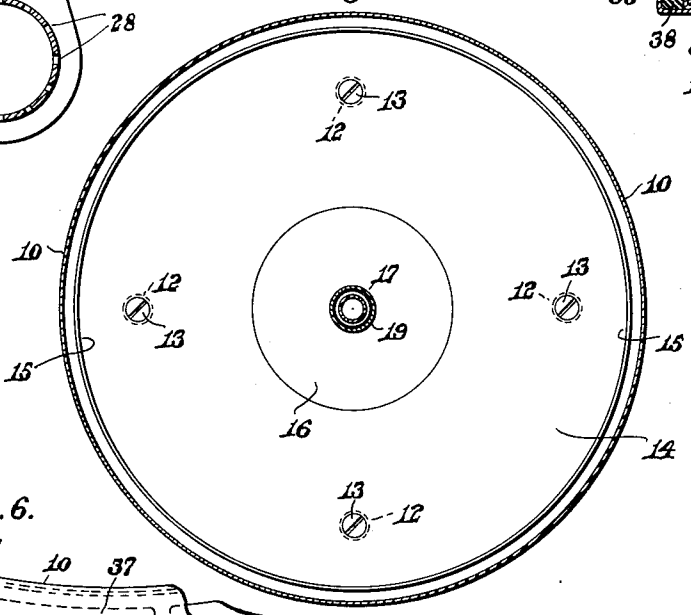

Fig. 6.

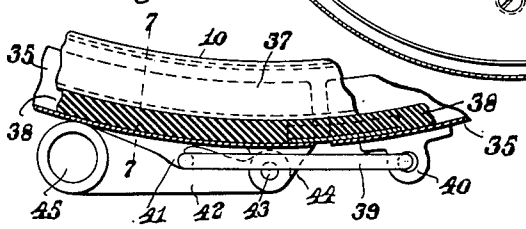

Inventor:
Henry C. Magnus,
by Walter E. Lombard,
Atty.

Patented Feb. 21, 1933 1,898,676

UNITED STATES PATENT OFFICE

HENRY C. MAGNUS, OF JAMAICA PLAIN, MASSACHUSETTS

WASHING MACHINE

Application filed April 7, 1932. Serial No. 603,707.

This invention relates to washing machines and has for its object the production of a small portable machine of this class which may be connected by a pipe to the outlet of a vacuum cleaner, thus utilizing the motor of said vacuum cleaner to force air under pressure into a receptacle containing a cleansing agent and the clothes or other articles to be cleaned.

This object is attained by the mechanism illustrated in the accompanying drawings.

For the purpose of illustrating the invention, one preferred form thereof is illustrated in the drawings, this form having been found to give satisfactory and reliable results, although it is to be understood that the various instrumentalities of which the invention consists can be variously arranged and organized, and the invention is not limited to the precise arrangement and organization of these instrumentalities as herein shown and described except as required by the scope of the appended claims.

Of the drawings

Figure 1 represents an elevation of a washing machine embodying the principles of the present invention connected to a vacuum cleaner of usual construction.

Figure 2 represents a vertical section of the washing machine.

Figure 3 represents a horizontal section of same on line 3, 3, on Fig. 2.

Figure 4 represents a horizontal section of the cover, on line 4, 4, on Fig. 2.

Figure 5 represents a section of the outlet pipe on line 5, 5, on Fig. 2.

Figure 6 represents a longitudinal section of the two ends of the split ring for securing the cover to the main receptacle and showing the means for clamping said ends together, and

Figure 7 represents a transverse section on line 7, 7, on Fig. 6.

Similar characters indicate like parts throughout the several figures of the drawings.

In the drawings, 10 is receptacle adapted to contain a washing fluid, the bottom of said receptacle having an upwardly extending semi-cylindrical projection or hump 11 preferably formed by curving the bottom wall upwardly as shown in Fig. 2.

The bottom wall of the receptacle is provided with upwardly extending bosses 12 to which is secured, by screws 13, a support 14, the outer edge of which is curved upwardly as at 15 slightly removed from the side wall of said receptacle.

This support 14 is spaced from the bottom wall of receptacle and in the center has a cone-shaped portion 16 extending over and spaced from the projection 11.

At the upper end of the cone-shaped portion 16 is a cylindrical extension 17 which is funnel shaped at its upper end, as shown in Fig. 2 at 18.

Within the cylindrical extension 17 is an air inlet tube 19, the lower end of which flares outwardly and is adjacent to but removed from the bottom projection 11.

The upper end of the tube 19 is secured to and projects through a disk 20 forming part of a cover 21 having a cylindrical wall 22 fitted into and closing the upper end of the receptacle 10.

To the lower end of the cylindrical wall 22 of the cover 21 is secured a horizontal baffle plate 23 having a plurality of narrow radial slots 24 formed therein.

This baffle plate is annular, surrounds the funnel 18, and has a flange 25 extending over the upper edge thereof, all as shown in Fig. 2.

Secured to the cover 21 at a level considerably above the baffle plate 23 is an air outlet pipe 26, the inner end of which rests in a socket in a downwardly extending ear 27 on the disk 20 and is closed thereby.

The inner end of the pipe 26 is provided with a plurality of peripheral slits 28 extending lengthwise thereof, and the outer end of this pipe 26 projects through the cover 21 and is bent downwardly as at 29, see Fig. 2.

Surrounding and secured to the projecting upper end of the tube 19 is a cylindrical casing 30 adapted to be disposed in one end of a flexible pipe 31, the opposite end of which is adapted to be secured to a device provided with means for forcing air under pressure

through the tube 19 into the bottom of the receptacle when filled with a washing fluid to substantially the level *a*, *a* on Fig. 2.

Preferably the outer end of the flexible pipe 31 is secured to the outlet 32 of any usual electrically driven vacuum cleaner 33.

When the vacuum cleaner 33 is used in connection with the washing machine it is so disposed that clean air will be admitted to the inlet 34 and the washing machine may be disposed in a sink or bathtub which will receive any overflow of soap suds discharged from the outlet pipe 29.

Of course, if desired, the receptacle may be disposed in any suitable place with a pail or pan beneath the outlet pipe 29.

The support 14 is secured to the bottom of the receptacle 10 in order to prevent same being lifted by the force of the air being admitted to the space beneath said support.

For the same reason the cover 21 must be clamped in some manner to the top of the receptacle to prevent its displacement during the washing operation.

Any suitable means may be used for this purpose, one convenient means being disclosed in the drawings.

This means consists of a split ring 35 which is U-shape in cross section and is adapted to fit over a flange 36 on the cover 21 and a flange 37 on the receptacle 10, a packing ring 38 within the ring 35 being forced against the outer edges of said flanges 36, 37.

When this split ring 35 is positioned its ends are locked together by a suitable locking means.

The means shown in the drawings consists of a link 39 pivoted at 40 to one end of ring 35 with the outer end of said link disposed in a notch 41 in a lever 42 pivoted at 43 to an ear 44 on the other end of ring 35.

The outer end of lever 42 is provided with a finger hole 45 by which said lever may be moved about its pivot 43.

When the cover 21 is thus secured to the receptacle there is a hermetical seal between the two and none of the washing fluid can escape from the covered receptacle.

When air under pressure passes through the tube 18 it will contact with the projection 11 and will be deflected thereby in every direction beneath the support 14 to the side walls of the receptacle, and then upwardly.

The clothes or other articles to be cleansed having been placed upon the support 14, the washing fluid within the receptacle will be swashed about by the force of the air under pressure admitted to the receptacle and said fluid will be forced into contact with, and in most cases through, the articles on support 14.

The stirring of the fluid by the air will form soap suds which will assist materially in the cleansing operation.

Any suds created and passing upwardly through the slots 24 in the baffle plate 23 will be broken up in the passage through said slots and will return to the bottom of receptacle through the tubular extension 17.

By this means a constant circulation is created and this circulation is not only up and down but also around the tubular extension 17.

The air admitted to the receptacle passes upwardly through the slots 24 in the baffle plate 23, and then through the slits 28 into the discharge pipe 26, passing outwardly from the projecting end 29 thereof.

After repeated circulation of the washing fluid an excessive amount of soap suds is created sometimes and this excess in suds may pass through the slits 28 and pipe 26, 29 into any suitable receptacle.

The slots 24 in the baffle plate 23 are omitted therein immediately beneath the outlet pipe as shown in Fig. 4, and this omission of the slots 24 at this point materially assists in the circulation of the washing fluid.

While this washing machine is intended primarily for the cleansing of clothes, it is obvious that it could be utilized also for cleansing dishes and other articles placed upon the support.

It will be noted that the air is forced into the receptacle by a motor or some other household appliance, thus dispensing with installation of a separate motor on the washing machine and thereby reducing the cost of the washing machine.

This makes a very effective washing machine particularly adapted for use in small apartments and one which may be constructed at a minimum cost, and of very light weight.

It is believed that the operation and many advantages of the invention will be understood readily without further description.

Having thus described my invention, I claim:

1. In a washing machine, the combination of a cylindrical receptacle adapted to contain a washing fluid; a discal support therein positioned slightly above the bottom thereof and having a central tubular extension extending upwardly therefrom and having a funnel shaped upper end, the lower end of said extension opening into the fluid beneath said support; a horizontal slotted baffle plate surrounding the upper end of said extension having an annular flange fitted to said funnel shaped end; and an air inlet tube within said tubular extension and extending nearly to the bottom thereof.

2. In a washing machine, the combination of a cylindrical receptacle adapted to contain a washing fluid; a discal support therein positioned slightly above the bottom thereof and having a central tubular exten-

sion extending upwardly therefrom, the lower end of said extension opening into the fluid beneath said support; a horizontal slotted baffle plate surrounding and resting upon the upper end of said extension; an air inlet tube within said tubular extension and extending nearly to the bottom thereof; and a cover for said receptacle provided with an air outlet above said baffle plate and through the top of which the upper end of said tube extends.

3. In a washing machine, the combination of a receptacle adapted to contain a washing fluid; a support therein positioned slightly above the bottom thereof and having a central tubular extension extending upwardly therefrom, the lower end of said extension opening into the fluid beneath said support; a horizontal slotted baffle plate surrounding and resting upon the uper end of said extension; an air inlet tube within said tubular extension and extending nearly to the bottom thereof, said tube being spaced from the wall of said extension; a cover for said receptacle through the top of which the upper end of said tube extends; and a horizontally disposed tubular air outlet secured to and extending from said cover above said baffle plate.

4. In a washing machine, the combination of a receptacle adapted to contain a washing fluid; a support therein positioned slightly above the bottom thereof and having a central tubular extension extending upwardly therefrom, the lower end of said extension opening into the fluid beneath said support; a horizontal slotted baffle plate surrounding and resting upon the upper end of said extension; an air inlet tube centrally positioned within said tubular extension extending nearly to the bottom thereof and forming an annular passage; a cover for said receptacle through which the upper end of said inlet tube extends; and a horizontally disposed tubular air outlet secured to and extending through a side wall of said cover above said baffle plate, the inner end of which is provided with a plurality of elongated slits.

5. In a washing machine, the combination of a cylindrical receptacle adapted to contain a washing fluid; a discal support therein positioned slightly above the bottom thereof and having a central tubular extension extending upwardly therefrom, the lower end of said extension opening into the fluid beneath said support; a horizontal slotted baffle plate surrounding and resting upon the upper end of said extension; an air inlet tube centrally positioned within said tubular extension extending nearly to the bottom thereof and forming an annular passage; a cover for said receptacle provided with an air outlet and through the top of which the upper end of said tube extends; and means for clamping said cover to the upper end of said receptacle.

6. In a washing machine, the combination of a receptacle adapted to contain a washing fluid; a support therein positioned slightly above the bottom thereof and having a central tubular extension extending upwardly therefrom, the lower end of said extension opening into the fluid beneath said support; a horizontal slotted baffle plate surrounding and resting upon the upper end of said extension; and an air inlet tube open at the lower end centrally positioned within said tubular extension extending nearly to the bottom thereof and forming an annular passage and provided with a flaring lower end, the upper end of said air inlet tube projecting through said cover and being provided with means whereby it may be connected to an outside source of air supply.

7. In a washing machine, the combination of a receptacle adapted to contain a washing fluid; a support therein positioned slightly above the bottom thereof and having a central tubular extension extending upwardly therefrom, the lower end of said extension opening into the fluid beneath said support; a horizontal baffle plate surrounding and resting upon the upper end of said extension and provided with a plurality of narrow radial slots; a cover for said receptacle, an air inlet tube open at the lower end centrally disposed within said tubular extension and extending nearly to the bottom thereof and upwardly above the top of said cover; and means outside said cover for forcing air downwardly through said tube.

8. In a washing machine, the combination of a receptacle adapted to contain a washing fluid; a discal support therein positioned slightly above the bottom thereof provided at its outer edge with an upwardly curved flange and having a central tubular extension extending upwardly therefrom with a funnel shaped upper end, the lower end of said extension opening into the fluid beneath said support; a cover for said receptacle; a horizontal slotted baffle plate surrounding and resting upon the upper end of said extension; an air inlet tube centrally disposed within said tubular extension and extending nearly to the bottom thereof, said tube projecting beyond the top of said cover to which it is secured; and means outside said cover for forcing air downwardly through said tube.

9. In a washing machine, the combination of a receptacle adapted to contain a washing fluid; a support therein positioned slightly above the bottom thereof and having a central tubular extension extending upwardly therefrom, the lower end of said extension opening into the fluid beneath said support; an air inlet tube centrally disposed within said tubular extension and extending nearly

to the bottom thereof; a cover for said receptacle provided with a horizontally disposed tubular air outlet extending therefrom and through the top of which the upper end of said inlet tube extends; and a baffle plate secured to said cover below said outlet having a plurality of narrow radial slots.

10. In a washing machine, the combination of a receptacle adapted to contain a washing fluid; a support therein positioned slightly above the bottom thereof and having a central tubular extension extending upwardly therefrom, the lower end of said extension opening into the fluid beneath said support; an air inlet tube centrally disposed within said tubular extension and extending nearly to the bottom thereof; a cover for said receptacle through and above the top of which said inlet tube projects; a slotted baffle plate secured to the lower end of said cover with its lower face contacting with the upper end of said extension; a tubular air outlet secured to said cover above said baffle plate and provided at its inner end with a plurality of elongated slits in the periphery thereoef; and means connected to the upper projecting end of said tube for forcing air downwardly therethrough.

11. In a washing machine, the combination of a receptacle having a raised central portion in its bottom and adapted to contain a washing fluid; a support therein positioned slightly above the bottom thereof and having a central cone-shaped portion provided with a cylindrical extension extending upwardly therefrom, the lower end of said extension opening into the fluid beneath said support; a cover for said receptacle; a horizontal slotted baffle plate secured to said cover and surrounding and in contact with the upper end of said extension; an air inlet tube centrally disposed within and separated from said tubular extension extending nearly to the bottom thereof; a horizontally disposed tubular air outlet extending from said cover; and a flexible pipe extending from the upper end of said air inlet tube and adapted to be connected to the outlet of a device for discharging air under pressure into said air inlet tube.

Signed by me at 294 Washington St., Boston, Mass., this 5th day of April, 1932.

HENRY C. MAGNUS.