April 24, 1962 O. A. ANDERSON 3,031,396

STABILIZED PINCH MACHINE

Filed Sept. 11, 1957

Fig. 1.

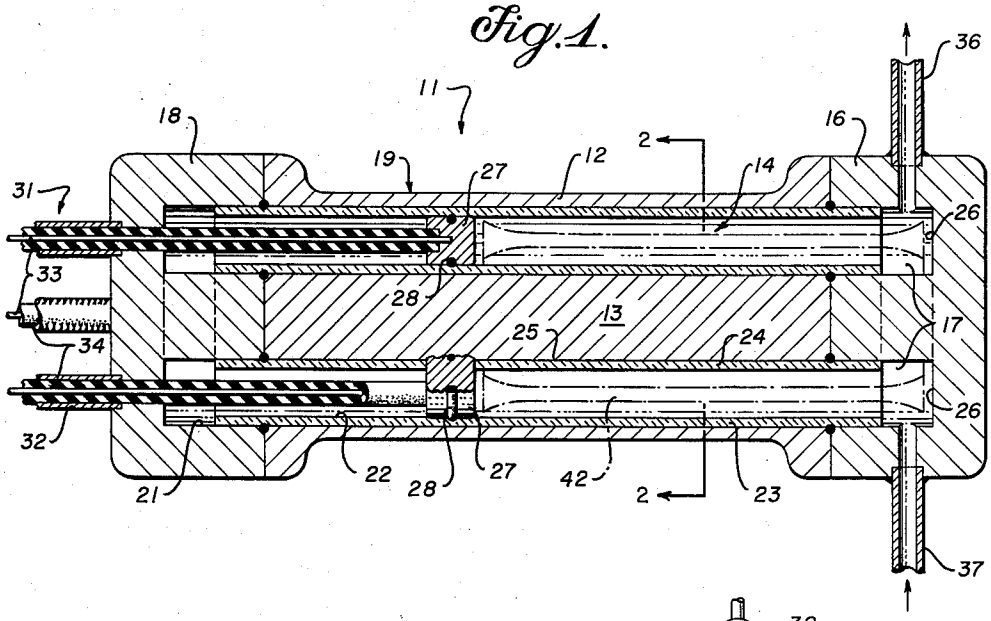

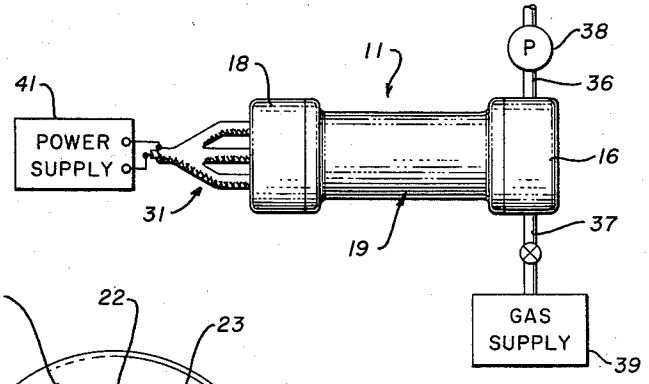

Fig. 3.

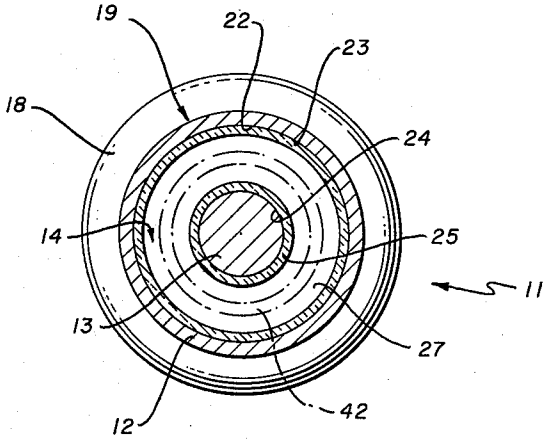

Fig. 2.

INVENTOR.
OSCAR A. ANDERSON
BY
Roland A. Anderson
ATTORNEY.

United States Patent Office 3,031,396
Patented Apr. 24, 1962

3,031,396

STABILIZED PINCH MACHINE

Oscar A. Anderson, Oakland, Calif., assignor to the United States of America as represented by the United States Atomic Energy Commission

Filed Sept. 11, 1957, Ser. No. 683,432
6 Claims. (Cl. 204—193.2)

The present invention relates in general to apparatus employing the pinch effect to compress a plasma and providing means for stabilization of a linear pinch discharge.

Devices employing the pinch effect to compress a plasma are well known in the art and are used, for example, in advanced physical research.

The present invention may be employed for a variety of purposes of which one of the most interesting is that of establishing thermonuclear reactions. Inasmuch as the basic theory of thermonuclear reactions and the enormous energy release to be gained therefrom is well known, no detailed discussion of such reactions is included herein. Suffice to say that the fusion of two deuterium nuclei, for example, is accompanied with the release of 3.4 million electron volts of energy and the fusion of other light nuclei release even greater amounts of energy. Such reactions only progress at very high temperatures as may, for example, be produced in a pinch device of the type herein disclosed. Also, as the numerous devices and methods for most advantageously utilizing this energy form no part of this invention, such is not herein described other than to note that energy may be withdrawn from the system in the form of heat, as direct electrical energy, or as high energy particles. As regards the foregoing areas of information, reference is made to the copending patent application of Richard Post, Serial No. 443,447, filed July 14, 1954.

The pinch effect employed in the present invention has long been known and the theory thereof was first published by Bennett in 1934 (Physical Review, volume 45, page 890). In brief, the pinch effect may be likened to the attractive force between two conductors carrying current in the same direction wherein the magnetic fields induced thereabout cancel between conductors so that a magnetic field pressure results urging the wires together. In a space neutralized discharge or plasma composed of a like quantity of electrons and positively charged ions, the foregoing reasoning is equally applicable since the moble electrons carry essentially all the current, as in a wire. Therefore, a plasma carrying a heavy current will constrict in a comparable manner and this constriction is generally denominated as the pinch effect.

Although plasma columns of various configurations are possible, by far the most uncomplicated is a straight column established between end electrodes and thus in many respects the most desirable is the straight column. As regards the pinch effect, research has shown that a conventional linear pinch is unstable against lateral perturbations. Inasmuch as the pinch effect is produced by magnetic fields produced by the plasma being pinched, a lateral irregularity, such as a kink or curve in the plasma column, causes the magnetic field to weaken on the convex side thereof because of the bowed field lines so that the kink becomes progressively worse until plasma disruption occurs. The theory of pinch kink instabilities may be found in a paper by M. Kruskal and M. Schwarzchild, published in the Proceedings of the Royal Society at volume 223, page 348. These so-called "kink instabilities" of linear pinch columns have in the past prevented the establishment of linear pinched plasmas of the temperatures required for establishing fusion reaction conditions, for example.

The present invention provides method and means for

stabilizing a linear pinched plasma column to prevent disruptive instabilities therein whereby the period of existence of such a column is extended and the attainable plasma density and temperature are maximized.

It is an object of the present invention to provide method and means for establishing a pinch plasma column.

It is another object of the present invention to provide means for counteracting magnetic field conditions that promote lateral instabilities in pinch discharges.

It is a further object of the present invention to provide means for producing a stable compressed and laterally confined plasma.

It is yet another object of the present invention to establish with the current flowing through a pinch plasma, magnetic fields opposing lateral plasma displacement.

It is an additional object of the present invention to produce a high frequency pulsed self-constricting plasma together with a stabilizing magnetic field induced by the plasma current.

Numerous other advantages and possible objects of the present invention may be discerned from the following description of a single preferred embodiment of the invention taken together with the accompanying drawing, wherein:

FIGURE 1 is a longitudinal sectional view of a pinch machine constructed in accordance with the present invention;

FIGURE 2 is a transverse sectional view taken at 2—2 of FIG. 1; and

FIGURE 3 is a plan view of the pinch machine with associated apparatus and circuitry.

Considering now the structural details of the illustrated embodiment of the invention and referring to the drawings, there will be seen to be provided as a part of the pinch machine 11 an elongated metallic cylinder 12 having a central coaxial conductor rod 13 disposed axially therethrough and defining therewith an elongated annular discharge chamber 14. A first end cap 16 is secured across one end of the cylinder 12 in closing relation thereto, as by bolts not shown, and includes an annular depression 17 therein aligned with the discharge chamber 14 and forming a part thereof. The end cap 16 is sealed to both the cylinder 12 and to the central rod 13 with the inclusion of suitable gaskets to insure a vacuum-tight seal about the connection. At the opposite end of the cylinder these is provided a second end cap 18 similar to the first and likewise secured to the cylinder and central rod to form therewith a rigid structure that with the first end cap comprises a vacuum-tight housing or envelope 19. The second end cap 18 also has an annular depression 21 therein aligned with the discharge chamber 14 and suitable gaskets are provided about the joinder of this end cap with the cylinder 12 and central rod 13 to insure vacuum-tight connection.

The above-described elements of the envelope 19 are formed of electrically conducting material, such as copper, and good electrical connection is made between the end caps and abutting cylinder and rod to form an electrically conducting path therethrough. Upon the inner surface 22 of the cylinder 12 there is disposed a cylindrical insulator 23, and likewise upon the surface 24 of the central rod 13, there is provided a cylindrical insulator 25 with both of these insulators extending into the end cap depressions so as to provide an electrically insulated boundary longitudinally of the discharge chamber 14.

In accordance with the invention, the annular end surface 26 of the end cap 16 is adapted to provide one electrode of a discharge established within the chamber 14 and the other electrode thereof is provided by a metal ring electrode 27 disposed within the chamber at a predetermined distance from the electrode surface 26. This ring electrode 27 fits snugly in the discharge chamber 14

in closing relation thereto and O-rings or other sealing means 28 are disposed about the inner and outer circumference of the ring electrode 27 to seal same to the insulating cylinders lining the discharge chamber. The ring electrode 27 is fully insulated from all of the elements of the housing 19.

Electrical connection is made to the pinch tube by means of a plurality of coaxial cables 31 with each having a conducting sheath 32 electrically contacting the end cap 18 and a central conductor 33 surrounded by an insulator 34 extending through the end cap 18. Electrical connection is made between the central coaxial conductor 33 of each cable and the ring electrode 27 as by insertion of the conductor into small bores in the back or outer side of the ring, as shown in FIG. 1. The coaxial cables 31 will thus be seen to be each electrically connected between the end cap 18 and the ring electrode 27.

As a further physical aspect of the pinch machine, there are provided a pair of tubes 36 and 37 communicating with the discharge chamber 14 as by insertion in radial bores through the end cap 16 and extending into the annular depression 17 thereof. These tubes are sealed to the end cap to provide a gastight connection therewith, and as shown in FIG. 3, one of the tubes is connected to a vacuum pump 38 for exhausting the chamber 14. The other tube 37 is connected to a metered supply of selected gas 39, as noted in more detail below, for admitting to the chamber 14 a selected quantity of reactant or gaseous fuel. Connected to the coaxial cables 31 is a pulsed current power supply 41 having the output thereof connected between the inner and outer conductors of the coaxial cables.

As regards the operation of the present invention and referencing again the drawings, there will be seen to be provided by the power supply 41 successive and periodic pulses of electrical power between the central conductor 33 and outer conductor or sheath 32 of the coaxial cables 31. The sheath 32 is electrically joined to the rear end cap 18 and thus by the metallic cylinder 12 to the other end cap 16 while the central coaxial conductor 33 is connected to the ring electrode 27 so as to impress the pulsed power across the gap between ring electrode 27 and end surface 26. As there is supplied through tube 37 a gas at low pressure within the chamber 14, this electrical energy which operates to accelerae free electrons in the chamber causes gas ionization by collisions between electrons and neutral gas molecules. These collisions ionize gas molecules by knocking one or more electrons therefrom and thus the resulting electrons and positively charged ions are acted upon by the impressed electric field to accelerate and suffer additional ionizing collisions. In this manner, there is produced within the chamber 14 a very high intensity arc discharge almost immediately following application of the electrical pulse and this arc discharge has approximately equal numbers of electrons and ions whereby space charge neutralization occurs and there results a plasma 42. As to the plasma configuration, the insulating cylinders 23 and 25 expose only the ring electrode 27 and end cap surface 26 to each other so that discharge to the cylinder walls or central rod is prevented and the plasma thus extends about the ring electrode and therefrom in a hollow cylindrical configuration to the end cap surface 26, as illustrated in FIGS. 1 and 2 of the drawings.

The intense arc discharge providing the abovenoted hollow cylindrical plasma will be seen to be susceptible to the pinch effect for the discharge induces a magnetic field surrounding same and tending to radially constrict the plasma. In the absence of the central conducting rod 13, the pinch effect would collapse the plasma radially inward; however, there is here provided a return current path for the discharge current through the central rod 13 and through the cylinder 12 so that this effect is modified. The condition may be best understood by considering a direction of current flow, for example, from the ring electrode 27 through the plasma 42 to the end cap surface 26 and back to the cable sheath along the rod 13 and cylinder 12. As the impressed electrical energy is pulsed at a high frequency, there is almost no current penetration of the rod and cylinder and the return current flows on the outer surface of the rod and the inner surface of the cylinder. As to the central rod 13, the current flow therealong produces a surrounding magnetic field having lines of force encircling the rod in a direction opposite to the direction of the magnetic field encircling the plasma because of the opposite directions of current flow in the two. The inner magnetic field about the rod tends to force the plasma cylinder radially outward into a region of lesser strength of that field and, as the self-induced magnetic field of the plasma attempts to constrict the plasma radially inward, it will be seen that the plasma is laterally compressed between the fields. The compression rate is quite rapid and of great magnitude so that there is produced a very dense plasma of the order required for interaction between the ionized atoms thereof. As a result of the above-described plasma establishment and compression, there results a concentration of high energy ionized atoms of a nuclear reactant such as deuterium or tritium having sufficient temperature to support fusion reactions between the ionized atoms.

There has been described above a device for establishing a high intensity plasma formed into a hollow column and laterally pinched or compressed to produce a pinched column wherein the conditions for fusion reactions are reached. As regards the utilization of energy released in fusion processes, numerous different methods have been advanced and it is beyond the scope of this invention to include same. Suffice to say that thermonuclear or fusion reactions liberate large quantities of energy which may be usefully harnessed. In brief, various alternatives are possible inasmuch as reaction energy appears in different forms depending upon the particular reaction chosen, so that a heat transfer medium may be employed to convey energy from the vicinity of the reaction, or high energy particles such as fourteen million electron volt neutrons produced in tritium-deuterium fusion may be employed for bombardment purposes in producing further reactions, as with lithium. The simplest, most economically attractive alternative, of course, is direct conversion to electrical energy, which is especially easy in a pulsed machine such as the present invention.

A further and very important part of the present invention is the freedom thereof from certain inherent instabilities present in linear pinched plasma columns. As previously noted, kink instabilities prevent even the establishment of intense plasma columns unless counteracted and in the present invention the particular return current structure provides for this counteraction. In this respect, consider again the foregoing example wherein current flows from the ring electrode 27 through the plasma 42 to the end cap 16 and returns along the central rod 13 and cylinder walls 12. Because of the relatively high pulsing frequency, the return current is governed by high frequency principles so as to flow almost entirely upon the surface of the conductors. This return current induces magnetic fields and stabilization of the plasma may be determined from considering the magnetic field about the central rod 13 which falls off hyperbolically outward of the rod and which opposes the self-induced field of the plasma. It will be readily seen that this central magnetic field about the rod thus operates to counteract lateral shifts in the plasma position from some median cylindrical position. As a further explanation of plasma stabilization, consider that current flowing through the plasma on the outer surface thereof and back along the inner surface of the cylinder wall traverses a closed loop encompassing a second closed loop traced by current flowing along the inner plasma surface and back over the surface of the central rod. Any lateral variation in the plasma

position will cause an increased distance around one loop with a decreased distance around the other and a consequent shift in loop inductances tending to return the loop currents to original values so that the plasma tends to stabilize in space.

As a consequence of the particular structure of this invention, there is provided a stabilization against plasma kinking so that disruptive plasma perturbations are precluded. There is thus produced a hollow linear pinched column of plasma that is constricted without destructive instabilities to the end of producing thermonuclear reactions and the device accomplishing same is both rugged and of simple construction.

What I claim is:

1. A pinch device comprising a cylindrical envelope adapted to contain a low pressure atmosphere of a gas to be operated upon and having an axial conductor rod therein, means including annular electrode surfaces in spaced relation longitudinally of the envelope and adapted to receive pulsed electrical energization for estabilshing a cylindrical plasma in said envelope, and electrical current supply means directing plasma current through said envelope and rod in a direction opposite to the direction of current flow in said plasma whereby the latter is laterally confined and compressed.

2. A pinch device as claimed in claim 1 further defined by said envelope having evacuation means connected to the interior thereof and a supply of a light element gas connected to the interior thereof whereby said plasma comprises light element ions and which is confined and heated to a high temperature.

3. A pinch machine comprising a metallic cylinder having an electrically insulated inner wall and a metallic end cap closing the cylinder, a metallic rod having an insulating coating and extending longitudinally through said cylinder into electrical contact with said end cap, an annular metallic electrode spaced from said end cap within said cylinder and defining therewith a closed reaction chamber, and means supplying a low pressure gas to said chamber, said device being adapted to receive pulsed electrical energization between said electrode and said cylinder and rod adjacent said electrode for establishing a cylindrical plasma column between said electrode and end cap said plasma column thickness thereby being laterally magnetically compressed to maximize the plasma temperature.

4. A pinch machine comprising a pair of spaced annular electrodes, a first hollow electrical conductor having an insulated inner surface and extending from electrical contact with a first electrode over and surrounding

the second electrode to define a closed chamber therewith, a second electrical conductor having an insulating coating and extending from electrical contact with the first electrode through a radially inward portion of the second electrode into electrical contact with said first conductor, and means introducing a low pressure gas into said closed chamber whereby pulsed electrical energy applied between said second electrode and said first and second conductors at the joinder of the latter produces a stabilized pinched plasma discharge column between said electrodes.

5. A pinch machine as claimed in claim 4 further defined by a source of high frequency pulsating direct current electrical energy electrically connected between said second electrode and the juncture of first and second conductors adjacent said second electrode whereby plasma column current flow is in a direction opposite to the flow of current in said conductors and a magnetic field induced by the latter stabilizes said plasma against lateral kinking.

6. A pinch machine comprising a pair of axially aligned spaced annular electrodes in a low pressure atmosphere, electrical current supply means establishing a high current discharge between said electrodes for producing a cylindrical plasma column therebetween, and electrical conductor means providing a return path of opposite direction for the current of said discharge axially of said plasma column whereby the latter is compressed into a thin-walled cylindrical column by the cooperative action of the self constricting pinch field and fiield produced by return current flow in the return path conductor.

References Cited in the file of this patent

UNITED STATES PATENTS

1,094,355	Wilmowsky	Apr. 21, 1914
1,290,600	Lipinski	Jan. 7, 1919
1,368,019	Buettner	Feb. 8, 1921
1,429,013	Avera	Sept. 12, 1922
2,868,991	Josephson et al.	Jan. 13, 1959
2,910,414	Spitzer	Oct. 27, 1959
2,919,370	Giannini et al.	Dec. 29, 1959

FOREIGN PATENTS

987,895	France	Apr. 18, 1951

OTHER REFERENCES

Review of Modern Physics, vol. 28, No. 3, July 1956, pp. 338, 359–362.

Science 15, August 1958, pages 337–342.