Dec. 6, 1966 G. R. MALLORY 3,289,242

DOOR CLOSERS

Filed Jan. 11, 1965

FIG. 1

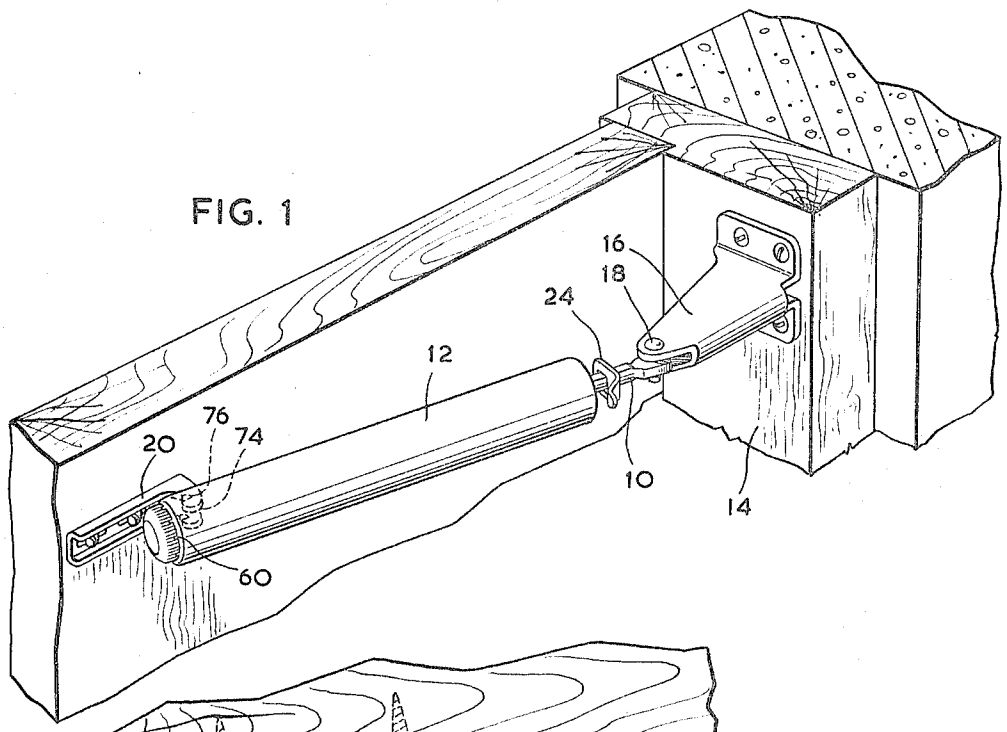

FIG. 2

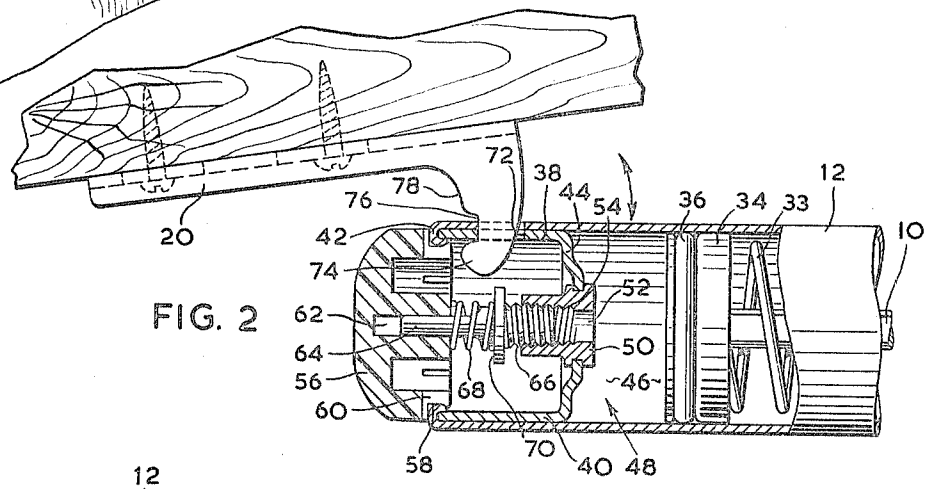

FIG. 3

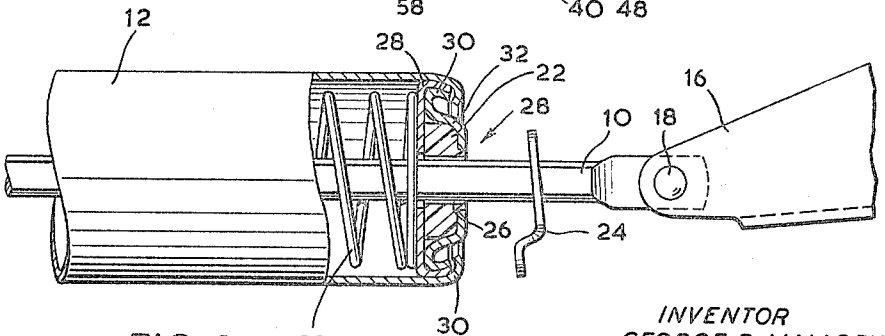

INVENTOR
GEORGE R. MALLORY
BY Fetherstonhaugh & Co.
ATTORNEYS

United States Patent Office

3,289,242
Patented Dec. 6, 1966

3,289,242

DOOR CLOSERS

George Raeburn Mallory, Sandys St., Blenheim, Ontario, Canada

Filed Jan. 11, 1965, Ser. No. 424,593
6 Claims. (Cl. 16—66)

This invention relates to door closers.

It is an object of this invention to provide a door closer having a telescopic rod and tubular member, one for attachment to a door and the other for attachment to a door frame, the tubular member being provided with a bushing for slidable reception of the rod, wherein such bushing and a housing therefor are designed to be a pre-assembled unit (allowing rotation of the bushing relative to the housing), which unit may then be conveniently attached to the tubular member.

In this way a bushing housing unit and tubular member is provided which is conveniently and easily assembled and secure when assembled.

It is an object of the invention to provide convenient and inexpensive method of attaching and securing the housing assembly mentioned in the second preceding paragraph to the tubular member.

It is an object of the invention to provide a door closer having a telescopic rod and tubular member, one for attachment to a door and the other for attachment to a stationary member, the unattached rod end riding in the tubular member, and being provided with a piston, and means whereby a chamber for said piston may be defined having a limited air passage in and out and having convenient means for controlling said passage size whereby the rate of closing said door may be controlled.

Objects of this invention are to provide convenient means for closing said chamber, convenient means for attaching and securing said closing means and for controlling said passage size.

It is an object of this invention to provide a door closer having a telescopic rod and tubular member, one for attachment to a door and the other for attachment to a stationary member, wherein said tubular member is designed to connect to a hook member which in turn is intended for attachment to one of the door or stationary members.

In drawings which illustrate a preferred embodiment of the invention:

FIGURE 1 is a perspective view of the invention in use;

FIGURE 2 is a cross-section showing the hook connection to the tubular member; and

FIGURE 3 is a view of the bushing for the rod.

In the drawings a door closer is shown comprising: a rod **10**, adapted to be received in and to telescope with a tubular member **12**. Rod **10** is designed for attachment to the stationary door frame **14** by means of a bracket **16** and a pivotal connection **18** between the rod and the bracket about an axis parallel to the axis of the door. Tubular member **12** is connected to the door by means of a hook having bracket **20** attached to the door and connected to the tubular member **12** in a manner which will be discussed in more detail hereafter.

Rod **10** enters the tubular member **12** through a bushing **22**, allowing the rod to slide easily therethrough. The bushing **22** is mounted to rotate with the rod about the axis thereof, the rod relative to tubular member **12**

to allow for variations in mounting and operation of the rod **10**.

Preferably the rod **10** is flat on two opposite sides and rounded on two opposite sides, and carries a "hold-open" washer **24** arranged to "bite" only into the rounded rod sides. The bushing bore corresponding to the rounded rod sides is preferably provided with enlargements **26** on intermediate opposed edges to pass "burrs" caused by the "bites." All the features referred to in this paragraph are discussed in full in Canadian Patent No. 646,969, which issued on August 21, 1962.

The tubular member **12** is preferably cylindrical in cross-section.

The bushing **22** and housing will now be discussed. A pair of members **28** and **30** of flat thin material, preferably form the housing and are preferably formed from metal. One of said members **28** is of flat shape, while the other **30** is provided with a recess **32** in the form of a surface of revolution designed to slidably receive the bushing **22** therein. The edge adjacent portions of the first and second members **28** and **30** are designed to be juxtaposed and the edge of one, preferably the flat member **28**, is curved toward the other then radially inward, whereby a concave inward surface is provided about the edge.

The edge of the recessed member **30** is curved to rest against said concave inward surface of the flat member **28**, whereby the recessed member **30** is held in place by the curved edge of the flat member **28**.

Thus the bushing **22** and housing may be pre-assembled by placing the bushing **22** in the recess **32** of member **30** with the edges thereof curved inward. The member **30** is placed inside the member **28** before the edges of the latter are turned inward. Thereafter the edges of member **28** are turned inward, whereby the concave surface of the flat member **28** holds the recessed member and thereby the bushing therein is securely held in place. The two housing members **28** and **30**, at a location aligned with the housing bore, are provided with apertures aligned with the bushing bore and large enough so that they do not interfere with the motion of rod **10** through the bushing.

The bushing housing may thus be conveniently pre-assembled for attachment to the tubular member **12**. The edge **30** of the tubular member **12**, at the end thereof where the rod **10** projects, is curved inwardly to be complementary to the outside of the curved edge of flat housing member **28**. Thus, if the tubular member **12** is formed of resilient material, the bushing housing **28** may be snapped into place after the inturned edge **30** is formed, or alternatively the housing **28** may be put in the tubular member first and the tubular member edge **30** then turned in to retain it in position.

The housing **28** is retained at the rod attachment end of the tubular member **12** by a compression spring **32** surrounding the rod, and bearing at one end on the housing **28** and at the other end on a piston **34** on the attachment-remote end of the rod. The main purpose of the spring **34** is, of course, to bias the telescopic members **10** and **12** to contracted position, and hence to bias the door toward closed position. The piston **34** is designed to make a close sliding fit with the sides of the tubular member **12** and is preferably provided with a washer **36** for close air sealing engagement with the sides of the tubular member.

At the end of the tubular member remote from the rod attachment end is provided a cup 38, having side walls 40 adapted to be slidably received inside the walls of the tubular member with the free edges of the cup held by the free edges of the tubular member turned inwardly and backwardly at 42 about the free end of the cup 38, whereby the cup 38 is effectively clamped in place in the cylinder. The cup 38 bottom 44 is located at the end of the cup walls adjacent the piston 34, and forms a stop therefor.

The cup-bottom 44 defines, with the piston 34 and the tubular member walls therebetween, a piston chamber 46, effectively allowing escape of air only through an aperture in the cup bottom, and wherein the rate of escape of air from the chamber controls the rate of contraction of the telescopic member and the rate of door closing.

The aperture 48 in cup-bottom 44 is circular and a nut 50 is mounted in the aperture, by means of aperture defining edges of the aperture resting in a circumferential groove in the nut. The nut may, in some arrangements, be "sprung" into place or may be inserted through aperture 48 and the piston-adjacent groove-defining flange then be provided by turning or otherwise working the projecting metal.

The nut 50 is provided with a bore 52 passing therethrough, and the rod-remote end of the bore 52 is provided with threading 54, tapering inwardly in the direction of the rod.

The in-turned rod-remote end 42 of the tabular member forms an inwardly facing ridge at that end of the tubular member. A resilient control knob or cap 56, preferably made of plastic, is provided with a skirt having an exterior groove 58, of dimension so that the groove will receive such ridge, and the cap 56 may thus be resiliently fitted to the tubular member 12 for rotation with respect thereto. The cap 56 is provided with grooves 60 located to connect the space defined by the cap bottom and the cup 38 with the exterior. These grooves 60 serve the purpose of assisting in the resilient attachment of the cap 56 and also allow the drainage of any water received in the cap 56.

The cap 56 defines an inwardly facing bore 62 complementary to a spindle 64, which is one end of an adjustment screw 66, the adjustment screw and spindle being all one piece, and the bore and spindle members are keyed for rotational movement together. The adjustment screw 66, remote from the cap 56, tapered and threaded to cooperate with the bore threading 54. Because of the cooperating tapered threading, the farther the adjustment screw 66 is turned into the threading 54, the smaller is the air escape route from the chamber 46, while turning the bolt out of the chamber enlarges the passage. To ensure that the adjustment screw 66 remains in the bore 54, a small compression spring 68, surrounding the spindle 64, bears at one end on the cap and at the other end on a shoulder 70 centrally located between the spindle 64 and the adjustment screw 66.

The double walls formed by the cup 40 and adjacent tubular member 12 are provided with a parallel pair of slots 72, whose longitudinal direction is substantially parallel to the telescopic axis. The bracket 20 for attachment to the door is provided with a pair of outstanding hooks 74, each of a size to be received in a slot 72. The hooks are each provided with a curved convex side and a concave side being a flat edge 76 bounded by two shoulders 78. The flat edge 76 is longer than and is oriented to cooperate with and rest against the double edge thickness of tubular member and cap wall slots 72 and defined thereby to retain the hook in position relative to the telescopic member.

The details of assembly of the door closer are well known, as are the details of attachment of the hook to the tubular member and the tubular member to the frame and the hook to the door. Thus, these matters will not be discussed herein.

Rotation of the cap 56 rotates the adjustment screw 66 to control the size of the air escape passage and the rate of closure of the door under the impulsion of the spring 32.

What I claim as may invention is:

1. In a door closer for attachment to a door member and a stationary member, and having: a tubular member for connection to one of said door and stationary members; a rod, telescopically slidable relative to said tubular member from an extended to a contracted position, for attachment to the other of said door and stationary members; a spring connected to said rod and said tubular member arranged to bias said members toward the contracted position, the end of said tubular member remote from said rod attachment end being provided with a cup defined by side walls and an apertured bottom at the end of said cup located toward said rod attachment end; and edges on said side walls remote from said bottom; said side walls being arranged to be received within the said end of said tubular member; the edges of tubular member end being turned inwardly over the edges of said cup to retain said cup in position; said rod having a piston adjacent the end thereof remote from its attachment end, said piston being designed and constructed to slide inside and in close proximity to the tubular member walls, the length of said tubular member between said cup bottom and the piston, in the extended position of said tubular member, being closed, whereby a variable volume chamber is provided defined by the bottom of said cup, said piston and said tubular member extent, said cup bottom having a restricted air passage, said restricted passage comprising means defining a tapered threaded bore extending through said cup bottom, an adjustment screw having thread adapted for threaded engagement in and rotated in said bore, said threaded engagement of said bore through said cup bottom and said adjacent screw being tapered whereby said passage is defined by space between the threads of said adjustment screw and said bore defining means, said adjustment screw and bore being designed and constructed so that rotation of said adjustment screw in one direction narrows said passage, and rotation of said adjustment screw in the other direction widens said passage; said in-turned edge of said tabular member being of cylindrical contour adjacent said adjustment screw, and providing a ridge at the end of said tubular member adjacent said cup, a cap having a manually engageable area and a cylindrical resilient skirt having a groove adapted to receive said ridge, whereby said cap may be resiliently and rotatably afixed to said tabular member with said ridge resting in said groove; and means for connecting said cap to said adjustment screw for rotation therewith.

2. A device as claimed in claim 1, wherein grooves are provided in said cap connecting the inside of said grooves with the exterior of said cap.

3. A device as claimed in claim 1, wherein said connecting means comprise a shank attached to said adjustment screw extending therefrom slidably into a complementary recess in the cap, said adjustment screw and said cap being keyed for rotation together.

4. A device as claimed in claim 1, wherein a compression spring surrounds said shank and the elements are designed and constructed so that said spring biases said adjustment screw towards said bore.

5. A device as claimed in claim 1, wherein means are provided biasing said adjustment screw towards said bore.

6. In a door closer for attachment to a door member and a stationary member, and having: a tubular member for connection to one of said door and stationary members; a rod, telescopically slidable relative to said tubular member from an extended to a contracted position, for attachment to the other of said door and stationary members; a spring connected to said rod and said tubular member arranged to bias said members toward the contracted position, wherein said tubular member is cylindrical at the end remote from the projecting end of said rod, wherein means are provided in the said remote end of said

tubular member which are rotatable relative to the tubular member to raise or lower the rate of contraction of said telescopic members, wherein said remote end is provided with a radially inwardly projecting ridge and there is provided a cap having a manually engageable area and a cylindrical resilient skirt, said skirt having a groove adapted to receive said ridge, whereby said cap may be resiliently and rotatably affixed to said tubular member with said ridge resting in said groove, and means coupling said rate controlling means to said knob for rotation thereby.

References Cited by the Examiner

UNITED STATES PATENTS

2,052,727	9/1936	Seyforth	16—66
2,753,587	7/1956	Quinn	16—66
2,812,533	11/1957	Falk	16—66
2,940,111	6/1960	Patriquin	16—66
3,032,806	5/1962	Mallory	16—66
3,131,420	5/1964	Quinn	16—66

BOBBY R. GAY, *Primary Examiner.*