(12) INTERNATIONAL APPLICATION PUBLISHED UNDER THE PATENT COOPERATION TREATY (PCT)

(19) World Intellectual Property Organization
International Bureau

(43) International Publication Date
03 January 2019 (03.01.2019)

WIPO | PCT

(10) International Publication Number
WO 2019/005191 A1

(51) International Patent Classification:
G02B 6/38 (2006.01) *G02B 6/44* (2006.01)

(21) International Application Number:
PCT/US2017/063938

(22) International Filing Date:
30 November 2017 (30.11.2017)

(25) Filing Language: English

(26) Publication Language: English

(30) Priority Data:

62/526,011	28 June 2017 (28.06.2017)	US
62/526,018	28 June 2017 (28.06.2017)	US
62/526,195	28 June 2017 (28.06.2017)	US

(71) Applicant: **CORNING RESEARCH & DEVELOPMENT CORPORATION** [US/US]; 1 Riverfront Plaza, Corning, New York 14831 (US).

(72) Inventor: **ROSSON, Joel Christopher**; 280 44th Avenue Circle NW, Hickory, North Carolina 28601 (US).

(74) Agent: **CARROLL, JR., Michael E.**; CORNING OPTICAL COMMUNICATIONS LLC, Intellectual Property Department SP-TI-03-1, Corning, New York 14831 (US).

(81) Designated States *(unless otherwise indicated, for every kind of national protection available)*: AE, AG, AL, AM, AO, AT, AU, AZ, BA, BB, BG, BH, BN, BR, BW, BY, BZ, CA, CH, CL, CN, CO, CR, CU, CZ, DE, DJ, DK, DM, DO, DZ, EC, EE, EG, ES, FI, GB, GD, GE, GH, GM, GT, HN, HR, HU, ID, IL, IN, IR, IS, JO, JP, KE, KG, KH, KN, KP, KR, KW, KZ, LA, LC, LK, LR, LS, LU, LY, MA, MD, ME, MG, MK, MN, MW, MX, MY, MZ, NA, NG, NI, NO, NZ, OM, PA, PE, PG, PH, PL, PT, QA, RO, RS, RU, RW, SA, SC, SD, SE, SG, SK, SL, SM, ST, SV, SY, TH, TJ, TM, TN, TR, TT, TZ, UA, UG, US, UZ, VC, VN, ZA, ZM, ZW.

(84) Designated States *(unless otherwise indicated, for every kind of regional protection available)*: ARIPO (BW, GH, GM, KE, LR, LS, MW, MZ, NA, RW, SD, SL, ST, SZ, TZ, UG, ZM, ZW), Eurasian (AM, AZ, BY, KG, KZ, RU, TJ, TM), European (AL, AT, BE, BG, CH, CY, CZ, DE, DK, EE, ES, FI, FR, GB, GR, HR, HU, IE, IS, IT, LT, LU, LV, MC, MK, MT, NL, NO, PL, PT, RO, RS, SE, SI, SK, SM, TR), OAPI (BF, BJ, CF, CG, CI, CM, GA, GN, GQ, GW, KM, ML, MR, NE, SN, TD, TG).

Published:
— *with international search report (Art. 21(3))*

(54) Title: COMPACT FIBER OPTIC CONNECTORS HAVING MULTIPLE CONNECTOR FOOTPRINTS, ALONG WITH CABLE ASSEMBLIES AND METHODS OF MAKING THE SAME

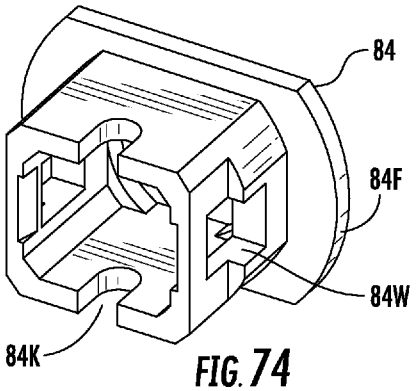

FIG. 74

(57) Abstract: Fiber optic connectors comprising multiple footprints along with cable assemblies and methods for making the same are disclosed. In one embodiment, the optical connector comprises a housing and a ferrule. The housing comprises a longitudinal passageway between a rear end and a front end. The fiber optic connector may be converted from a first footprint to a second footprint by a conversion housing that fits about a portion of the housing. The optical connectors disclosed may be tunable for improving optical performance and may also include a spring for biasing the ferrule to a forward position as desired.

WO 2019/005191 A1

COMPACT FIBER OPTIC CONNECTORS HAVING MULTIPLE CONNECTOR FOOTPRINTS, ALONG WITH CABLE ASSEMBLIES AND METHODS OF MAKING THE SAME

CROSS-REFERENCE TO RELATED APPLICATIONS

[0001] This application claims the benefit of U.S. Application No. 62/428,212, filed on November 30, 2016, U.S. Application No. 62/428,219, filed on November 30, 2016, U.S. Application No. 62/428,224, filed on November 30, 2016, U.S. Application No. 62/428,230, filed on November 30, 2016, U.S. Application No. 62/428,234, filed on November 30, 2016, U.S. Application No. 62/451,244, filed on November 30, 2016, U.S. Application No. 62/428,252, filed on November 30, 2016, U.S. Application No. 62/451,221, filed on January 27, 2017, U.S. Application No. 62/451,234, filed on January 27, 2017, U.S. Application No. 62/526,011, filed on June 28, 2017, U.S. Application No. 62/526,018, filed on June 28, 2017, and U.S. Application No. 62/526,195, filed on June 28, 2017, the content of which is relied upon and incorporated herein by reference in entirety.

BACKGROUND

[0002] The disclosure is directed to fiber optic connectors along with methods for making fiber optic connectors. More specifically, the disclosure is directed to fiber optic connectors having improved or simplified designs along with methods of making.

[0003] Optical fiber is increasingly being used for a variety of applications, including but not limited to broadband voice, video, and data transmission. As bandwidth demands increase optical fiber is migrating toward subscribers in outdoor communication networks such as in fiber to the premises applications such as FTTx and the like. To address this need for making optical connections in communication networks for outdoor environments hardened fiber optic connectors were developed. One of the most commercially successful hardened fiber optic connector is the OptiTap® connector sold by Corning Optical Communications LLC of Hickory, North Carolina, such as disclosed in U.S. Pat. Nos. 7,090,406 and 7,113,679 (the '406 and '679 patents). The OptiTap® connector is a hardened male plug connector for terminating a fiber optic cable and the

assembly is configured for optical connection such as with a complementary receptacle. As used herein, the term “hardened” describes a connector or receptacle port intended for making an environmentally sealed optical connection suitable for outdoor use, and the term “non-hardened” describes a connector or receptacle port that is not intended for making an environmentally sealed optical connection such as the well-known SC connector.

[0004] **FIGS. 1A-1C** are prior art depictions showing various stages of mating of a preconnectorized cable 1 having a plug connector 5 such as an OptiTap® connector with a receptacle 3. Receptacle 3 mates plug connector 5 with a standard SC connector (i.e., a non-hardened connector) at a second end (not visible in these views) using an adapter sleeve for aligning ferrules when mating plug connector 5 with the a non-hardened connector. Protection of the non-hardened connector side of the receptacle is typically accomplished by mounting the receptacle 3 through a wall of an enclosure or the like so that the non-hardened end of the receptacle is disposed inside the enclosure for environmental protection of the non-hardened connector. As shown by **FIGS. 1A-1C**, the other end of the receptacle 3 is accessible for receiving the plug connector 5 at the wall of the enclosure. Other applications may mount the receptacle 3 inside an enclosure on a bracket or the like.

[0005] Receptacle 3 allows an optical connection between the hardened connector such as the OptiTap® male plug connector with a non-hardened connector such as the SC connector at nodes in the optical network that typically transition from an outdoor space to an enclosed and protected space. Receptacle 3 is described in further detail in US Pat. No. 6,579,014. Receptacle 3 includes a receptacle housing and an adapter sleeve disposed therein. The receptacle 3 receives a non-hardened connector at a second end as represented by the arrow pointing to the left. The receptacle 3 typically requires mounting through a wall of a closure, or inside the closure, such as a closure mounted on the side of subscribers premises, disposed in an underground vault or on a pole for protecting the non-hardened connector for outside plant deployments.

[0006] Network operators face many challenges for building, deploying and connecting subscribers to outside plant communication networks such as Fiber-to-the-

Home (FTTH) or Fiber-to-the-location (FTTx) networks. Besides right of way access for the communication networks, network operators may have limited space to available on existing poles or in existing vaults for mounting devices. Initially, conventional hardened fiber optic connectors were typically mounted on robust and relatively stiff fiber optic cables, and slack storage for these fiber optic cables may also consume limited space or become unsightly in aerial deployments. Further as outside plant deployments evolved many network operators desired to route the fiber optic cable assembly with the connector through an existing wall of a subscriber premises and into the building or route the fiber optic cable assembly with the connector through a buried duct. Thus, network operators because sensitive to the size of the fiber optic connector for these types of deployment applications.

[0007] Consequently, there exists an unresolved need for fiber optic connectors that allow quickly and easy deployment and connectivity in a simple and efficient manner while still being cost-effective.

SUMMARY

[0008] The disclosure is directed to fiber optic connectors and methods of making fiber optic connectors as described and recited in the claim. The concepts disclosed allow a compact form-factor for an optical fiber connector suitable for numerous applications and variations as desired.

[0009] One aspect of the disclosure is directed a fiber optic connector comprising a housing, a ferrule comprising a fiber bore extending from a rear end to a front end, and a conversion housing. The housing comprises a rear end and a front end with a longitudinal passageway extending from the rear end to the front end, where a part of the rear portion of the housing comprises a round cross-section and a part of the front portion of the housing comprises a non-round cross-section with a transition region disposed between the rear portion and the front portion, where the transition region comprises a threaded portion and the housing provides a first connector footprint. The conversion housing cooperates with the housing for changing the fiber optic connector from the first connector footprint to a second connector footprint.

[0010] Another aspect of the disclosure is directed a fiber optic connector comprising a housing, a ferrule subassembly, and a conversion housing. The housing comprises a rear end and a front end with a longitudinal passageway extending from the rear end to the front end, and an opening at the rear end of the housing, where the housing provides a first connector footprint. The opening at the rear end of the housing is sized for receiving a portion of the ferrule subassembly. The ferrule subassembly comprises a ferrule carrier front end comprising at least a first cantilevered portion, a ferrule comprising a fiber bore extending from a rear end to a front end. The conversion housing cooperates with the housing for changing the fiber optic connector from the first connector footprint to a second connector footprint.

[0011] Yet another aspect of the disclosure is directed a fiber optic connector comprising a housing, a ferrule subassembly, and a conversion housing. The housing comprises a rear end and a front end with a longitudinal passageway extending from the rear end to the front end, and an opening at the rear end of the housing, where the housing provides a first connector footprint. The opening at the rear end of the housing is sized for receiving a portion of the ferrule subassembly. The ferrule subassembly comprises a ferrule carrier front end comprising at least a first cantilevered portion, a second cantilevered portion, a resilient member pocket disposed between the first cantilevered portion and the second cantilevered portion, a resilient member, a ferrule comprising a fiber bore extending from a rear end to a front end. The conversion housing cooperates with the housing for changing the fiber optic connector from the first connector footprint to a second connector footprint.

[0012] The disclosure is also directed to methods of making a fiber optic connector. One method comprises placing the optical fiber into a ferrule, where the ferrule comprises a fiber bore extending from a rear end to a front end. The method also comprises placing the ferrule into a ferrule carrier, where the ferrule carrier comprises a ferrule carrier front end comprising at least a first cantilevered portion, and inserting the ferrule carrier into an opening at a rear end of the housing, where the housing cooperates with the front end of the ferrule carrier to inhibit rotation of the ferrule when the ferrule carrier is fully seated in the housing, and the housing provides a first connector footprint.

The method also includes attaching a conversion housing to the housing for changing the fiber optic connector from the first connector footprint to a second connector footprint.

[0013] The disclosure is also directed to a method of making a fiber optic connector comprising placing an optical fiber into a ferrule, where the ferrule comprises a fiber bore extending from a rear end to a front end, and placing the ferrule into a ferrule subassembly comprising a ferrule carrier having a ferrule carrier front end, where the ferrule carrier front end comprises at least a first cantilevered portion, tuning the ferrule, and inserting the ferrule subassembly into an opening at a rear end of the housing, where the housing cooperates with the front end of the ferrule carrier to inhibit rotation of the ferrule when the ferrule subassembly is fully seated in the housing, where the housing provides a first connector footprint. The method also includes attaching a conversion housing to the housing for changing the fiber optic connector from the first connector footprint to a second connector footprint.

[0014] The disclosure is also directed to still another a method of making a fiber optic connector comprising placing an optical fiber into a ferrule, where the ferrule comprises a fiber bore extending from a rear end to a front end, and placing the ferrule into a ferrule subassembly comprising a ferrule carrier having a ferrule carrier front end, a resilient member and a cable adapter, where the ferrule carrier front end comprises at least a first cantilevered portion, and a second cantilevered portion, tuning the ferrule, and inserting the ferrule subassembly into an opening at a rear end of the housing, where the housing cooperates with the front end of the ferrule carrier to inhibit rotation of the ferrule when the ferrule subassembly is fully seated in the housing, where the housing provides a first connector footprint. The method also includes attaching a conversion housing to the housing for changing the fiber optic connector from the first connector footprint to a second connector footprint.

[0015] Additional features and advantages will be set forth in the detailed description which follows, and in part will be readily apparent to those skilled in the art from that description or recognized by practicing the same as described herein, including the detailed description that follows, the claims, as well as the appended drawings.

[0016] It is to be understood that both the foregoing general description and the following detailed description present embodiments that are intended to provide an

overview or framework for understanding the nature and character of the claims. The accompanying drawings are included to provide a further understanding of the disclosure, and are incorporated into and constitute a part of this specification. The drawings illustrate various embodiments and together with the description serve to explain the principles and operation.

BRIEF DESCRIPTION OF THE FIGURES

[0017] **FIGS. 1A-1C** are prior art depictions showing various stages of mating of a prior art preconnectorized cable having a conventional hardened plug connector with a receptacle;

[0018] **FIG. 2** is a perspective view of a fiber optic cable assembly having a fiber optic connector with a housing according to one aspect of the disclosure;

[0019] **FIG. 3** is an exploded view of the fiber optic cable assembly of **FIG. 2**;

[0020] **FIG. 4** is a close-up perspective view of a fiber optic connector having a housing that is similar to the housing of **FIG. 2** and depicting geometric features of the housing according to one aspect of the disclosure;

[0021] **FIGS. 4A-4D** are respective cross-sectional views of the housing of **FIG. 4** taken along respective planes defined by lines 4A-4A, line 4B-4B, line 4C-4C and line 4D-4D;

[0022] **FIG. 4E** is a side view of an explanatory housing that is similar to housing shown in the fiber optic connector **FIG. 4** and further include threads that are discontinuous on the front portion;

[0023]

[0024] **FIG. 5** is an exploded view of a ferrule subassembly of the fiber optic connector of **FIG. 3**;

[0025] **FIGS. 6 and 7** are longitudinal sectional views of the ferrule subassembly cable assembly of **FIG. 3**;

[0026] **FIG. 8** is a perspective view of the ferrule carrier of the ferrule subassembly of **FIG. 3**;

[0027] **FIG. 9** is a close-up perspective view of the front end of the ferrule carrier of **FIG. 8**;

[0028] **FIG. 10** is a perspective view of an alternative ferrule carrier that may be used with the ferrule subassemblies disclosed herein;

[0029] **FIGS. 11 and 12** respectively are a partially exploded view and an assembled view of the alternative ferrule carrier depicted in **FIG. 10**;

[0030] **FIGS. 13 and 14** respectively are a partial sectional view and a cross-sectional view of the alternative ferrule carrier of **FIGS. 10-12** depicted assembled in a housing of a fiber optic connector;

[0031] **FIGS. 15 and 16** are longitudinal sectional views of the fiber optic cable assembly of **FIG. 2** showing details of the construction;

[0032] **FIG. 17** is an exploded view of another fiber optic cable assembly that is similar to the fiber optic cable assembly of **FIG. 2** with a fiber optic connector having a different ferrule subassembly;

[0033] **FIG. 18** is a partially exploded view of the fiber optic cable assembly of **FIG. 17** with the fiber optic cable attached to the ferrule subassembly;

[0034] **FIG. 19** is a perspective view of another cable assembly having a different fiber optic connector with a housing that is similar to the housing shown with the fiber optic connector of **FIG. 2** according to another aspect of the disclosure;

[0035] **FIG. 20** is a close-up perspective view of the fiber optic connector of **FIG. 19** depicting geometric features of the housing;

[0036] **FIG. 21** is an exploded view of another fiber optic cable assembly similar to that of **FIG. 19** with a fiber optic connector having a housing having threads that are discontinuous according to another aspect of the disclosure;

[0037] **FIG. 22** is an perspective assembled view of the fiber optic cable assembly of **FIG. 21**;

[0038] **FIG. 23** is a perspective view of the cable assembly of **FIG. 22** with a dust cap installed on the fiber optic connector;

[0039] **FIG. 24** is a longitudinal sectional view of the cable assembly of **FIG. 22** in a vertical direction;

[0040] **FIG. 25** is a detailed exploded view of the front end and of the fiber optic connector of **FIG. 22**;

[0041] **FIG. 26** is a cross-sectional view taken at an opening of the housing and showing a transverse ferrule retention member securing the ferrule of the fiber optic connector of **FIG. 22**;

[0042] **FIGS. 27 and 28** respectively are a detail view of an alternative transverse ferrule retention member and cross-sectional view showing the alternative transverse ferrule retention member for securing the ferrule;

[0043] **FIG. 29** is a longitudinal sectional view of a front portion of the fiber optic connector of **FIG. 22** in a horizontal direction;

[0044] **FIG. 30** is a front end sectional view of a housing having a tuning pocket that allows rotational tuning of the ferrule during manufacture for improving optical performance;

[0045] **FIGS. 31 and 32** depict explanatory ferrules having at least one selectively tunable surface;

[0046] **FIGS. 33-36** are various views of depicting the housing of the fiber optic connector of **FIG. 23**;

[0047] **FIG. 37** is a perspective view of another fiber optic cable assembly with still another alternative fiber optic connector having a nosepiece;

[0048] **FIG. 38** is a perspective view of the fiber optic cable assembly of **FIG. 37** showing a sectional view of a dust cap having a pulling eye and that may be secured to the threads disposed on the housing;

[0049] **FIG. 39** is an exploded view of the cable assembly of **FIG. 37**;

[0050] **FIG. 40** is a front end sectional view of the fiber optic connector of **FIG. 37** showing the nosepiece attached to the front end of the housing;

[0051] **FIG. 41** is a front end view of the housing of **FIG. 37** showing a securing surface such as a weld interface on the housing so that the nosepiece may be attached to the housing so that it covers an opening for the transverse ferrule retention member;

[0052] **FIGS. 42 and 43** are perspective and side views of a fiber optic connector similar to **FIG. 37** having an alternative housing with a keying feature for fiber optic connectors;

[0053] **FIGS. 44 and 45** are perspective views of alternative housings depicting other locking feature designs for use with the fiber optic connectors disclosed;

[0054] **FIG. 46** is a perspective view of still another fiber optic cable assembly having a cable adapter that fits into a rear opening of a housing that can be changed for different types of fiber optic cables;

[0055] **FIGS. 47 and 48** respectively are a perspective view and a cross-sectional view the cable adapter of **FIG. 46**;

[0056] **FIGS. 47A and 48A** respectively are a perspective view and a cross-sectional view of another cable adapter;

[0057] **FIG. 49** is a sectional view of the rear portion of an explanatory fiber optic cable assembly showing the fiber optic cable within the cable adapter taken in a vertical direction to depict how the cable may be attached to the fiber optic connectors disclosed herein;

[0058] **FIG. 50** is a sectional view of the rear portion of the cable assembly of **FIG. 46** showing the fiber optic cable within the cable adapter taken in a horizontal direction;

[0059] **FIGS. 51-54** are various views of another fiber optic cable assembly having a keying portion configured as a female key; **FIG. 51A-53A** are various views of a portion of another fiber optic cable assembly having a cable adapter with flexures for cable bend-strain relief;

[0060] **FIG. 54A** is a front perspective view of another housing that may be used with the fiber optic connector concepts disclosed herein;

[0061] **FIG. 55** depicts a distribution cable having a fiber optic connector according to the concepts disclosed disposed on a tether;

[0062] **FIG. 56** is a perspective view of an explanatory fiber optic connector that further comprise a conversion housing attached about the housing for changing the fiber optic connector from a first connector footprint to a second connector footprint;

[0063] **FIG. 57** is a sectional view of the fiber optic connector of **FIG. 56**;

[0064] **FIG. 58** is a partially exploded view of an explanatory fiber optic connector showing the fiber optic connector with a first connector footprint along with a conversion housing for changing the fiber optic connector to a second connector footprint that is a hardened connector footprint;

[0065] **FIG. 59** is an assembled view of the fiber optic connector of **FIG. 58** showing the second connector footprint as a hardened connector footprint with the dust cap removed for clarity;

[0066] **FIG. 60** is an assembled view of the fiber optic connector of **FIG. 58** showing the second connector footprint with the dust cap installed;

[0067] **FIG. 61** is a sectional view of the fiber optic connector of **FIG. 60.**

[0068] **FIG. 62 and FIG. 62A** respectively are top and bottom perspective views of a connector housing and an explanatory fiber optic connector that may have a conversion housing attached about the housing for changing the fiber optic connector from a first connector footprint to a second connector footprint;

[0069] **FIG. 63** is an assembled view of the fiber optic connector of **FIG. 62** after conversion to a second connector footprint configured as a hardened connector footprint with the dust cap removed for clarity;

[0070] **FIGS. 64 and 65** are cross-sectional views of the housing of the connector of **FIG. 62**;

[0071] **FIG. 66** is a partially exploded view of the front end of the connector depicted in **FIG. 62A and 63**;

[0072] **FIG. 67** is a cross-sectional view of the front end of the connector depicted in **FIGS. 62A and 63**;

[0073] **FIG. 68** is a perspective view of the ferrule and ferrule holder of the connector depicted in **FIGS. 62A and 63**; and

[0074] **FIG. 69** is a front end view of the connector depicted in **FIGS. 62A and 63** without the SC housing showing the details for the retention of the ferule holder assembly;

[0075] **FIG. 70** is a perspective view of another connector having a ferrule disposed within a ferrule holder with a conversion housing aligned for attachment using the threaded transition region;

[0076] **FIG**. 71 is cross-sectional view of the conversion housing shown in **FIG. 70.**

[0077] **FIG. 72 and 73** are sectional views of assembled connector of **FIGS. 70** with the conversion housing attached;

[0078] **FIG. 74 and 75** are perspective views of the retaining member for the conversion housing depicted in **FIG. 70**; and

[0079] **FIGS. 76 and 76A** respectively are a perspective view and cross-sectional view of another connector housing comprising a non-round rear portion.

DETAILED DESCRIPTION

[0080] Reference will now be made in detail to the embodiments of the disclosure, examples of which are illustrated in the accompanying drawings. Whenever possible, like reference numbers will be used to refer to like components or parts.

[0081] One aspect of the disclosure is directed to a fiber optic connector comprising a housing having a rear end and a front end with a longitudinal passageway extending from the rear end to the front end. A part of the rear portion of the housing comprises a round cross-section and a part of the front portion of the housing comprises a non-round cross-section with a transition region disposed between the rear portion and the front portion with the transition region comprising a threaded portion, and the housing provides a first connector footprint. The fiber optic connector also comprises a ferrule having a fiber bore extending from a rear end to a front end, and a conversion housing that cooperates with the housing for changing the fiber optic connector from the first connector footprint to a second connector footprint.

[0082] The disclosure is also directed to a fiber optic connector comprising a housing, a ferrule subassembly, and a conversion housing. The housing comprising a rear end and a front end with a longitudinal passageway extending from the rear end to the front end, and an opening at the rear end of the housing, where the housing provides a first connector footprint. The opening of the rear end of the housing is sized form receiving a portion of the ferrule subassembly, and the ferrule subassembly comprising a ferrule carrier comprising a ferrule carrier front end having at least a first cantilevered portion, and a ferrule comprising a fiber bore extending from a rear end to a front end. The conversion housing cooperates with the housing for changing the fiber optic connector from the first connector footprint to a second connector footprint.

[0083] The disclosure is also directed to a fiber optic connector comprising a housing, a ferrule subassembly, and a conversion housing. The housing comprising a rear end and a front end with a longitudinal passageway extending from the rear end to

the front end, and an opening at the rear end of the housing, where the housing provides a first connector footprint. The opening of the rear end of the housing is sized form receiving a portion of the ferrule subassembly, and the ferrule subassembly comprising a ferrule carrier comprising a ferrule carrier front end having a first cantilevered portion, a second cantilevered portion, and a resilient member pocket disposed between the first cantilevered portion and the second cantilevered portion, a resilient member, and a ferrule comprising a fiber bore extending from a rear end to a front end. The conversion housing cooperates with the housing for changing the fiber optic connector from the first connector footprint to a second connector footprint.

[0084] The disclosure is also directed to a method of making a fiber optic connector comprising placing an optical fiber into a ferrule, where the ferrule comprises a fiber bore extending from a rear end to a front end, placing the ferrule into a ferrule carrier, where the ferrule carrier comprises a ferrule carrier front end comprising at least a first cantilevered portion, inserting the ferrule carrier into an opening at a rear end of the housing, where the housing cooperates with the front end of the ferrule carrier to inhibit rotation of the ferrule when the ferrule carrier is fully seated in the housing, where the housing provides a first connector footprint, and attaching a conversion housing where the conversion housing cooperates with the housing for changing the fiber optic connector from the first connector footprint to a second connector footprint.

[0085] The disclosure is also directed to a method for making a fiber optic connector comprising placing an optical fiber into a ferrule, where the ferrule comprises a fiber bore extending from a rear end to a front end, placing the ferrule into a ferrule subassembly comprising a ferrule carrier having a ferrule carrier front end comprising a first cantilevered portion, tuning the ferrule, inserting the ferrule subassembly into an opening at a rear end of the housing, where the housing cooperates with the front end of the ferrule carrier to inhibit rotation of the ferrule when the ferrule subassembly is fully seated in the housing, where the housing provides a first connector footprint, and attaching a conversion housing where the conversion housing cooperates with the housing for changing the fiber optic connector from the first connector footprint to a second connector footprint.

[0086] The disclosure is directed to still another method of making a fiber optic connector comprising placing an optical fiber into a ferrule, where the ferrule comprises a fiber bore extending from a rear end to a front end, placing the ferrule into a ferrule subassembly comprising a ferrule carrier having a ferrule carrier front end, a resilient member, and a cable adapter, where the ferrule carrier front end comprises a first cantilevered portion and a second cantilevered portion, tuning the ferrule, inserting the ferrule subassembly into an opening at a rear end of the housing, where the housing cooperates with the front end of the ferrule carrier to inhibit rotation of the ferrule when the ferrule subassembly is fully seated in the housing, where the housing provides a first connector footprint, and attaching a conversion housing where the conversion housing cooperates with the housing for changing the fiber optic connector from the first connector footprint to a second connector footprint.

[0087] The concepts disclosed advantageously provide fiber optic connectors that allow streamlined manufacture and assembly along with easy and intuitive connectivity with other devices while still having a compact footprint. The fiber optic connectors disclosed are explained and depicted with several different embodiments and various other alternative components or optional features that may be incorporated into one or more of the fiber optic connector concepts as desired. By way of explanation, several different variations of housings are disclosed that can be modified to use with connector constructions where the ferrule loads from either the rear end of the housing or the ferrule load from the front end of the housing. Some embodiments may advantageously use fewer parts while providing robust and reliable optical performance. For instance, some of the embodiments disclosed may have the ferrule cooperate directly with an housing (e.g., assembled) without using a ferrule holder like conventional fiber optic connectors. Other constructions may increase the part count of the connectors for various reasons or could use a ferrule holder if desired.

[0088] In one aspect the fiber optic connectors (hereinafter “connector”) disclosed advantageously comprise a housing and a ferrule. The housing provides a first connector footprint that interfaces with other devices for making an optical connection and various different first connector footprints are disclosed herein that may be used with the connector constructions disclosed. The first connector footprints may be defined by a

housings having a rear portion (RP) and a front portion (FP). First connector footprints may also be further defined by a transition region (TR) disposed between the rear portion (RP) and the front portion (FP) of the housing.

[0089] In one explanatory example, the housing comprises a part of the rear portion (RP) having a round cross-section (RCS) and a part of the front portion having a non-round cross-section (NRCS). The front portion (FP) or the rear portion (RP) of the housing may be further defined in various configurations as disclosed herein while retaining a part of the rear portion (RP) with the round cross-section (RCS) and a part of the front portion (FP) having a non-round cross-section (NRCS). By way of explanation, the front portion (FP) may have a rectangular cross-section that provides a first orientation feature for the connectors for alignment during mating and inhibit insertion into a non-compliant device or port.

[0090] However, other variations of housings according to the concepts disclosed are possible. As an example of another housing disclosed herein for use with the connector constructions disclosed, the housing may be defined as comprising a part of the rear portion (RP) having a polygonal cross-section (PCS) and a part of the front portion having a non-round cross-section (NRCS). The front portion (FP) or the rear portion (RP) of this explanatory housing may be further defined in various configurations as disclosed herein while retaining a part of the rear portion (RP) with the polygonal cross-section (PCS) and a part of the front portion (FP) having a non-round cross-section (NRCS). By way of example, the polygonal cross-section (PCS) may be a hexagon, a rectangle, a square or other suitable polygon as desired such as shown in **FIG. 76 and 76A**.

[0091] Housings disclosed herein define the mating interface for a complimentary device suitable for mating with the connector and the connector footprints disclosed are useful for inhibiting insertion into a non-compliant port or device and damaging either the connector or the device along with assuring a suitable optical operation for the optical connection since the connector and device are matched. Moreover, the housings may have features that aid in the proper alignment or orientation of the connector with the complimentary device such as markings, keys, keyways, etc. without significantly changing the primitive form-factors of the housings that are disclosed and claimed herein.

By way of example, even though a round cross-section may include another feature such as a key or a keyway it is still considered to be a round cross-section. Additionally, housing may have other features such as locking features for securing the optical mating with a complimentary device or threads for securing a dust cap.

[0092] The housing footprints disclosed herein may be further defined by other geometry of the housing(s). By way of example, the transition region (TR) disposed between the rear portion (RP) and the front portion (FP). The transition region (TR) may have different configurations according to the concepts disclosed. In one embodiment, the transition region (TR) may comprise a first transition portion (TP1) disposed on a first side of the housing and a second transition portion (TP2) disposed on a second side of the housing. The first transition portion (TP1) and the second transition portion (TP2) may be spaced apart by an offset distance (OD) in the longitudinal direction. However, other embodiments of housings disclosed herein may have all of the transition portions of the transition region (TR) aligned along a common transverse plane of the connector as desired. In still other embodiments, the transition region (TR) of the housing may comprise a threaded portion (TP).

[0093] Other variations may further define the housing footprints disclosed herein. By way of example and explanation for use with appropriate housings disclosed, the first transition portion (TP1) comprises a first riser dimension (FRD) from the non-round cross-section (NRCS) to the round cross-section (RCS), and the second transition portion (TP2) comprises a second riser dimension (SRD) from the non-round cross-section (NRCS) to the round cross-section (RCS), where the first riser dimension (FRD) is different that the second riser dimension (SRD).

[0094] By way of another example of non-round cross-section (NRCS) for use with appropriate housings disclosed herein, a part of the front portion (FP) of the housing having the non-round cross-section (NRCS) comprises a rectangular cross-section having rounded corners (RC). The rectangular cross-section with rounded corners (RC) is a non-round cross-section (NRCS) due to the rectangular cross-section. The rounded corners (RC) may be sized so they have a similar outer dimension (OD) as a dimension (D) for the round cross-section (RCS) or not. The rounded corners (RC) may provide stability and snug fit for the mated connector within a port or device when side-pull forces are

experienced to inhibit undue optical attenuation by having the round corners transition between the front portion (FP) to the rear portion (RP). However, other geometry is possible such as chamfers or the like such as when the rear portion (RP) has a polygon cross-section (PCS).

[0095] The housing footprints disclosed herein may be still further defined by other geometry of the housing(s). For instance, the front portion (FP) of the housing may comprise another cross-section portion (ACSP). By way of explanation, the another cross-sectional portion (ACSP) may comprise a SC footprint. The SC footprint can, in part, be similar to the inner housing of a conventional SC connector. This particular housing footprint is useful for allowing the connectors disclosed to be backwards compatible into existing devices or ports using well-established connector footprints as desired.

[0096] Housings may also define further features such as a transition region disposed between the rear portion and the front portion with the transition region comprising an asymmetric transition with respect to a longitudinal axis of the housing. Likewise, other features on the housing may define the housing as asymmetric for orientation or mating with compliant devices or ports.

[0097] Another aspect for some of the advantageous connectors disclosed herein comprise one or more features allowing for rotation of the ferrule during assembly for tuning the connector and improving optical performance. Some of the connector designs disclosed also offer multi-stage tuning of the ferrule/assembly or infinite tuning of the ferrule/assembly to any desired rotational position for improving optical performance.

[0098] The concepts described herein are suitable for making both indoor and outdoor fiber optic cable assemblies using the connectors disclosed such as drop or distribution cables. Further, the fiber optic connectors disclosed may allow for the use of one or more additional components for changing the connector form-factor defined by the particular housing. By way of example, a conversion housing may cooperate with the housing of the connector for changing the fiber optic connector from the first connector footprint defined by the housing to a second connector footprint at least partially defined by the conversion housing. Consequently, the connectors disclosed herein may be

converted to be compatible as other well-known commercial connectors for Fiber-to-the-Home applications such as an SC connector or an OptiTap® connector such as available from Corning Optical Communications of Hickory, NC. Of course the concepts disclosed herein may be used with other fiber optic connector types whether hardened or not and are not limited to these particular connector conversions. Likewise, the connector designs disclosed may be hybrid designs with both optical and electrical connectivity. Electrical connectivity may be provided by contacts on or in a portion of the housing of the connector and may be useful for power or data as desired for applications such as FTTx, 5G networks, industrial applications or the like. These and other additional concepts are discussed and disclosed in illustrative detail with reference to FIGS. herein.

[0099] Several different constructions of fiber optic cable assemblies 100 (hereinafter "cable assemblies") comprising connector 10 and variations of connector 10 are disclosed herein. The connectors 10 may use any of the suitable housings or different connector constructions as desired and appropriate. By way of explanation, **FIGS. 2, 2A, 3 and 5-17** disclose connectors where a ferrule 30 is inserted from a rear end 21 of housing 20, and **FIGS. 19-43** and **FIGS. 46-53** disclose connectors where ferrule 30 is inserted from a front end 23 of the connector 10. However, housings 20 may be modified for using connector designs. **FIGS. 4A-4E** depict an explanatory housing 20 for discussing geometry that generally speaking may be used with any appropriate connector construction as well as have the housing modified or altered for the desired housing design or connector construction. Likewise, housing 20 of **FIG. 62** with the threaded transition portion (TP) may be modified or altered for the desired housing design or connector construction. **FIGS. 44 and 45** disclose concepts related to alternative locking features 20L for use with housings 20 as appropriate. **FIGS. 46-53** disclose another cable assembly 100 comprising connector 10 concepts disclosing another cable adapter that may be used with appropriate connectors 10 disclosed herein. **FIG. 54** depicts connector 10 according to the concepts disclosed having another housing footprint. **FIGS. 56-61** disclose cable assemblies 100 comprising connectors 10 having a first connector footprint where the connectors 10 may be convertible to connectors 10' having a second connector footprint using a conversion housing 80,82. **FIGS. 62-69** disclose cable assemblies 100

comprising connectors 10 having a first connector footprint where the connectors 10 may be convertible to connectors 100'' having a second connector footprint using a different conversion housing 82. **FIGS. 70-78** disclose a connectors where ferrule 30 is disposed within a ferrule holder 49 and inserted from a front end 23 of the connector 10.

[00100] **FIG. 2** is a perspective view and **FIG. 3** is an exploded view of cable assembly 100 having connector 10 and a fiber optic cable 90 (hereinafter "cable"). **FIGS. 15 and 16** are longitudinal sectional views of the cable assembly 100 of **FIG. 2** showing details of the construction. **FIG. 62A** depicts cable assembly 100 having connector 10 with a housing 20 that is similar to the housing 20 for connector 10 of **FIG. 2**, but the housing 20 of **FIG. 62 and 62A** has a different transition region TR. Specifically, the housing 20 of **FIG. 62** has a transition region TR with a threaded portion TP and may be used with the connector constructions disclosed herein as appropriate.

[00101] Connector 10 comprises housing 20 and a ferrule 30. Housing 20 comprises a rear end 21 and a front end 23 with a longitudinal passageway 22 extending from the rear end 21 to the front end 23. As best shown in **FIG. 7**, ferrule 30 comprises a fiber bore 32 extending from a rear end 31 to a front end 33. Passageway 22 allows one or more optical fibers of cable 90 to pass through the housing 20 for insertion into fiber bore 32 of ferrule 30 such as depicted in **FIG. 7**. Cable 90 comprises at least one optical fiber 92, one or more strength components 94 and a cable jacket 98.

[00102] Connector 10 or components of connector 10 as depicted in **FIGS. 2, 2A, 3 and 5-17** allows ferrule 30 to be inserted into housing 20 from rear end 21 of housing 20. Specifically, ferrule 30 is inserted into an opening 21A at the rear end 21 of housing 20. Housing 20 depicted in **FIG. 62** is similar to the housing 20 **FIG. 2**, except it has a different transition region (TR). Specifically, the transition region (TR) of the housing 20 of FIG. 62 comprises a threaded portion; otherwise the concepts of the connector are similar to the other disclosed herein. The thread portion (TR) allows the securing of an appropriate dust cap 70 and also allows for the conversion of the connector footprint such as to a hardened connector footprint such as shown in **FIGS. 62-69**. However, the concepts of the rear inserted connector constructions may be used with any suitable housing disclosed herein.

[00103] As depicted, connector 10 of **FIG. 3** comprises housing 20, ferrule sub-assembly 60 and cable adapter 59. In this embodiment, ferrule 30 is a portion of ferrule sub-assembly 60. An opening 21A at the rear end 21 of housing 20 is sized for receiving a portion of ferule sub-assembly 60. Ferrule sub-assembly 60 is configured to cooperate with the housing 20 for inhibiting the rotation of the ferrule sub-assembly 60 with respect to housing 20 when assembled. However, ferrule sub-assembly 60 may be configured to allow rotation of ferrule 30 for tuning as represented by arrows and angle θ as desired before the ferrule sub-assembly 60 is fully-seated within housing 20 as discussed herein.

[00104] Ferrule sub-assembly 60 also comprises a ferrule carrier 40. Ferrule carrier 40 may have different configurations as disclosed herein. Ferrule 30 is tunable relative to housing 20 if desired and may have step-tuning in defined increments based on the ferrule geometry. However, other features or designs disclosed herein for the connectors may allow infinite tuning of the ferrule to any desired rotation position. Tuning ferrule 30 allows improved optical performance by turning the ferrule so that any eccentricity in the optical fiber, ferrule or connector is rotated to a known rotational position or quadrant in a uniform manner. Consequently, connectors or other mating devices can be tuned to similar relative rotational positions for improving optical performance such as reducing optical insertion loss of due to optical fiber core misalignment or the like as understood in the art. Embodiments disclosed herein may also have a plurality of interfaces between components for tuning of the connector as desired.

[00105] The design of connector 10 of **FIG. 3** may also advantageously allow multi-stage tuning if desired. Ferrule 30 or other components/assemblies may be tunable in step increments such as by quadrants or be infinitely tuned as desired. By way of example, ferrule sub-assembly 60 may be may be configured to allow rotation of the sub-assembly with respect to cable adapter 59 (or other components) as desired for tuning ferrule 30 as represented by the arrows and angle ϕ as depicted. Moreover, multi-stage tuning may result in infinite tuning, which means that any desired rotational position desired for any eccentricity of the fiber core within the ferrule 30 is possible. The step or degree of tuning at different component interfaces may depend on the particular

construction of the ferrule, ferrule carrier, cable adapter or housing with respect to the permitted of rotation and the possible increments of rotation for the components.

[00106] By way of example, a first-stage of tuning may be step-tuning by quadrant and a second-stage of tuning may be infinite tuning to allow infinite rotation as desired. More specifically, the first-stage step-tuning may be used for gross tuning of the eccentricity of the fiber core such as to the desired quadrant of the and then the second-stage provides infinite tuning by allowing the fine tuning of the eccentricity of the fiber core within the quadrant for precise rotational positioning. By way of explanation, infinite tuning may accomplished by having one or more components rotate through an angle of ±180 degrees without step increments, thereby allowing any rotational position for ferrule 30. Of course, other tuning schemes are possible using the concepts disclosed herein. Likewise, variations of ferrule carrier 40 or ferrule subassembly 60 are possible and disclosed herein for use with any suitable housing 20.

[00107] Connector 10 of **FIG. 3** allows ferrule 30 to be rotated or tuned within the ferrule subassembly 60 as depicted. Ferrule 30 may be configured to rotate as a step rotation or infinite rotation depending on the particular design. For instance, ferrule 30 could have a selectively tunable surface 36 that is round for providing infinite rotational positioning or selectively tunable surface of ferrule 30 could comprise a plurality of planar surfaces 36 for step tuning by only allowing certain rotation positions. Moreover, infinite tuning of ferrule 30 may be accomplished by tuning or rotating though an angle θ of ±180 relative to the ferrule carrier 40 if desired. Being able to rotate one or more components in either direction allows for flexibility in tuning and inhibits excessive twisting of the optical fiber, which is generally undesirable.

[00108] Connector 10 of FIG. 3 also allows ferrule carrier 40 to be rotated for tuning the ferrule relative to housing 20 as depicted. In this embodiment, ferrule carrier 40 is tunable relative to the housing 20 by way of the rotational position of ferrule carrier 40 relative to cable adapter 59 or rotational position of the cable adapter 59 with respect to the housing. Specifically, ferrule carrier 40 may be tunable though an angle ϕ of ±180 relative to the housing 40 or in step-increments such as using ferrule carrier rotational key 41K **(FIG. 5)** or the like as desired. For instance, a ferrule carrier rear end 41 may have

one or more keys for cooperating with cable adapter 59 and only allowing certain positions for tuning, or the ferrule carrier rear end 41 may simply cooperate with the cable adapter 59 for providing infinite rotational positions for tuning. The details of tuning will be discussed in more detail below.

[00109] Likewise, it is possible for connector 10 of **FIG. 3** to have to a third interface for tuning. Specifically, the cable adapter 59 may be tunable relative to the rear end 21 of housing 20. Like the ferrule carrier rear end 41, a flange portion (not numbered) of cable adapter 59 may have one or more keys for cooperating with the rear end 21 of housing 20 and only allowing certain positions for tuning, or the flange portion of cable adapter 59 may simply cooperate with the rear end 21 of housing 20 for providing infinite rotational positions for tuning. Thus, connector 10 of **FIG. 3** provides several different tuning options for manufacturing depending on the desired requirements for the connector.

[00110] **FIGS. 4-4E** depict an explanatory housing 20 for connectors and will be described in further detail to explain concepts and geometry of housings 20 suitable for use with connector concepts disclosed herein. Although the housing of **FIG. 4** is a close-up perspective view of connector 10 having a different construction than the housing 20 depicted in **FIGS. 2 and 3,** the housing 20 of **FIG. 4** is similar to housing 20 of the connector of **FIGS. 2 and 3**. Generally speaking, the footprint of housing 20 of **FIG. 4** may be used with connector constructions that insert the ferrule 30 from the rear end 21 of housing 20 or connector constructions that insert the ferrule 30 from the front end 23 of housing with appropriate modification(s) for the connector construction.. By way of explanation, the longitudinal passageway 22 of the housing 20 may need to be modified for the different connector constructions as appropriate.

[00111] Connectors 10 disclosed herein may use any suitable housing 20 with the desired footprint or construction. The disclosure describes several different housings that may be used with connector constructions as appropriate and other variations are also possible. **FIG. 4** depicts housing 20 and connectors 10 may use a variety of different variations of the housing shown in **FIG. 4** or other housings such as the housing 20 shown in **FIG. 54** which has the locking feature on a separate component. Likewise, housing 20 may comprise one or more features for alignment during mating and may also comprise other features for securing or locking the connector in a suitable complimentary

port or device. Housing 20 has a relatively compact form-factor such as having a length L of about 40 millimeters (mm) or less and a cross-section dimension of about 15 mm or less such as 12 mm or less, but other suitable dimensions are possible for the housing.

[00112] **FIGS. 4A-4D** are respective cross-sectional views of the housing of **FIG. 4** taken along respective planes defined by line 4A-4A, line 4B-4B, line 4C-4C and line 4D-4D. Lines 4B-4B and 4C-4C are taken at the same cross-section. **FIG. 4E** is a side view of housing 20 that is similar to housing 20 shown in **FIG. 4**, but further includes threads 28 like housing 20 depicted in **FIGS. 3 and 4.** Threads 28 are disposed on the front portion FR of housing 20 and are discontinuous.

[00113] Housing 20 comprises the rear end 21 and the front end 23 with a longitudinal passageway 22 extending from the rear end 21 to the front end as shown in **FIG. 4E**. Housing 20 of FIGS. 4A-4E comprises a part of the rear portion RP having a round cross-section RCS and a part of the front portion having a non-round cross-section NRCS. Transition region TR is disposed between the rear portion RP and the front portion FP of housing 20. Transition region TR comprises a first transition portion TP1 disposed on a first side of the housing and a second transition portion TP2 disposed on a second side of the housing. In this version, the first transition portion TP1 and the second transition portion TP2 are spaced apart by an offset distance OD in the longitudinal direction of the housing 20 as best shown in **FIG. 4E**. The offset distance OD for the transition portion TP is useful since it allows connector only to fully-seat into complimentary devices or ports having the matching geometry. However, other housings 20 for connectors disclosed herein may omit the offset distance if desired.

[00114] Housings 20 may also have suitable features or structures for sealing connectors 10. The sealing plane should be located at a suitable location along the housing 20 for providing suitable environmental protection as necessary for the desired environment. Illustratively, housing 20 may include one or more grooves 20G for receiving an appropriately sized O-ring 65. Housings 20 may include other feature or structures for aiding in sealing. For instance, the housing 20 may have a suitable surface for receiving a portion of a heat shrink 99 or the like for sealing between a portion of the cable 90 and the connector 10. Any suitable heat shrink 99 may be used such as a glue-

lined heat shrink. Moreover, other structures or features are possible for aiding in providing a robustly sealed cable assembly 100.

[00115] As used herein, the transition region TR is disposed between the rear end 21 and the front end 23 where the housing 20 makes a transformational shift in the primitive cross-sectional shapes from a part of a rear portion RP to a part of the front portion FP. As used herein, a primitive cross-section means the outer perimeter of the cross-section without regard for the internal features of the cross-section. Further, portions of the cross-sections may include other features that modify the shape of the primitive cross-sections as desired such as a keying feature, retention feature or a locking feature, while still practicing the concepts of the transition region TR or front/rear portions as disclosed herein. For instance, a front portion FP may have rounded corners or chamfered corners while still being a rectangular cross-section.

[00116] In this embodiment of housing 20, the front portion FP of housing 20 has a rectangular cross-section that provides a first orientation feature for the connectors for alignment during mating and inhibit insertion into a non-compliant device or port. The non-round cross-section NRCS has the rectangular cross-section with a width W1 and a height H1 as shown in **FIG. 4B**. The rectangular cross-section provides the first orientation feature since the rectangular portion may only be inserted into a complimentary device or port in certain orientations due to its rectangular shape, thereby inhibiting incorrect insertion or insertion into non-compliant devices or ports.

[00117] As best shown in **FIG. 4C**, housing 20 of **FIGS. 4A-4E** has the first transition portion TP1 that comprises a first riser dimension FRD from the non-round cross-section NRCS to the round cross-section RCS, and the second transition portion TP2 comprises a second riser dimension SRD from the non-round cross-section NRCS to the round cross-section RCS, where the first riser dimension FRD is different that the second riser dimension SRD. The riser dimensions are measured perpendicular from the mid-point of the cord defined by the surface of non-round cross-section NCRS as shown in **FIG. 4C** to the outer surface of the round cross-section RCS.

[00118] The geometry of housing 20 of **FIGS. 4A-4E** also comprises the non-round cross-section NRCS comprising a rectangular cross-section having rounded corners RC, and the rounded corners RC are sized so they have a similar outer dimension OD as a

dimension D for the round cross-section RCS. The rounded corners (RC) may provide stability and snug fit for the mated connector 10 within a port or device when side-pull forces are experienced to inhibit undue optical attenuation by having the round corners transition between the front portion FP to the rear portion RP.

[00119] The front portion FP of housing 20 depicted has more than one primitive cross-sectional shape over its length. Specifically, the front portion FP of housing 20 of FIGS. 4-4E also comprises another cross-section portion ACSP. By way of explanation, the another cross-sectional portion (ACSP) may comprise a SC footprint. The SC footprint can, in part, be similar to the inner housing of a conventional SC connector. This particular housing footprint is useful for allowing the connectors disclosed to be backwards compatible into existing devices or ports using well-established connector footprints as desired. Other embodiments may have connectors configured for LC connector or other known connector footprints as desired.

[00120] As best shown in **FIGS. 4 and 4D**, the front portion FP of housing 20 may comprise another cross-section portion ACSP with a primitive cross-section that is different than the non-round cross-section NRCS depicted in **FIG. 4D**. More specifically, the non-round cross-section NRCS changes to another cross-section portion ACSP as shown. As depicted in **FIG. 4D**, the another cross-section portion comprises a rectangular cross-section with a width W2 that is less than W1 and a height H2 is similar to height H1. By way of example, height H2 may be equal to height H1. In one embodiment, the another cross-section portion ACSP has a primitive cross-section that is similar to a cross-section near a front end of a SC connector.

[00121] Likewise, the rear portion RP may have more than one primitive cross-section shape over its length as desired. Moreover, rear portion RP may include one or more retention features or locking features that alter or modify the cross-section. For instance, housing 20 may also include locking feature 20L so that the connector may secured in an adapter, port or other suitable device. For instance, locking feature 20L may comprise features integrated into the housing such as one or more of a groove, a shoulder such as shown in **FIG. 4E** and **FIG. 45**, a scallop such as shown in the housing 20 of **FIG. 3,** a reverse bayonet such as depicted in **FIG. 44,** or a ramp with a ledge as shown in **FIG. 63**. In these examples, the locking features 20L advantageously are integrated into the

housing 20 and do not require extra components and may be used with any of the disclosed concepts. In some embodiments, the locking features 20L are subtractive portions from the primitive geometry of the rear portion RP such as a notch in the round rear portion RP. Consequently, having the locking features integrated into the housing 20 (e.g., monolithically formed as part of the housing) may allow denser arrays of connectors in complimentary devices. Moreover, these locking features integrated into the housing 20 are rearward of the sealing location of connectors 10. For example, the integrated locking features of housing 20 are disposed rearward of at least one groove 20G that seats O-ring 65. Locking feature 20L may cooperate with features of a complimentary mating device for securing the mating of the connector 10 with the complimentary mating device.

[00122] Housing 20 may also have features that aid in the proper alignment or orientation of the connector with the complimentary device such as markings, keys, keyways, etc. without changing the primitive form-factors of the housings that are disclosed and claimed herein. Additionally, housing may have other features for mating with a complimentary device or threads for securing a dust cap. **FIG. 2** is a perspective view of connector 10 with a housing 20 similar to the housing 20 depicted in **FIG. 4**, but it further includes threads 28 and keying feature 20K. **FIGS. 25 and 26** depict a fiber optic connector similar to **FIG. 20** having an alternative housing 20A that may be used with any suitable fiber optic connector disclosed herein. Housing 20 further comprises a keying feature 20K. Keying feature 20K has a predetermined location with respect to an orientation of housing 20 for aligning the form-factor of the housing with a respective mating device. For instance, the housing 20 or keying feature 20L provides a proper orientation for connection in one orientation, which may be desired for connectors having angled ferrules. In this embodiment, keying feature 20K ensures correct rotational orientation of the connector 10 during insertion and mating with another device.

[00123] In this particular embodiment, housing 20 is monolithically formed; however, other embodiments could have designs where the housing was formed from one or more components as desired. Housing 20 having a plurality of components could be assembled by snap-fitting, adhesive, welding or the like. Illustratively, **FIGS. 39 and 40** depict a housing 20 having a plurality of components.

[00124] Returning to the description of connector 10 of **FIG. 3** and its components, **FIG. 5** is an exploded view of ferrule subassembly 60 shown in connector 10 of **FIG. 3**. Ferrule subassembly 60 may have several different constructions as depicted herein and still practice the concepts disclosed. For instance, ferrule subassemblies 60 may use different ferrule carrier 40 constructions such as disclosed or desired while still practicing the concepts disclosed.

[00125] Ferrule 30 is a portion of ferrule subassembly 60. In these embodiments, an opening 21A at the rear end 21 of the housing 20 is sized for receiving a portion of the ferrule subassembly 60. When assembled, the ferrule subassembly 60 is configured to cooperate with the housing 20 for inhibiting the rotation of the ferrule subassembly 60 with respect to the housing 20. For instance, the ferrule subassembly may have a friction fit or interlocking structure that cooperates with the passageway 22 of the housing 20 that inhibits rotation of the ferrule subassembly 60 with respect to housing 20. However, in other embodiments the ferrule subassembly 60 may be free to rotate for tuning or the like until the ferrule subassembly 60 is fixed in position relative to housing 20 such as with an adhesive or the like.

[00126] As depicted in FIG. 5, ferrule subassembly 60 comprises a ferrule carrier and a resilient member 50. Some embodiments of the ferrule subassembly 60 may omit the resilient member 50 and not bias the ferrule 30 forward. If a resilient member 50 is used, ferrule carrier 40 may further comprise a resilient member pocket 46 as shown. As depicted, the resilient member pocket 46 may be configured for receiving the resilient member 50 in a direction transverse to a longitudinal direction of the ferrule carrier 40 (e.g., transverse to the optical fiber passageway) as represented by the arrow.

[00127] As shown in **FIG. 5**, ferrule carrier 40 comprises a ferrule carrier rear end 41, a ferrule carrier front end 43 and a ferrule carrier passageway 42 extending from the ferrule carrier rear end 41 to the ferrule carrier front end 43, where the ferrule carrier passageway 42 comprises a fiber buckling zone 47. The fiber buckling zone allows the optical fiber 92 to have room to move rearward during mating without causing undue optical attenuation. In other words, during mating the ferrule 30 may be pushed rearward slightly cause the optical fiber 92 of the cable 90 to deflect and in order to inhibit optical attenuation the fiber buckling zone 47 provided for allowing fiber movement.

[00128] Ferrule carrier 40 may have several different designs. In one embodiment, the ferrule carrier comprises a ferrule carrier front end 43 with the ferrule carrier front end 43 comprising at least one cantilevered portion such as shown in **FIG. 10**. Generally speaking, the at least one cantilevered portion extends from a medial portion of the ferrule carrier and allows the assembly of the ferrule 30 into the ferrule carrier 40. The at least one of the first cantilevered portion 43A may also be configured to cooperate with the housing 20 for inhibiting the rotation of the ferrule 39 with respect to the housing 20 when the ferrule subassembly 60 is fully-seated in the housing 20, and allow rotation of the ferrule 30 for tuning when the ferrule subassembly 60 is not seated in the housing 20.

[00129] By way of explanation and example, the front portion of the longitudinal passageway 22 of housing 20 may be sized for snuggly fitting to shoulders 43S disposed on the ferrule carrier front end 43 so that one or more of the cantilevered portions either squeeze the ferrule 30 and inhibit rotation or inhibit the deflection of the at least one cantileved portion so that the ferrule 30 is inhibited from rotating beyond its desired location. However, the ferrule carrier 40 still allows the ferrule 30 to "float" to the desired degree so it can translate such as in the rearward direction (i.e., z-direction) or X-Y directions for allowing the ferrule to move slightly to the desired location for precise alignment during mating. For instance, the ferrule 30 is biased and may "float" on the resilient member.

[00130] The use of the ferrule carrier described herein should not be confused with a ferrule holder that fixes a conventional ferrule directly to the ferrule holder so there is no appreciable movement between the ferrule and the ferrule holder. Conventional connectors allow the entire assembly of the ferrule holder/ferrule to be biased by a spring. On the other hand, embodiments such as depicted in **FIG. 3**, **FIG. 17** and FIG. **21** allow the ferrule to float without using a ferrule holder. Moreover, the use of the ferrule holder/ferrule assembly is another component interface where stack-up of tolerances may exist and impact geometry. Consequently, connectors disclosed herein may eliminate the conventional ferrule holder along with the expense and manufacturing time required by using a conventional ferrule holder.

[00131] **FIG. 5** depicts the ferrule carrier front end 43 comprising a first cantilevered portion 43A and a second cantilevered portion 43B. **FIGS. 6 and 7** are longitudinal

sectional views of ferrule subassembly 60 of **FIG. 3** showing details of the design and assembly. **FIGS. 8 and 9** respectively are a perspective view and close-up perspective view of ferrule carrier 40 of **FIGS. 5-7** depicting details of the ferrule carrier.

[00132] In this embodiment, at least one of the first cantilevered portion 43A or the second cantilevered portion 43B are configured to cooperate with the housing 20 for inhibiting the rotation of the ferrule 30 with respect to the housing 20 when the ferrule subassembly 60 is fully-seated in the housing 20, and allow rotation of the ferrule 30 for tuning when the ferrule subassembly is not seated in the housing 20. By way of explanation, ferrule carrier front end 43 of FIG. 5 may be sized to cooperate with the housing 20 by fitting into a passageway 22 that inhibits the cantilevered portions 43A,43B from deflecting outwards, thereby inhibiting the rotation of the ferrule 30 with respect to the ferrule carrier 40 when the ferrule carrier front end 43 is fully-seated in the housing 20 since some of the selectively tunable surfaces 36 (in this case the planar surfaces 36S) of ferrule 30 cooperate with ferrule retention structure 43C of the ferrule carrier 40.

[00133] Ferrule subassembly 60 is assembled by placing the resilient member 50 into the resilient member pocket 46 by inserting the spring in the transverse direction to the ferrule carrier passageway as best shown in **FIG. 5**. Ferrule carrier 40 of FIG. 5 allows ferrule 30 to be inserted from the ferrule carrier front end 43 as represented by the arrow. As ferrule 30 is inserted into the ferrule carrier front end 43 the first cantilevered portion 43A and the second cantilevered portion 43B deflect outward as represented by the arrows shown in **FIG. 6**. As the ferrule 30 is seated in the ferrule carrier front end 43 the first cantilevered portion 43A and the second cantilevered portion 43B spring back toward their original positions to capture the ferrule 30. As best shown in **FIGS. 7 and 9**, one of the first cantilevered portions 43A or the second cantilevered portions 43B comprise a ferrule retention structure 43C. Consequently, when the first and second cantilevered portions 43A,43B are inhibited from deflecting, then ferrule 30 is inhibited from rotating such as when the ferrule subassembly 60 is fully-seated within housing 20. However, when the first and second cantilevered portions 43A, 43B are allow to deflect outwards such as shown in FIG. 6, then the ferrule 30 may be rotated thru any desired angle θ for tuning.

[00134] Further, the rear end of ferrule carrier 40 may have other features that allow tuning if desired. For instance, ferrule carrier rear end 41 may have a ferrule carrier groove 41G or shoulder for cooperating with the cable adapter 59, thereby allowing rotation between the two components in either step increments or infinite increments as desired and discussed herein. By way of example, ferrule carrier 40 may comprise one or more ferrule carrier rotational keys 41K to allow rotational step increments or the ferrule carrier 40 may omit ferrule carrier rotational keys 41K and allow infinite rotational positions relative to the cable adapter 59, which may be keyed to the rear end 21of housing 20. Ferrule carrier 40 may be attached to cable adapter in any suitable manner such as adhesive, welding, mechanical fitment, etc.

[00135] Other embodiments may integrate the ferrule carrier 40 and cable adapter 59 into a monolithic component. However, using separate cable adapter 59 allows the connectors 10 to be adapted to different cables such as round, flat, different sizes by merely selecting the appropriate sized cable adapter 59 for the desired cable type. Additionally, cable adapter may include one or more flexures 59F at the rear portion for providing cable bending strain-relief if desired instead of using a conventional boot. The flexures as depicted are suitable for flat cables that have a preferential bend-characteristic.

[00136] Again, the connectors disclosed herein may allow the ferrule 30 to have a small amount of “float” within ferrule carrier or housing without using a ferrule holder like conventional fiber optic connectors. Conventional connectors mount the ferrule within a ferrule holder in a fixed position and then typically the ferrule holder is biased by a spring. On the other hand, some of the connector designs disclosed by the present application have the resilient member 50 directly bias the ferrule, which eliminates parts and also allows more flexibility for ferrule selection or tuning. Moreover, the ferrule may be tuned relative to the ferrule carrier or the housing depending on the connector design. Further, the high precision geometry ferrule holder is eliminated along with the tolerance stack-up using a conventional connector with a ferrule holder. However, the housings concepts disclosed herein may be used with connectors having ferrule holders such as disclosed in **FIGS. 70-78**.

[00137] Ferrule retention structure 43C is configured to cooperate with geometry on ferrule 30. Specifically, ferrule 30 depicted in **FIG. 5** has at least one selectively tunable surface 36 that cooperates with the ferrule retention structure 43C. Ferrule retention structure 43C is sized for snugly-fitting to one or more selectively tunable surfaces 36 of ferrule 30 as shown in **FIG. 7**. However, when the ferrule carrier 40 is not seated in housing 20, the ferrule 30 may be rotated within ferrule carrier 40 about an angle θ for optically tuning the assembly. Ferrule 30 may have a round selectively tunable surface 36 for infinite tuning, but that requires a tight fit between the ferrule carrier front end 43 and the appropriate portion of the passageway 22 of the housing 20. If the ferrule 30 uses selectively tunable surfaces 36 comprising a plurality of planar surfaces 36S, then the appropriate portion of the passageway 22 merely has to inhibit deflection of the at least one cantilever arm so that the ferrule 30 is inhibited from rotation when fully assembled. **FIGS. 8 and 9** depict detailed views of the ferrule carrier 40 of **FIG. 5**. As depicted, the first and second cantilevered portions 43A, 43B of ferrule carrier 40 may have stepped down portions forward of shoulder 43S, thereby allowing robust seating and inhibiting of deflection of the cantilevered arms 43A, 43B.

[00138] Ferrule 30 may have any suitable number of plurality of planar surfaces 36S as desired. By way of explanation, four planar surface 36S allows quadrant tuning and further planar surfaces allows finer tuning in a first-stage. However, ferrules 30 may have any number of planar surfaces as desired such as six or eight planar surfaces to increase the number of steps for tuning the ferrule. Generally speaking, quadrant tuning is sufficient and if coupled with an infinite second-stage tuning interface, then the connector advantageously may be tuned to any desirable rotational position in a quick and easy manner during manufacturing.

[00139] **FIG. 10** is a perspective view of an alternative ferrule carrier 40' that may be used in the ferrule subassembly 60 and **FIGS. 11 and 12** respectively are a partially exploded view and an assembled view of the alternative ferrule carrier 40' in ferrule subassembly 60. This ferrule carrier 40' is similar to ferrule carrier 40, but only has first cantilevered arm, and requires loading of the ferrule 30 from the transverse direction like the resilient member 50. Ferrule 30 may still be rotated with respect to ferrule carrier 40', but it may require a slightly larger rotational force to deflect the U-shaped portion or

a slightly upward translation of the ferrule 30 to help reduce the rotational force required for the rotation.

[00140] **FIGS. 13 and 14** respectively are a partial sectional view and a cross-sectional view of the alternative ferrule carrier 40' of **FIGS. 10-12** depicted assembled into ferrule subassembly 60 and disposed in housing 20 of fiber optic connector. As depicted, the passageway 22 of housing 20 may include different geometry for seating the ferrule subassembly 60 within the housing and inhibiting the rotation of ferrule 30 relative to the housing 20 using the alternative ferrule carrier 40'. As depicted, housing 20 comprises a passageway 22 with an internal key 20KI that cooperates with the U-shaped portion of the alternative ferrule carrier 40'. Consequently, the alternative ferrule carrier is inhibited from further rotation with respect to the housing 20.

[00141] **FIG. 17** is an exploded view of another cable assembly 100 that is similar to the cable assembly 100 of **FIG. 2** with a fiber optic connector having a different ferrule subassembly 60 and **FIG. 18** is a partially exploded view of the cable assembly 100 of **FIG. 17** with the fiber optic cable attached to the ferrule subassembly 60. This cable assembly 100 comprises a connector 10 that has a ferrule carrier 40 that is monolithically formed with the cable adapter as depicted. Otherwise, the cable assembly 100 is similar to the cable assembly 100 of **FIG. 2**.

[00142] The concepts disclosed herein may be used with other types and designs of connectors. For instance, **FIGS. 19-43** and **FIGS. 46-53** disclose connectors where ferrule 30 is inserted from a front end 23 of the connector 10. These connectors designs are depicted without a ferrule holder as generally discussed herein, but may be used with a ferrule holder if desired. These connector designs are different from the earlier connector designs since they do not use a ferrule carrier; however, these designs can still be optically tuned if desired. Specifically, these connector designs comprise a ferrule 30 that "floats" relative to the housing 20 and uses a different structure for securing the ferrule while allowing the ferrule float. Any suitable housings 20 as described herein may be used for these connectors so long as they are suitably modified for securing the ferrule 30 as disclosed in more detail below.

[00143] Illustratively, **FIGS. 19 and 20** are perspective views of cable assembly 100 having a different fiber optic connector 10 with housing 20 that is similar to the housing

shown with the fiber optic connector of **FIG. 2**, but having ferrule 30 that loads from the front end 23 of housing 20 and secured a transverse ferrule retention member 140. **FIG. 21** is an exploded view of another cable assembly 100, that is similar to that of **FIG. 19** with the connector having a housing having threads on the housing that are discontinuous. **FIG. 22** is an perspective assembled view of the cable assembly 100 of **FIG. 21** and **FIG. 23** is a perspective view of the cable assembly 100 of **FIG. 22** with a dust cap 70 installed. **FIG. 24** is a longitudinal sectional view of the cable assembly 100 of **FIG. 22** in a vertical direction and **FIG. 29** is a longitudinal sectional view of a front portion of the fiber optic connector 100 in a horizontal direction.

[00144] With reference to **FIG. 21**, connector 10 comprises housing 20, ferrule 30 and transverse ferrule retention member 140. Housing 20 is similar to the other housings disclosed herein, but further comprises an opening 129 in an outer surface that is transverse to the longitudinal passageway 22 of housing 20. The opening 129 is sized for receiving the transverse ferrule retention member 140 and securing the ferrule 30 in a manner that allows suitable movement so it may float as appropriate as depicted in **FIG. 24**. Connector 10 may also comprise a band 69 for securing a cable 90 to the connector if desired.

[00145] **FIG. 25** is a detailed exploded view of the front end of the cable assembly 100 of **FIG. 22** and **FIG. 26** is a cross-sectional view taken at the opening 129 of the housing 20 of **FIG. 19** showing transverse ferrule retention member 140 securing the ferrule 30. As depicted in **FIG. 25**, ferrule 30 is loaded into the passageway 22 of housing 20 from the front end 23 and secured by the cooperation of the ferrule 30 with the transverse ferrule retention member 140 that is inserted into opening 129 for cooperating with at least one surface of the ferrule 30. Specifically, ferrule 30 is inserted into the passageway 22 until the cooperating surface such as a ferrule retention feature aligns with the opening 129 so that the transverse ferrule retention member 140 may engage the surface and securing the ferrule. Additionally, the at least one surface of the ferrule 30 that serves as the ferrule retention feature cooperates with the transverse ferrule retention member 140 is sized relative to the transverse ferrule retention member so that the ferrule 30 may float. The ferrule retention feature may also be the same feature as the at least one selectively tunable surface 36.

[00146] In this embodiment, ferrule has at least one selectively tunable surface 36 so that ferrule 30 may have at least two rotational orientations with respect to the housing 20 (and which acts as the ferrule retention feature). However, ferrules 30 may have any suitable numbers of selectively tunable surfaces 36 so the ferrule 30 may have the desired number of rotational positions for tuning the ferrule. By way of example, ferrule may have four, six, eight or any suitable number of selectively tunable surfaces 36 as desired. More specifically, the longitudinal passageway 22 of housing 20 extending from the rear end 21 to the front end 23 also comprises a tuning pocket 24 in cooperation with the longitudinal passageway 22. The tuning pocket 24 allow the rotation or manipulation of the ferrule 30 within the housing as needed. In this embodiment, the transverse ferrule retention member 140 is secured to the housing 20 using a pair of catches 140C disposed on the arms of the transverse ferrule retention member 140. Catches 140C may snap-fit to portions of the housing 20 disposed in opening 129 such ledges. However, other variations for securing the ferrule 30 are possible. By way of example, **FIGS. 27 and 28** respectively depict a detailed view of an alternative transverse ferrule retention member 140 having catches 140C and cross-sectional view showing the alternative transverse ferrule retention member 140 for securing ferrule 130. As best depicted in **FIG. 27**, the catches 140C are disposed on a medial portion of the arms of this alternative transverse ferrule retention member 140. Consequently, the catches 140C cooperate with a portion of ferrule 30 as depicted in **FIG. 28**, instead of the housing 20 as depicted in **FIG. 26**. **FIG. 29** is a sectional view of a portion of the housing 20 having a width of opening 129 being larger than the width of the transverse ferrule retention member 140 so that the ferrule 30 may float. FIG. 30 is a sectional view depicting tuning pocket 24 of housing 20 that allows rotational tuning of the ferrule 30 during manufacture for improving optical performance. Specifically, when transverse ferrule retention member 140 is disengaged, then the ferrule 30 may be rotated relative to the ferrule. As depicted, tuning pocket 24 allows ferrule 30 to be rotated by a suitable angle θ for optical tuning to a preferred rotational position as represented by the arrow. By way of example, ferrule 30 may be rotated by an angle θ of ± 180 degrees, but other suitable angles are possible.

[00147] **FIGS. 31 and 32** depict explanatory ferrules 30 having at least one selectively tunable surface 36. **FIG. 31** shows a ferrule that may be tuned to quadrants with four selectively tunable surfaces 36. Generally speaking, the selectively tunable surfaces 36 are configured as planar surfaces as shown. More specifically, the selectively tunable surfaces 36 are formed by a plurality of planar surfaces that are recessed on the ferrule 30. Finer tuning is possible with the concepts disclosed by having more selectively tunable surfaces such as six, eight, ten or twelve, thereby providing more rotational positions for securing the ferrule 30. **FIG. 32** depicts a ferrule 30 where the selectively tunable surfaces 36 are disposed adjacent to a free rotation portion 36A of the ferrule 30, thereby allowing rotation of the ferrule for tuning during assembly without removing the transverse ferrule retention member 140. By way of explanation, the ferrule 30 in FIG. 32 may be secured by transverse retention member 140 and when rotational tuning is required, then the ferrule 30 may be displaced rearward until free rotation portion 36A is aligned with the transverse retention member 140 allowing rotation of the ferrule in either direction and when the desired rotational position is reached the ferrule 30 is allowed to translate to the forward position where the selectively tunable portions 36 engage and cooperate with the transverse ferrule retention member 140 to inhibit rotation of the ferrule 30. Consequently, the transverse ferrule retention member 140 does not need to be removed from housing 20 for tuning.

[00148] **FIGS. 33-36** are various views of depicting the housing 20 of the connector 10 of **FIG. 23** comprising opening 129 and tuning pocket 24. As depicted, housing 20 is similar to the other housings and may be modified for the desired housing configuration as desired. For instance, although the housing 20 depicts threads 28 that are discontinuous for attaching dust cap 70 such as shown in **FIG. 23**, variations are possible that eliminate the threads 28 and use a push-on dust cap. Likewise, other variations to the housing 20 are possible such as changing the mating geometry and using the concepts disclosed with the mating geometry of the housing 20 depicted in **FIG. 54**. Further, housings 20 may have different retention features or different locking features 20L. By way of comparison, housing 20 of **FIG. 3** comprises a locking feature 20L disposed between rear end 21 and a front end 23 configured as a scallop and the locking feature

20L of the housing of **FIG. 4** is configured by a shoulder. The shoulder comprises an enlarged annular portion 126 with a flat surface on the rear side.

[00149] By way of example, **FIG. 37** is a perspective view of another cable assembly 100 with still another alternative connector 10 that is similar to connector 10 of **FIG. 19**, but further comprises multi-piece housing 20 comprising a nosepiece 160. **FIG. 38** is a perspective view of the cable assembly 100 with dust cap 70 and **FIG. 39** is an exploded view of the cable assembly 100.

[00150] As best depicted in **FIG. 39**, the connector 10 comprises a housing 20 having nosepiece that fits about a front end 23. In this configuration, using the separate nosepiece 160 provides more access to the passageway 22 of the housing and allows more room and vision for assembly. Moreover, the opening 129 is disposed in a location that is covered by nosepiece 160 so that once the connector is tuned and the nosepiece 160 is secured the transverse ferrule retention member is not visible or accessible. Housing 20 of this embodiment also has a different locking feature 20L compared with the housing depicted in **FIG. 33-36** and an aperture 29. Locking feature 20L is configured as a groove for receiving a clip or other suitable locking feature from a complimentary device for retaining the connector in a mated state when secured. This embodiment of the connector also use cable adapter 59 so that the connector may accommodate different cable types by using the appropriately sized cable adapter for the given cable 90.

[00151] **FIG. 40** is a front end sectional view of the connector 10 of **FIG. 37** showing the nosepiece 160 attached to the front end of housing 20 and **FIG. 41** is a front end view of the housing showing an attachment interface (not numbered) such as a weld interface disposed on a front portion of the housing 20. As depicted in FIG. 40, once the nosepiece 160 is installed it inhibits the removal of the transverse ferrule retention member 140. In other words, the transverse ferrule retention member 140 is not visible, nor is it accessible once the nosepiece is installed. Consequently, once the connector is tuned and the nosepiece is suitable installed, the transverse ferrule retention member 140 is tamper-resistant. The attachment interface of the housing provides a surface for attaching nosepiece 160. Nosepiece 160 may be attached in any suitable manner such as adhesive, friction-fit, snap-fit, welding or the like as desired. In one embodiment, the nosepiece

160 is formed from a translucent material. Using a translucent material for nosepiece 160 allows the use of a UV curable epoxy for securing the nosepiece 160.

[00152] Still other variations of connectors are possible using modified housings or other modified components. **FIGS. 42 and 43** are perspective and side views of a connector 10 similar to **FIG. 37** having an alternative housing 20. Housing 20 in this embodiment does not have an offset distance among transition portions TP1-TP4. In other words, all of the transition portions TP1-TP4 are aligned. Additionally, this housing 20 comprises keying feature 20K for orienting the connector for mating. Keying feature 20K is a key, but other embodiments may use other suitable structure such as a keyway or the like.

[00153] Other variations of housings disclosed herein are also possible such as having other shapes for the rear portion RP such as a polygon cross-section PCS, instead of the round cross-section RCS. Polygon cross-sections may have any suitable number of side such as four, five, six, seven or eight, but other suitable number of sides are also possible. Still other variations are possible with the housing concepts disclosed. For instance, the housing 20 of the connectors may be configured to work with other devices so that a retention feature or locking feature of the connector is intended to cooperate with different devices for maintaining the optical connection at the mating interface. By way of example, **FIGS. 44 and 45** are perspective views of portions of alternative housings 20 depicting other locking feature designs. The housings 20 depicted in **FIGS. 44 and 45** may be used with any suitable connectors disclosed herein. Likewise, locking or retention features may be selected with other features such as keying features 20K. Keying feature 20K has a predetermined location with respect to an orientation of housing 20 for aligning the connector form-factor with a respective mating device. Specifically, the housing 20 provides a proper orientation for connection in one orientation, which may be desired for angled ferrules. In this embodiment, keying feature 20K is disposed on a center line of fiber optic connector 10 and ensures correct rotational orientation during insertion and mating with another device.

[00154] Components or features of connectors may be selected as desired to form other variations of connectors. Illustratively, **FIG. 46** is a perspective view of still another cable assembly 100 using a connector similar to the connector of **FIG. 37**, but

having a different cable adapter 59. The connector also has a different type of locking feature 20L than the housing 20 of the connector of **FIG. 37**. Like the cable adapter 59 of **FIG. 37**, the cable adapter 59 of this embodiment that fits into a rear opening 21A of the housing 20. As discussed, using connectors with a separate cable adapter 59 allows the connector to be used with different types cables by merely changing out and selecting the cable adapter that is suitable for the desired cable 90. **FIGS. 47 and 48** respectively are a perspective view and a cross-sectional view the cable adapter 59 of **FIG. 46**. **FIG. 49** is a vertical sectional view and **FIG. 50** is a horizontal sectional view of the rear portion of cable assembly 100 showing the cable 90 disposed within the cable adapter 59.

[00155] **FIGS. 47A and 48A** are a perspective view and a cross-sectional view of another cable adapter 59, that is similar to the cable adapter of **FIG. 47**. As depicted, cable adapters 59 may comprise an aperture 59A, a recessed surface 59R, a shoulder 59S, a passageway 59P, and a cable saddle 59C or a cable adapter key 59K as desired for any particular embodiment of cable adapter 59. Generally speaking, cable adapter 59 comprises passageway 59P from a cable adapter front end 59F to a cable adapter rear end 59R. Passageway 59P allows the optical fiber 92 of cable 90 to pass therethrough. Shoulder 59S allows cable adapter 59 to have a snug-fit within the passageway 22 of housing 20 and inhibits adhesive from wicking or flowing forward of the shoulder 59S. Any adhesive or epoxy used for securing cable adapter 59 may wick around the recessed surface 59R for creating a sufficient bonding area and any excessive adhesive or epoxy may flow into the aperture 59A. Housings 20 may include one or more aperture 29 for injecting epoxy or adhesive or the adhesive or epoxy may be placed on the cable adapter before insertion into the housing. For instance, housing may include two apertures 29 such as show in **FIG. 49** so that air may escape as adhesive or epoxy is injected. Additionally, the one or more apertures 29 may be aligned with the apertures 59A of the cable adapter so that the adhesive or epoxy also secures the strength members 94 of cable 90 to the cable adapter 59 that is secured to the housing 20, thereby forming a robust cable/connector attachment and also providing sealing at the rear end. Cable saddle 59C is sized and shaped for the particular cable 90 that is intended to be secured using the cable adapter along with the appropriate components as appropriate such as depicted in **FIG. 50**. The rear portion of the cable adapter 59 may have a cable bend relief area such

as a reverse funnel at entrance to the passageway, flexures or other suitable structure for inhibiting sharp bending of the cable near the rear of the cable adapter 59. Further, cable adapters 59 may or may not include keys 59K as desired for cooperating with features of the housing. The rear portion 59R of the cable adapter 59 of **FIG. 47A** comprises one or more ribs 59RB suitable for receiving a boot or overmold on the rear portion 59R. The ribs 59RB aid in the retention of the boot or overmold.

[00156] **FIG. 51** is perspective view of another cable assembly 100 according to the concepts disclosed and **FIG. 52** is an exploded view of the cable assembly 100. Housing 20 of this embodiment is similar to the housing disclosed herein, but further comprises a keying portion 20KP thats extend into the transition region TR as shown. In this embodiment, the keying portion 20KP is configured as a female key or subtractive portion on housing 20. The keying portion 20KP cooperates with a suitable keying portion in a connection port of a device such as an additive or male portion for inhibiting non-compliant connectors from being inserted into the connection port. In other embodiments, keying portion 20KP may be arranged as a subtractive portion that removes a side or slice of the housing 20 for creating a D-shaped cross-section over the length of the keying portion 20KP.

[00157] The internal construction of connector 10 of **FIG. 52** is similar to that of **FIGS. 70-78** where ferrule 30 disposed within a ferrule holder 49 and inserted from a front end 23 of the connector 10 and is discussed in more detail in relation to those **FIGS.** This embodiment also comprises a boot or overmold 259 disposed on the rear portion 59R of cable adapter 59 as best shown in **FIG. 53**. Further, when assembled a sealing element such a heat shrink 99 is disposed over the boot or overmold 259 as best shown in **FIG. 54**. The sealing element may also be disposed over a portion of the housing 20 as shown. Placing the sealing element over boot or overmold and a portion of the housing 20 allows for sealing of the cable jacket to the rear of the connector. This may also improve the bending strain-relief for the cable assembly. **FIG. 51A** is a rear perspective view of another cable assembly having cable adapter 59 with flexures 59F for bend-strain relief. **FIGS. 52A and 53A** are a side and sectional views of the cable assembly of **FIG. 51A** showing heat-shrink 99 before and after being installed. As depicted, if the cable adapter 59 uses flexures 59F they are generally aligned with the flat portions of cable 90

for cable bend relief. Also the cable adapter 59 may or may be able to have more than one rotational position with respect to the housing 20 depending on how the ends of the components cooperate or not. As depicted in **FIG. 53A**, housing 20 may have a stepped down portion at the rear end 21 for receiving a portion of heat shrink 99 and may cover the flexures 59F while also providing further cable bending strain-relief.

[00158] Still other variations of housings 20 are possible using the connector concepts disclosed herein. The other connector embodiments disclosed included locking features 20L that were integrated into the housing 20; however, other connectors may use locking features that are separate and distinct components from the housing 20. Although this may require a bigger connector footprint or more access space between connectors the concepts of separate and distinct components for the locking features are possible. **FIG. 54A** is a front perspective view of another housing 20 that may be used with the fiber optic connector concepts disclosed herein. In this embodiment, the securing feature 20L is formed on a separate and distinct component from the housing 20. Specifically, securing feature 120L is disposed on a coupling nut 120 having threads and that rotates about an outer shaft of housing 20 for securing the connector to a complimentary device. Additionally, the housing 20 may not have offset distance between transition portions of the housing 20 such as depicted in this embodiment.

[00159] Connectors disclosed herein may be portions of other cable assemblies as desired. For instance, **FIG. 55** depicts a distribution cable 100' having one or more connectors 10 on tether cables 90' that extend from a mid-span access 93 of a distribution cable. Of course, other suitable assemblies may use the connectors according to the concepts disclosed herein.

[00160] By way of example, connectors disclosed herein may be converted from a first connector footprint to a second connector footprint. **FIG. 56** is a perspective view of an explanatory connector 10' that further comprises a conversion housing 80 attached about the housing 20 for changing the connector 10' from a first connector footprint to a second connector footprint and **FIG. 57** is a sectional view of the connector 10'. By way of example, the connector 10' may have a first connector footprint such as shown in **FIG. 19** and be changed to a second connector footprint such as a SC connector by adding conversion housing 80. However, any of the suitable connectors disclosed herein may be

converted as described herein. Conversion housing 80 cooperates with housing 20 for changing from the first connector footprint to the second connector footprint. In this embodiment, the changing of the first connector footprint to the second connector footprint comprises the use of a single component.

[00161] In other embodiments, the changing of the first connector footprint to the second connector footprint may comprise the use of a plurality of components. Illustratively, **FIG. 58** is a partially exploded view of another connector 100' that may be changed from a cable assembly 100 having first connector footprint 10 to a second connector footprint 10' as shown assembled in **FIG. 59**. Further, this embodiment of the second connector footprint 10' comprises a hardened connector footprint. Hardened connector footprint means that the connector is suitable for outdoor environments without be protected within a closure. Any suitable connector 10 disclosed herein may be used for such a conversion from the first footprint to the second footprint. **FIG. 58** depicts cable assembly 100 with connector 10 with the plurality of components for the conversion to the second footprint exploded for depicting the assembly of the components. In this particular embodiment, the plurality of components are suitable for converting connector 10 to a hardened OptiTap® compatible connector; however, the plurality of components may be configured for converting connector 10 into other hardened connectors as desired. In this embodiment, the plurality of components for the conversion to the hardened connector comprise an inner boot 83, an outer boot 87, a conversion housing 82 configured as a shroud, a retaining member 84 configured as a retaining nut and a coupling nut 85. To make the conversion to the hardened connector, the inner boot 83 is slid over up over part of connector 10 and the conversion housing or shroud 82 is slid rearward into position and then the retaining nut 84 is secured to the threads of connector 10. The coupling nut 85 is slid onto shroud 82 and then outer boot 87 can be slid-up into position from the rear. Shroud 82 may include an O-ring 86 for sealing during mating. **FIG. 60** is an assembled view of the fiber optic connector of **FIG. 58** showing the hardened second connector footprint with the dust cap 88 installed thereon. **FIG. 61** is a sectional view of the hardened connector of **FIG. 60.**

[00162] **FIGS. 62-65** are various views of the another housing 20 of the connector 10 suitable for receiving a ferrule disposed in a ferrule holder. Housing 20 is similar to the

housings 20 disclosed herein, but further comprises one or more latch arms 20LA disposed in a front portion FP of housing 20 as depicted. Moreover, the front opening of passageway 22 is sized for allowing the insertion of ferrule holder 49 from the front end 23 of housing 20 such as shown in the cross-section of **FIG. 63**. Latch arms 20LA are connected at the front end and cantilevered at the rear end so they can be deflected when ferrule holder 49 is inserted and then spring back to retain the ferrule holder 49 once it is fully-inserted. **FIG. 62A** is bottom perspective view of the connector 10 showing the locking feature 20L of housing 20 configured as a ramp (not numbered) with a ledge (not numbered) as the retaining feature for cooperating with a suitable securing feature of a device.

[00163] **FIG. 66** is a partially exploded view of the front end of connector 10 prior to the ferrule holder 49 and ferrule 30 being inserted into housing 20. **FIG. 67** is a cross-sectional view of the front end of the connector 10 after the ferrule holder 49 and ferrule 30 are inserted into housing 20 and retained by latch arms 20LA. As depicted, latch arms 20LA have ramp portions for aiding portions of ferrule holder 49 to deflect the latch arms 20LA outward as the ferrule holder 49 is inserted into housing 20 and then spring back over ferrule holder 49 for retaining the same.

[00164] Referring to **FIG. 66**, optical fiber 92 of cable 90 is assembled to extend past the front end 23 and resilient member 50 is threaded about optical fiber 92 and then the ferrule holder 49 and ferrule 30 are threaded over optical fiber 92. Optical fiber 92 may be clamped in a suitable manner through bores 20C disposed on opposite side of housing 20 as represented by the arrows in **FIG. 67** when ferrule holder 49 is being inserted into housing 20. Clamping optical fiber 92 inhibits the optical fiber 92 from pushing rearward or buckling as ferrule holder 49 inserted. Ferrule holder 49 is aligned to a suitable rotational position and pushed rearward into housing 20 until retained by latch arms 20LA as depicted in **FIG. 67**. Optical fiber 92 is secured to ferrule 30 in a suitable fashion and the end face of ferrule 30 is polished.

[00165] Additionally, ferrule holder 49 may be configured for tuning ferrule 30 relative to housing 20. **FIG. 68** is a perspective detailed view of the ferrule 30 disposed in ferrule holder 49. As shown, ferrule holder 49 comprises a plurality of recesses 49R formed in flange 49F for tuning of the connector. In this embodiment, flange 49F has

four recesses 49R allowing four different rotational positions for ferrule holder 49/ferrule 30, thereby allowing quadrant tuning. **FIG. 69** is a detailed front end view of the connector 10 showing that the front opening of housing 20 is sized for allowing the insertion of the ferrule holders. Additionally, a portion of the passageway 22 is sized to cooperate with the flange 49F and allow different rotational positions. Consequently, after measurement of the end face profile of the ferrule 30 or measurement of the insertion loss, the ferrule 30 may be tuned if desired for improving performance such as to a Grade B standard. By way of explanation, the latch arms 20LA may be deflected outward to release the ferrule holder 49 and then the ferrule holder 49 is rotated to the desired position and inserted back into the housing 20 until it is retained by latch arms 20LA. Other embodiments of ferrule holder 49 may have other suitable numbers of rotational positions as desired.

[00166] **FIG. 70** is a partially exploded view of connector 10 similar to the connector of **FIG. 62A** being converted to a second connector footprint. This particular conversion uses a plurality of components for converting connector 10 to a hardened OptiTap® compatible connector; however, the plurality of components may be configured for converting connector 10'' into other hardened connectors as desired. The plurality of components for the conversion to connector 10'' comprise the conversion housing 82 configured as shroud, a retaining member 84 configured as a retaining clip, and a coupling nut 85. Shroud 82 may include one or more O-rings 86 for sealing during mating with a complimentary device.

[00167] To make the conversion to the connector 10'', the shroud 82 is slid into a passageway of coupling nut 85 as shown and then slid over connector 10 from the front end. Next, the shroud 82 is rotated so that the internal threads 82T of shroud 82 as best shown in **FIG. 71** engage with the threaded portion TP of connector 10 until the shroud 82 is secured to connector 10. Thereafter, retaining member 84 is aligned with the front end of the shroud 82 and then pushed onto the connector 10 until it is seated and retained on housing 20, thereby inhibiting the shroud 82 from backing off the threaded portion TP of connector 10 as depicted in **FIG. 72**.

[00168] **FIG. 73** is a detailed sectional view of the front end of connector 10'' showing the retaining member 84 secured to connector 10 and **FIGS. 74 and 75** are

perspective views of the retaining member 84. As depicted, retaining member 84 comprises an opening 84O at the front for receiving a portion of housing 20 therethrough when installed. Additionally, retaining member 84 also has a front flange 84F shaped to the passageway of shroud 82 so it may be inserted and engage connector 10. Retaining member 84 may also include one or more keyways 84K for allowing the retaining member to slide past keying feature 20K of connector 10. Windows 84W disposed on opposite sides of retaining member 84 engage with ears 27 of housing 20 for securing the retaining member 84 to connector 10. Once installed, retainer member 84 inhibits the shroud 82 from rotating and coming off connector 10. Connector 100'' may also include a dust cap 88 like connector 10' of **FIG. 60**.

[00169] Other variations of the housing 20 for connectors 10 is also possible. **FIGS. 76 and 76A** depict perspective view and cross-sectional views of another connector housing that may be used with any of the suitable concepts disclosed. In this embodiment, the rear portion RP is non-round, and has a polygonal cross-section PCS as shown by the cross-section in **FIG. 76A**. **FIG. 76A** shows that this housing 20 may have a keying feature 20K which may take any suitable form or may a keying portion 20KP as desired. Likewise, this housing 20 may use any suitable locking feature 20L as desired.

[00170] Although the disclosure has been illustrated and described herein with reference to explanatory embodiments and specific examples thereof, it will be readily apparent to those of ordinary skill in the art that other embodiments and examples can perform similar functions and/or achieve like results. All such equivalent embodiments and examples are within the spirit and scope of the disclosure and are intended to be covered by the appended claims. It will also be apparent to those skilled in the art that various modifications and variations can be made to the concepts disclosed without departing from the spirit and scope of the same. Thus, it is intended that the present application cover the modifications and variations provided they come within the scope of the appended claims and their equivalents.

We claim:

1. A fiber optic connector (10'), comprising:

a housing (20) comprising a rear end (21) and a front end (23) with a longitudinal passageway (22) extending from the rear end (21) to the front end (23), wherein a part of the rear portion (RP) of the housing (20) comprises a round cross-section (RCS) and a part of the front portion (FP) of the housing (20) comprises a non-round cross-section (NRCS) with a transition region (TR) disposed between the rear portion (RP) and the front portion (FP), wherein the transition region (TR) comprises a threaded portion (TP), and the housing (20) provides a first connector footprint;

a ferrule (30) comprising a fiber bore (32) extending from a rear end (31) to a front end (33); and

a conversion housing (80, 82), wherein the conversion housing (80, 82) cooperates with the housing (20) for changing the fiber optic connector (10') from the first connector footprint to a second connector footprint.

2. The fiber optic connector of claim 1, wherein the threaded portion (TP) extends from the non-round cross-section (NRCS) to the round cross-section (RCS).

3. The fiber optic connector of claims 1 or 2, wherein the threaded portion (TP) is adjacent to a keying feature.

4. The fiber optic connector of any one of claims 1-3, wherein the front portion (FP) of housing (20) comprises another cross-section portion (ACSP).

5. The fiber optic connector of claim 4, wherein the another cross-section portion (ACSP) comprises a SC footprint.

6. The fiber optic connector of any one of claims 1-5, wherein the ferrule (30) is a portion of a ferrule subassembly (60), and an opening (21a) at the rear end (21) of the housing (20) is sized for receiving a portion of the ferrule subassembly (60).

7. The fiber optic connector of claim 6, wherein the ferrule subassembly (60) is configured to cooperate with the housing (20) for inhibiting the rotation of the ferrule subassembly (60) with respect to the housing (20).

8. The fiber optic connector of claims 6 or 7, wherein the ferrule subassembly (60) comprises a ferrule carrier (40).

9. The fiber optic connector of claim 8, further comprising a resilient member (50), and wherein the ferrule carrier (40) further comprises a resilient member pocket (46).

10. The fiber optic connector of claim 9, wherein the resilient member pocket (46) is configured for receiving the resilient member (50) in a direction transverse to a longitudinal direction of the ferrule carrier(40).

11. The fiber optic connector of any one of claims 8-10, wherein the ferrule carrier (40) comprises a ferrule carrier rear end (41), a ferrule carrier front end (43) and a ferrule carrier passageway (42) extending from the ferrule carrier rear end (41) to the ferrule carrier front end (43), wherein the ferrule carrier passageway (42) comprises a fiber buckling zone (47).

12. The fiber optic connector of any one of claims 8-10, wherein the ferrule carrier (40) comprises a ferrule carrier front end (43), the ferrule carrier front end (43) comprising at least a first cantilevered portion (43a).

13. The fiber optic connector of claim 12, wherein the at least one of the first cantilevered portion (43a) is configured to cooperate with the housing (20) for inhibiting the rotation of the ferrule (30) with respect to the housing (20) when the ferrule subassembly (60) is fully-seated in the housing (20), and allow rotation of the ferrule (30) for tuning when the ferrule subassembly (60) is not seating in the housing (20).

14. The fiber optic connector of any one of claims 8-10, wherein the ferrule carrier (40) comprises a ferrule carrier front end (43), the ferrule carrier front end (43) comprising a first cantilevered portion (43a) and a second cantilevered portion(43b).

15. The fiber optic connector of claim 14, wherein at least one of the first cantilevered portion (43a) or the second cantilevered portion (43b) are configured to cooperate with the housing (20) for inhibiting the rotation of the ferrule (30) with respect to the housing (20) when the ferrule subassembly (60) is fully-seated in the housing (20), and allow rotation of the ferrule (30) for tuning when the ferrule subassembly (60) is not seating in the housing (20).

16. The fiber optic connector of claim 14, wherein ferrule carrier front end (43) is sized to cooperate with the housing (20) for inhibiting the rotation of the ferrule (30) with respect to the ferrule carrier (40) when the ferrule carrier front end (43) is fully-seated in the housing (20).

17. The fiber optic connector of any one of claims 14-16, one of the first cantilevered portion (43a) or the second cantilevered portion (43b) comprising a ferrule retention structure (43c).

18. The fiber optic connector of any one of claims 1-5, the ferrule (30) being a portion of a ferrule subassembly (60) that further comprises a ferrule carrier (40), the ferrule carrier (40) comprising a ferrule carrier rear end (41), a ferrule carrier front end (43) and a ferrule carrier passageway (42) extending from the ferrule carrier rear end (41) to the ferrule carrier front end (43), wherein the ferrule carrier passageway (42) comprises a fiber buckling zone (47).

19. The fiber optic connector of any one of claims 1-5, the ferrule (30) being a portion of a ferrule subassembly (60), wherein the ferrule subassembly (60) further comprises a ferrule carrier (40) comprising a ferrule carrier front end (43), the ferrule carrier front end (43) comprising at least a first cantilevered portion (43a).

20. The fiber optic connector of any one of claims 1-5, the ferrule (30) being a portion of a ferrule subassembly (60), wherein the ferrule subassembly (60) further comprises a ferrule carrier (40) comprising a ferrule carrier front end (43), the ferrule carrier front end (43) comprising a first cantilevered portion (43a) and a second cantilevered portion (43b).

21. The fiber optic connector of claim 6, wherein the ferrule subassembly (60) comprises a ferrule carrier (40) comprising a ferrule carrier front end (43), the ferrule carrier front end (43) comprising a first cantilevered portion (43a), a second cantilevered portion (43b) and a resilient member pocket (46).

22. The fiber optic connector of claims 20 or 21, at least one of the first cantilevered portion (43a) or the second cantilevered portion (43b) comprising a ferrule retention structure (43c).

23. The fiber optic connector of any one of claims 1-22, wherein the ferrule (30) is tunable relative to the housing (20).

24. The fiber optic connector of any one of claims 6-22, wherein the ferrule (30) is tunable within the ferrule subassembly (60).

25. The fiber optic connector of claims 23 or 24, wherein the ferrule is tunable through an angle (θ) of ±180 degrees.

26. The fiber optic connector of any one of claims 8-22, wherein the ferrule carrier (40) is tunable relative to the housing (20).

27. The fiber optic connector of claim 26, wherein the ferrule carrier (40) is tunable through an angle (ϕ) of ±180 degrees.

28. A fiber optic connector (10), comprising:

a housing (20) comprising a rear end (21) and a front end (23) with a longitudinal passageway (22) extending from the rear end (21) to the front end (23), and an

opening (21A) at the rear end of the housing, wherein the housing (20) provides a first connector footprint; and

a ferrule subassembly (60), wherein the opening (21A) at the rear end (21) of the housing (20) is sized for receiving a portion of the ferrule subassembly (60), the ferrule subassembly (60) comprising:

a ferrule carrier (40) comprising a ferrule carrier front end (43), the ferrule carrier front end (43) comprising at least a first cantilevered portion (43a);

a ferrule (30) comprising a fiber bore (32) extending from a rear end (31) to a front end (33); and

a conversion housing (80, 82), wherein the conversion housing (80, 82) cooperates with the housing (20) for changing the fiber optic connector (10') from the first connector footprint to a second connector footprint.

29. The fiber optic connector of claim 28, wherein the ferrule subassembly (60) is sized to cooperate with the housing (20) for inhibiting the rotation of the ferrule (30) with respect to the ferrule carrier (40) when the ferrule subassembly (60) is fully-seated into the housing (20).

30. The fiber optic connector of claims 28 or 29, wherein the at least one first cantilevered portion (43a) is configured to cooperate with the housing (20) for inhibiting the rotation of the ferrule (30) with respect to the housing (20) when the ferrule subassembly (60) is fully-seated in the housing (20), and allow rotation of the ferrule (30) for tuning when the ferrule subassembly (60) is not seating in the housing (20).

31. The fiber optic connector of claims 28-30, wherein the ferrule carrier front end (43) further comprises a second cantilevered portion (43b)

32. The fiber optic connector of claims 28-31, further comprising a resilient member (50), and wherein the ferrule carrier (40) further comprises a resilient member pocket (46).

33. The fiber optic connector of claims 31 or 32, wherein the resilient member pocket (46) is disposed between the first cantilevered portion (43a) and the second cantilevered portion (43b).

34. The fiber optic connector of claims 32 or 33, wherein the resilient member pocket (46) is configured for receiving the resilient member (50) in a direction transverse to a longitudinal direction of the ferrule carrier (40).

35. The fiber optic connector of any one of claims 28-34, wherein the ferrule carrier (40) comprises a ferrule carrier rear end (41) and a ferrule carrier passageway (42) extending from the ferrule carrier rear end (41) to the ferrule carrier front end (43), wherein the ferrule carrier passageway (42) comprises a fiber buckling zone (47).

36. The fiber optic connector of any one of claims 28-35, wherein ferrule carrier front end (43) is sized to cooperate with the housing (20) for inhibiting the rotation of the ferrule (30) with respect to the ferrule carrier (40) when the ferrule carrier front end (43) is fully-seated into the housing (20).

37. The fiber optic connector of any one of claims 28-36, at least one of the first cantilevered portion (43a) or the second cantilevered portion (43b) comprising a ferrule retention structure (43c).

38. The fiber optic connector of any one of claims 28-37, wherein the ferrule (30) is tunable relative to the housing (20).

39. The fiber optic connector of any one of claims 28-37, wherein the ferrule (30) is tunable within the ferrule subassembly (60).

40. The fiber optic connector of claims 38 or 39, wherein the ferrule (30) is tunable through an angle (θ) of ±180 degrees.

41. The fiber optic connector of any one of claims 28-37, wherein the ferrule carrier (40) is tunable relative to the housing (20).

42. The fiber optic connector of claim 41, wherein the ferrule carrier (40) is tunable through an angle (ϕ) of ±180 degrees.

43. The fiber optic connector of any one of claims 28-42, the housing (20) further comprising a part of the rear portion (RP) of the housing (20) that comprises a round cross-section (RCS) and a part of the front portion (FP) of the housing (20) comprises a non-round cross-section (NRCS) with a transition region (TR) disposed between the rear portion (RP) and the front portion (FP), wherein the transition region (TR) comprises a threaded portion (TP).

44. The fiber optic connector of claim 43, wherein the threaded portion (TP) is adjacent to a keying feature.

45. The fiber optic connector of claims 43 or 44, wherein the non-round cross-section (NCRS) comprises a rectangular cross-section comprising rounded corners (RC).

46. The fiber optic connector of any one of claims 43-45, wherein the front portion (FP) of housing (20) comprises another cross-section portion (ACSP).

47. The fiber optic connector of claim 46, wherein the another cross-section portion (ACSP) comprises a SC footprint.

48. A fiber optic connector (10), comprising:

a housing (20) comprising a rear end (21) and a front end (23) with a longitudinal passageway (22) extending from the rear end (21) to the front end (23), and an opening (21a) at the rear end of the housing, wherein the housing (20) provides a first connector footprint; and

a ferrule subassembly (60), wherein the opening (21a) at the rear end (21) of the housing (20) is sized for receiving a portion of the ferrule subassembly (60), the ferrule subassembly (60) comprising:

a ferrule carrier (40) comprising a ferrule carrier front end (43), the ferrule carrier front end (43) comprising a first cantilevered portion (43a), a second cantilevered portion (43b), and a resilient member pocket (46) disposed between the first cantilevered portion (43a) and the second cantilevered portion (43b);

a resilient member (50);

a ferrule (30) comprising a fiber bore (32) extending from a rear end (31) to a front end (33); and

a conversion housing (80, 82), wherein the conversion housing (80, 82) cooperates with the housing (20) for changing the fiber optic connector (10') from the first connector footprint to a second connector footprint.

49. The fiber optic connector of claim 48, wherein the ferrule carrier front end (43) is sized to cooperate with the housing (20) for inhibiting the rotation of the ferrule (30) with respect to the ferrule carrier (40) when the ferrule carrier front end (43) is fully-seated into the housing (20).

50. The fiber optic connector of claims 48 or 49, wherein one of the first cantilevered portion (43a) and the second cantilevered portion (43b) are configured to cooperate with the housing (20) for inhibiting the rotation of the ferrule (30) with respect to the housing (20) when the ferrule subassembly (60) is fully-seated into the housing (20), and allowing rotation of the ferrule (30) for tuning when the ferrule subassembly (60) is not seated into the housing (20).

51. The fiber optic connector of any one of claims 48-50, wherein the resilient member pocket (46) is configured for receiving the resilient member (50) in a direction transverse to a longitudinal direction of the ferrule carrier (40).

52. The fiber optic connector of any one of claims 48-51, wherein the ferrule carrier (40) comprises a ferrule carrier rear end (41), and a ferrule carrier passageway (42) extending from the ferrule carrier rear end (41) to the ferrule carrier front end (43), wherein the ferrule carrier passageway (42) comprises a fiber buckling zone (47).

53. The fiber optic connector of any one of claims 48-52, at least one of the first cantilevered portion (43a) or the second cantilevered portion (43b) comprising a ferrule retention structure (43c).

54. The fiber optic connector of any one of claims 48-53, wherein the ferrule (30) is tunable relative to the housing (20).

55. The fiber optic connector of any one of claims 48-53, wherein the ferrule (30) is tunable within the ferrule subassembly (60).

56. The fiber optic connector of claims 54 or 55, wherein the ferrule (30) is tunable through an angle (θ) of ±180 degrees.

57. The fiber optic connector of any one of claims 48-53, wherein the ferrule carrier (40) is tunable relative to the housing.

58. The fiber optic connector of claim 57, wherein the ferrule carrier is tunable through an angle (ϕ) of ±180 degrees.

59. The fiber optic connector of any one of claims 48-58, the housing (20) further comprising a part of the rear portion (RP) of the housing (20) that comprises a round cross-section (RCS) and a part of the front portion (FP) of the housing (20) comprises a non-round cross-section (NRCS) with a transition region (TR) disposed between the rear portion (RP) and the front portion (FP), wherein the transition region (TR) comprises a threaded portion (TP).

60. The fiber optic connector of claim 59, wherein the threaded portion (TP) is adjacent to keying feature.

61. The fiber optic connector of claims 59 or 60, wherein the non-round cross-section (NCRS) comprises a rectangular cross-section comprising rounded corners (RC).

62. The fiber optic connector of any one of claims 59-61, wherein the front portion (FP) of housing (20) comprises another cross-section portion (ACSP).

63. The fiber optic connector of claim 62, wherein the another cross-section portion (ACSP) comprises a SC footprint.

64. The fiber optic connector of any one of claims 1-63, the housing (20) further comprises a locking feature (20L).

65. The fiber optic connector of claim 64, wherein the locking feature (20L) is a groove. shoulder, a ramp with a ledge, or a scallop formed in the housing (20).

66. The fiber optic connector of any one of claims 1-65, wherein the housing (20) comprises at least one adhesive fill opening (29).

67. The fiber optic connector of any one of claims 1-66, the ferrule (30) comprising at least one selectively tunable surface (36), wherein the selectively tunable surface (36) allows the ferrule (30) to have a plurality of rotational positions relative to the housing (20).

68. The fiber optic connector of claim 67, wherein the selectively tunable surface (36) is formed by a plurality of planar surfaces (36S) on the ferrule (30).

69. The fiber optic connector of claims 67 or 68, the selectively tunable surface (36) formed by a plurality of planar surfaces (36S) that are recessed on the ferrule (30).

70. The fiber optic connector of any one of claims 67-69, wherein the selectively tunable surface (36) of the ferrule (30) is disposed adjacent to a free rotation portion of the ferrule (30), thereby allowing rotation of the ferrule (30) for tuning during assembly.

71. The fiber optic connector of any one of claims 1-70, wherein the housing (20) comprises less than three threads (28).

72. The fiber optic connector of claim 71, wherein the less than three threads (28) are continuous.

73. The fiber optic connector of any one of claims 1-72, further comprising an O-ring (65).

74. The fiber optic connector of any one of claims 1-73, further comprising a dust cap (70).

75. The fiber optic connector of any one of claims 5-74, the ferrule sub-assembly (60) further comprising a cable adapter (59).

76. The fiber optic connector of any one of claims 1-75, wherein the ferrule (30) cooperates directly with the ferrule carrier (40) without using a ferrule holder.

77. The fiber optic connector of any one of claims 1-76 being a portion of a cable assembly (100).

78. The fiber optic connector of any one of claims 1-77 being a portion of a distribution cable (100').

79. The fiber optic connector of any one of claims 1-78, wherein the second connector footprint is a SC connector footprint.

80. The fiber optic connector any one of claims 1-78, wherein the second footprint comprises a hardened connector footprint.

81. The fiber optic connector of any one of claims 1-78, wherein the changing from the first connector footprint to the second connector footprint comprises a single of component.

82. The fiber optic connector of any one of claims 1-78, wherein the changing from the first connector footprint to the second connector footprint comprises a plurality of components.

83. The fiber optic connector of any one of claims 1-78, wherein the changing from the first connector footprint to the second connector footprint comprises an inner boot, and outer boot, a shroud, a retaining member, and a coupling nut.

84. A method of making a fiber optic connector (10'), comprising:

placing an optical fiber (92) into a ferrule (30) wherein the ferrule (30) comprises a fiber bore (34) extending from a rear end (31) to a front end (33);

placing the ferrule (30) into a ferrule carrier (40), wherein the ferrule carrier (40) comprises a ferrule carrier front end (43) comprising at least a first cantilevered portion (43a);

inserting the ferrule carrier (40) into an opening (21a) at a rear end (21) of the housing (20), wherein the housing (20) cooperates with the front end (43) of the ferrule carrier (40) to inhibit rotation of the ferrule (30) when the ferrule carrier is fully seated in the housing (20), wherein the housing (20) provides a first connector footprint; and

attaching a conversion housing (80, 82), wherein the conversion housing (80, 82) cooperates with the housing (20) for changing the fiber optic connector (10') from the first connector footprint to a second connector footprint.

85. The method of claim 84, wherein the ferrule carrier front end (43) further comprises a second cantilevered portion (43b).

86. The method of claim 85, the step of placing the ferrule (30) into the ferrule carrier (40) causing at least one of the first cantilevered portion (43a) or the second cantilevered portion (43b) to deflect.

87. The method of any one of claims 84-86, wherein at least one of the first cantilevered portion (43a) comprises a ferrule retention structure (43c).

88. The method of any one of claims 84-87, further comprising placing a resilient member (50) into a resilient member pocket (46) of the ferrule carrier.

89. The method of any one of claims 84-88, further comprising a step of tuning the ferrule comprising rotating the ferrule (30) relative to the ferrule carrier (40).

90. The method of any one of claims 84-89, wherein the ferrule carrier (40) is a portion of a ferrule subassembly (60).

91. The method of claim 90, further comprising a step of tuning the ferrule comprising rotating the ferrule subassembly (60) relative to the housing (20).

92. The method of claim 90, wherein the ferrule subassembly (60) further comprises a cable adapter (59).

93. The method of claim 92, wherein the step of tuning the ferrule comprises rotating the ferrule carrier (40) relative to the cable adapter (59).

94. A method of making a fiber optic connector (10'), comprising:

placing an optical fiber (92) into a ferrule (30) wherein the ferrule (30) comprises a fiber bore (34) extending from a rear end (31) to a front end (33);

placing the ferrule (30) into a ferrule subassembly (60), the ferrule subassembly (60) comprising a ferrule carrier (40) having a ferrule carrier front end (43), wherein the ferrule carrier front end (43) comprises at least a first cantilevered portion (43a);

tuning the ferrule (30);

inserting the ferrule subassembly (60) into an opening (21a) at a rear end (21) of the housing (20), wherein the housing (20) cooperates with the front end (43) of the ferrule carrier (40) to inhibit rotation of the ferrule (30) when the ferrule subassembly is fully seated in the housing (20), wherein the housing (20) provides a first connector footprint; and

attaching a conversion housing (80, 82), wherein the conversion housing (80, 82) cooperates with the housing (20) for changing the fiber optic connector (10') from the first connector footprint to a second connector footprint.

95. The method of claim 94, wherein the ferrule carrier front end (43) further comprises a second cantilevered portion (43b).

96. The method of claim 95, the step of placing the ferrule (30) into the ferrule carrier (40) causing at least one of the first cantilevered portion (43a) or the second cantilevered portion (43b) to deflect.

97. The method of any one of claims 94-96, wherein the at least one of the first cantilevered portion (43a) comprises a ferrule retention structure (43c).

98. The method of any one of claims 94-97, further comprising placing a resilient member (50) into a resilient member pocket (46) of the ferrule carrier.

99. The method of any one of claims 94-98, the step of tuning the ferrule comprising rotating the ferrule (30) relative to the ferrule carrier (40).

100. The method of any one of claims 94-99, the step of tuning the ferrule comprising rotating the ferrule subassembly (60) relative to the housing (20).

101. The method of any one of claims 94-100, wherein the ferrule subassembly (60) further comprises a cable adapter (59).

102. The method of claim 101, wherein the step of tuning the ferrule comprises rotating the ferrule carrier (40) relative to the cable adapter (59).

103. A method of making a fiber optic connector (10'), comprising:

placing an optical fiber (92) into a ferrule (30) wherein the ferrule (30) comprises a fiber bore (34) extending from a rear end (31) to a front end (33);

placing the ferrule (30) into a ferrule subassembly (60), the ferrule subassembly (60) comprising a ferrule carrier (40) having a ferrule carrier front end (43), a resilient member (50) and a cable adapter (59), wherein the ferrule carrier front end (43) comprises a first cantilevered portion (43a) and a second cantilevered portion (43b);

tuning the ferrule (30);

inserting the ferrule subassembly (60) into an opening (21a) at a rear end (21) of the housing (20), wherein the housing (20) cooperates with the front end (43) of the ferrule carrier (40) to inhibit rotation of the ferrule (30) when the ferrule subassembly is fully seated in the housing (20), wherein the housing (20) provides a first connector footprint; and

attaching a conversion housing (80, 82), wherein the conversion housing (80, 82) cooperates with the housing (20) for changing the fiber optic connector (10') from the first connector footprint to a second connector footprint.

104. The method of claim 103, the step of placing the ferrule (30) into the ferrule carrier (40) causing at least one of the first cantilevered portion (43a) or the second cantilevered portion (43b) to deflect.

105. The method of claims 103 or 104, wherein at least one of the first cantilevered portion (43a) or the second cantilevered portion (43b) comprises a ferrule retention structure (43c).

106. The method of any one of claims 103-105, further comprising placing the resilient member (50) into a resilient member pocket (46) of the ferrule carrier (40) in a direction that is transverse to a longitudinal direction of the ferrule carrier (40).

107. The method of any one of claims 103-106, the step of tuning the ferrule comprising rotating the ferrule (30) relative to the ferrule carrier (40).

108. The method of any one of claims 103-107, the step of tuning the ferrule comprising rotating the ferrule subassembly (60) relative to the housing (20).

109. The method of any one of claims 103-108, wherein the step of tuning the ferrule comprises rotating the ferrule carrier (40) relative to the cable adapter (59).

110. The method of any one of claims 84-109, wherein the housing comprises at least one adhesive fill opening, and an adhesive is placed into the housing through the at least one adhesive fill opening.

111. The method of any one of claims 84-110, further comprising placing at least one O-ring (65) on the housing (20).

112. The method of any one of claims 84-111, wherein the fiber optic connector is a portion of a distribution cable.

113. The method of any one of claims 84-112, wherein the ferrule (30) cooperates directly with the ferrule carrier (40) without using a ferrule holder.

114. The method of any one of claims 84-113, wherein the second connector footprint is a SC connector footprint.

115. The method of any one of claims 84-113, wherein the second footprint comprises a hardened connector footprint.

116. The method of any one of claims 84-113, wherein the changing from the first connector footprint to the second connector footprint comprises a single component.

117. The method of any one of claims 84-113, wherein the changing from the first connector footprint to the second connector footprint comprises a plurality of components.

118. The method any one of claims 84-113, wherein the changing from the first connector footprint to the second connector footprint comprises an inner boot, and outer boot, a shroud, a retaining member, and a coupling nut.

.

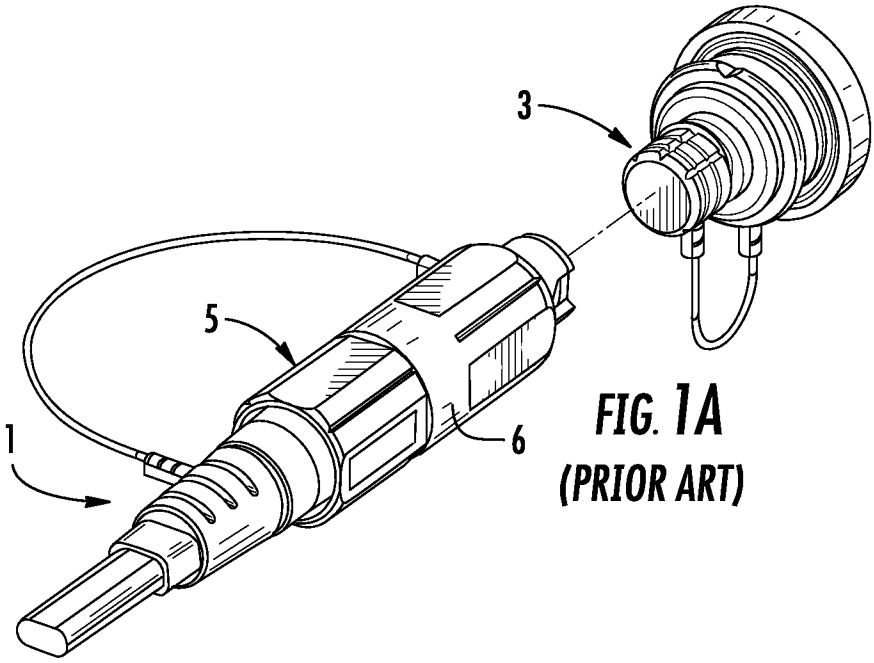

FIG. 1A
(PRIOR ART)

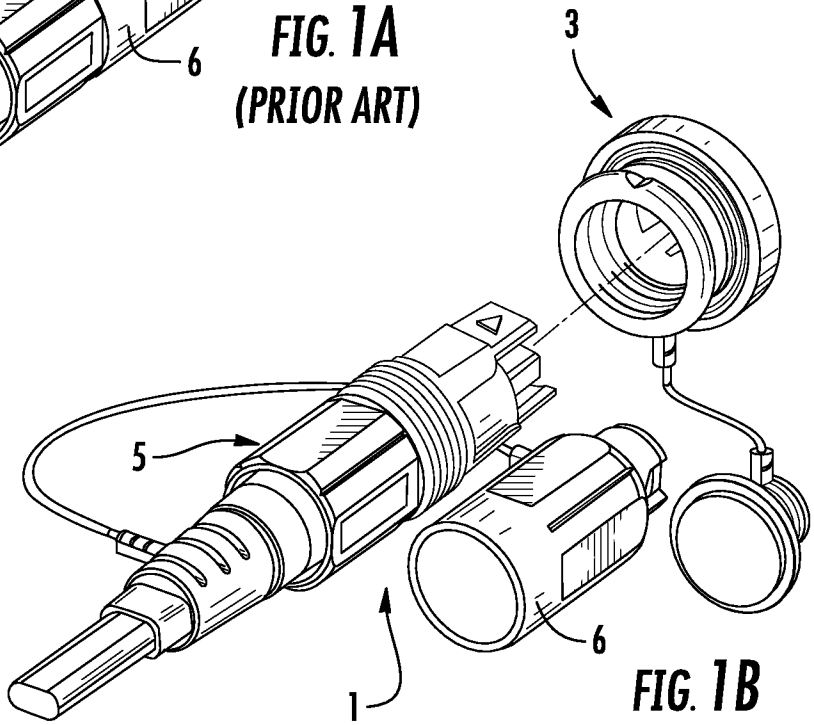

FIG. 1B
(PRIOR ART)

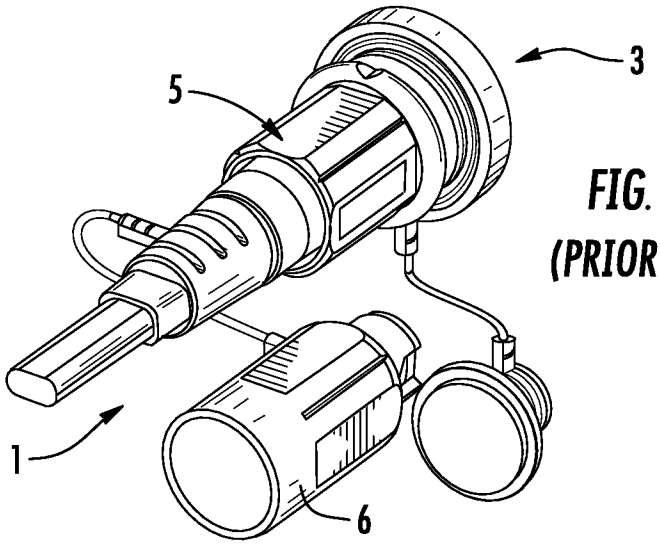

FIG. 1C
(PRIOR ART)

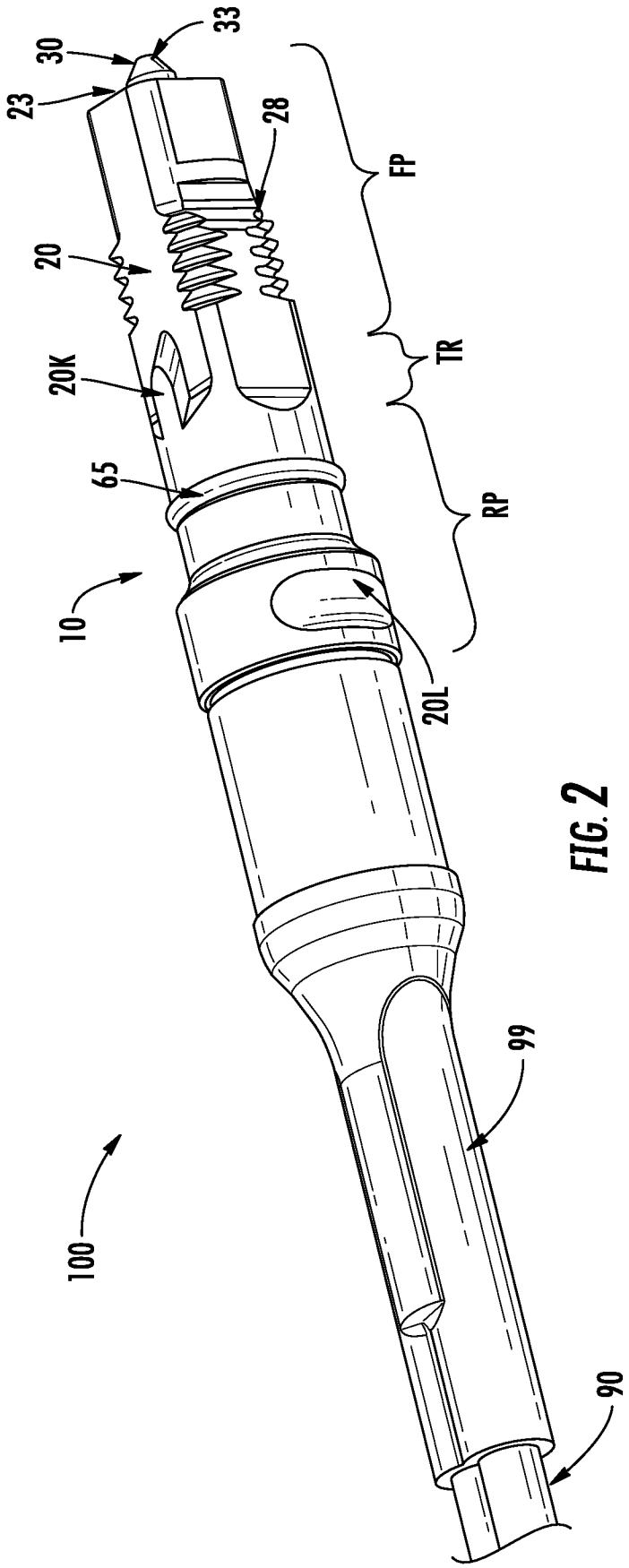

FIG. 2

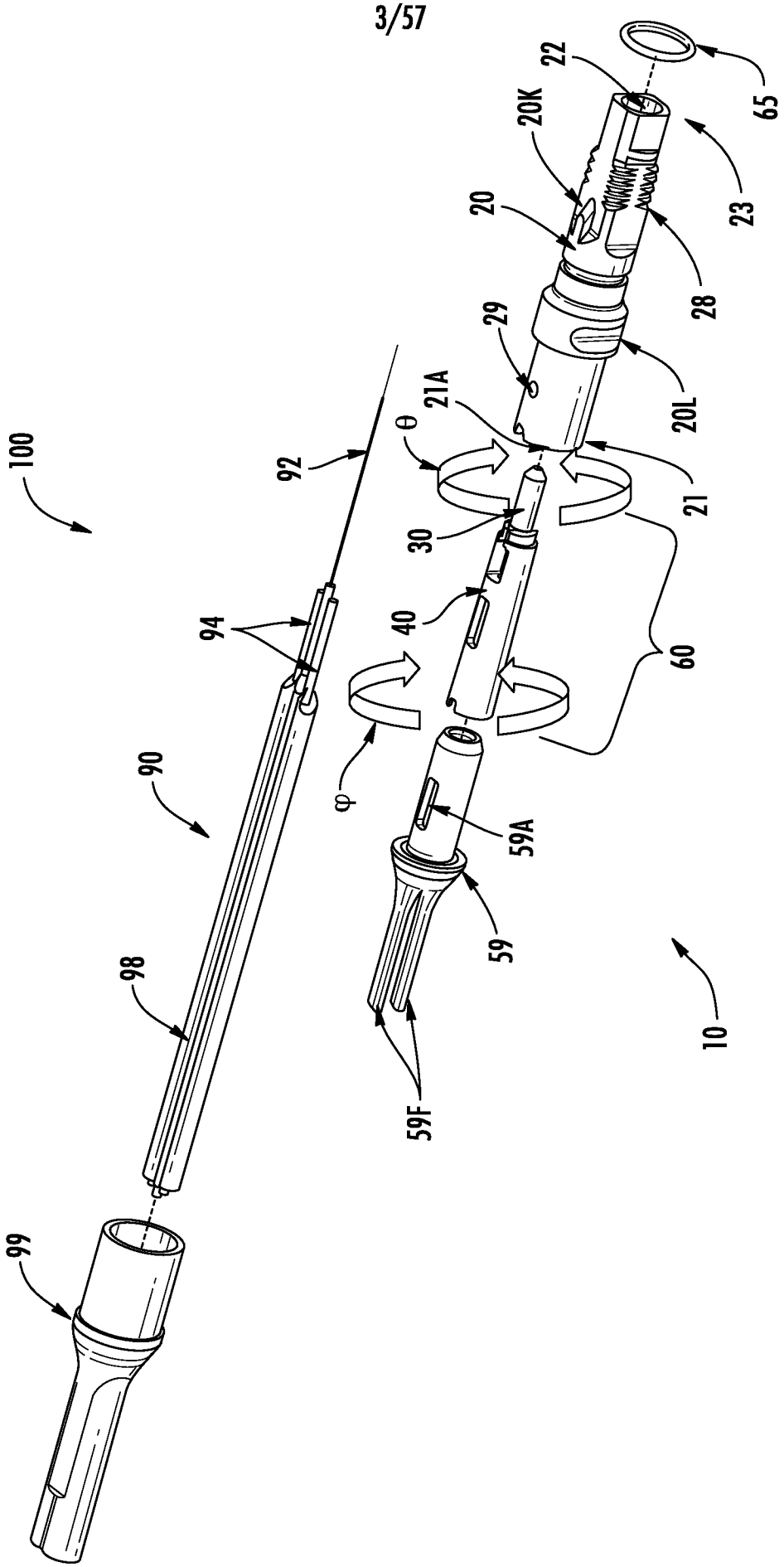
100
92
94
90
98
99
θ
21A
29
20
20K
22
65
23
28
20L
21
30
40
60
φ
59A
59
59F
10

FIG. 3

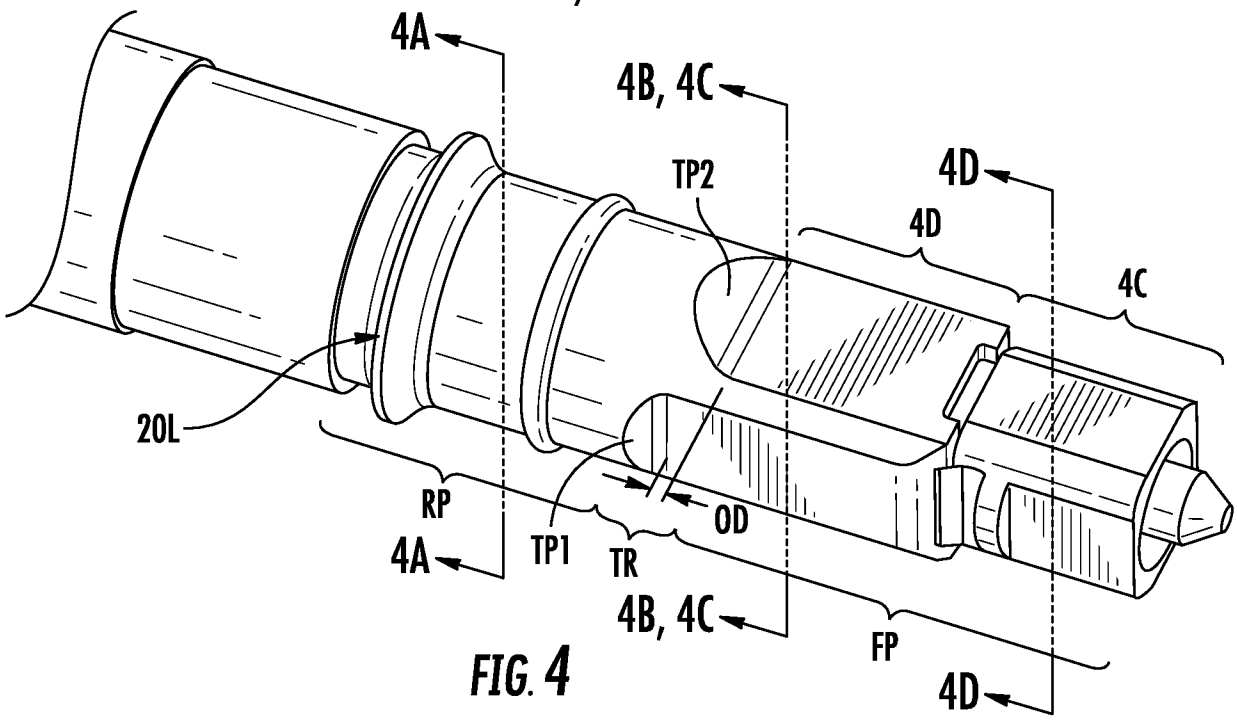

FIG. 4

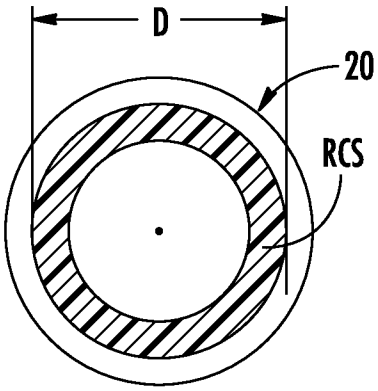

FIG. 4A

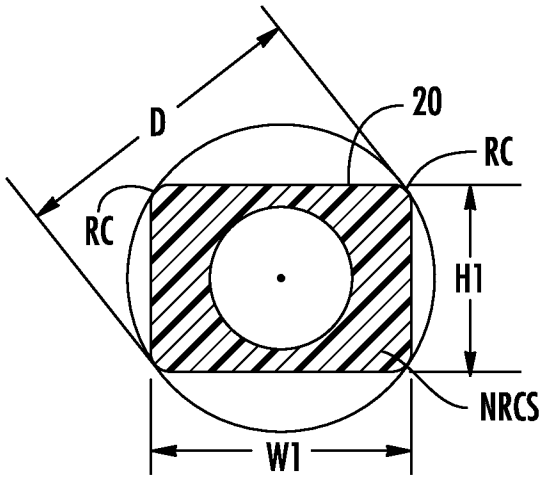

FIG. 4B

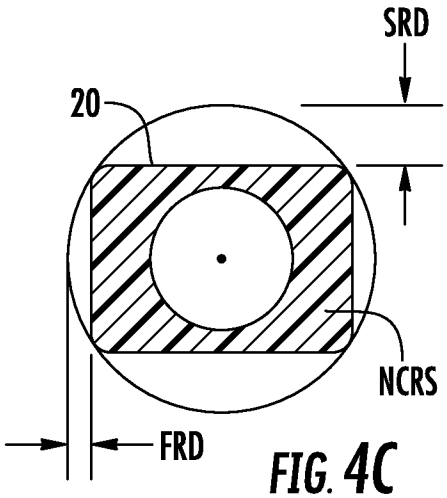

FIG. 4C

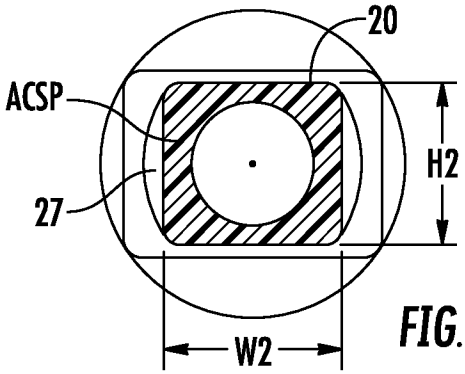

FIG. 4D

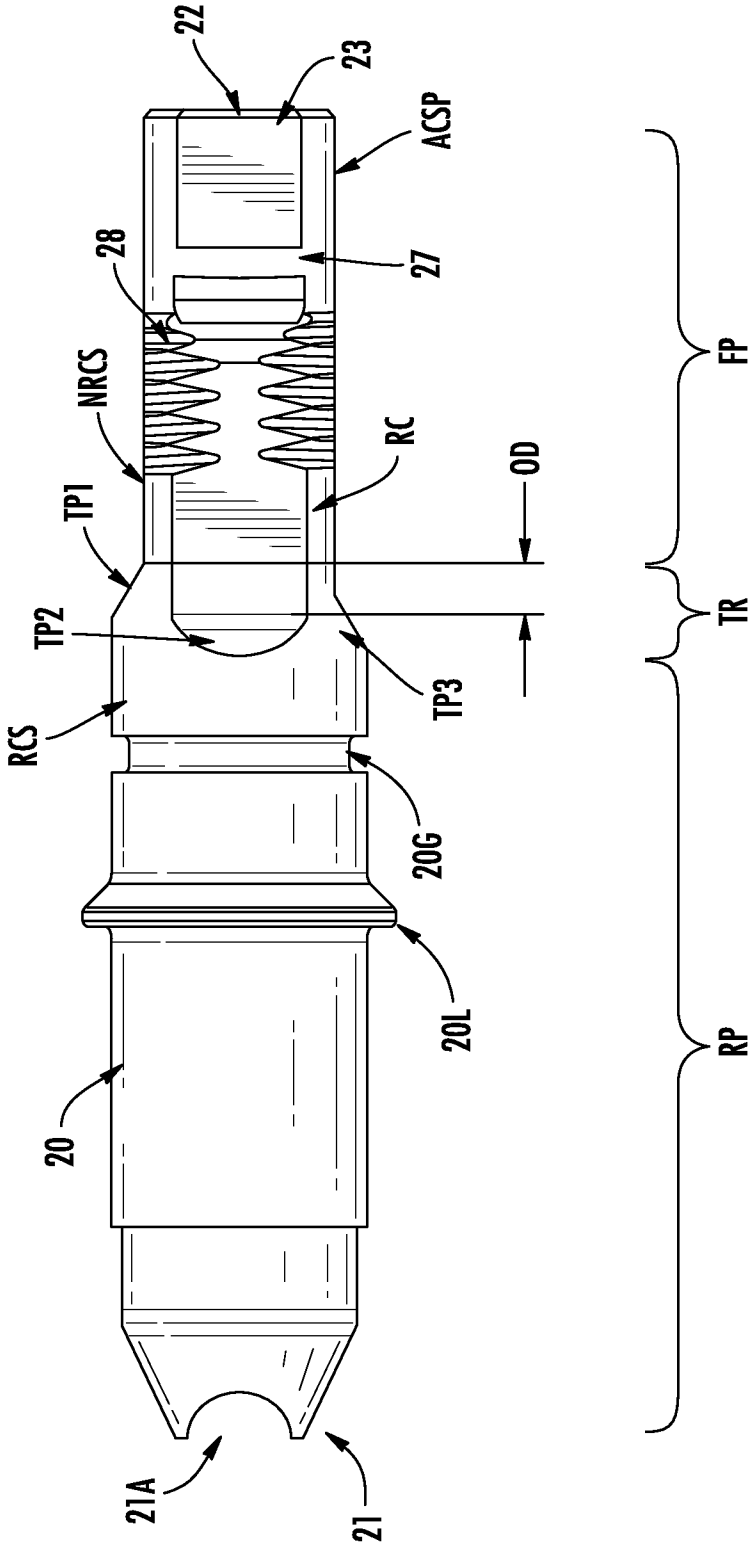
22
23
ACSP
28
27
NRCS
RC
OD
TP1
TP2
TP3
RCS
20G
20L
20
21A
21
FP
TR
RP

FIG. 4E

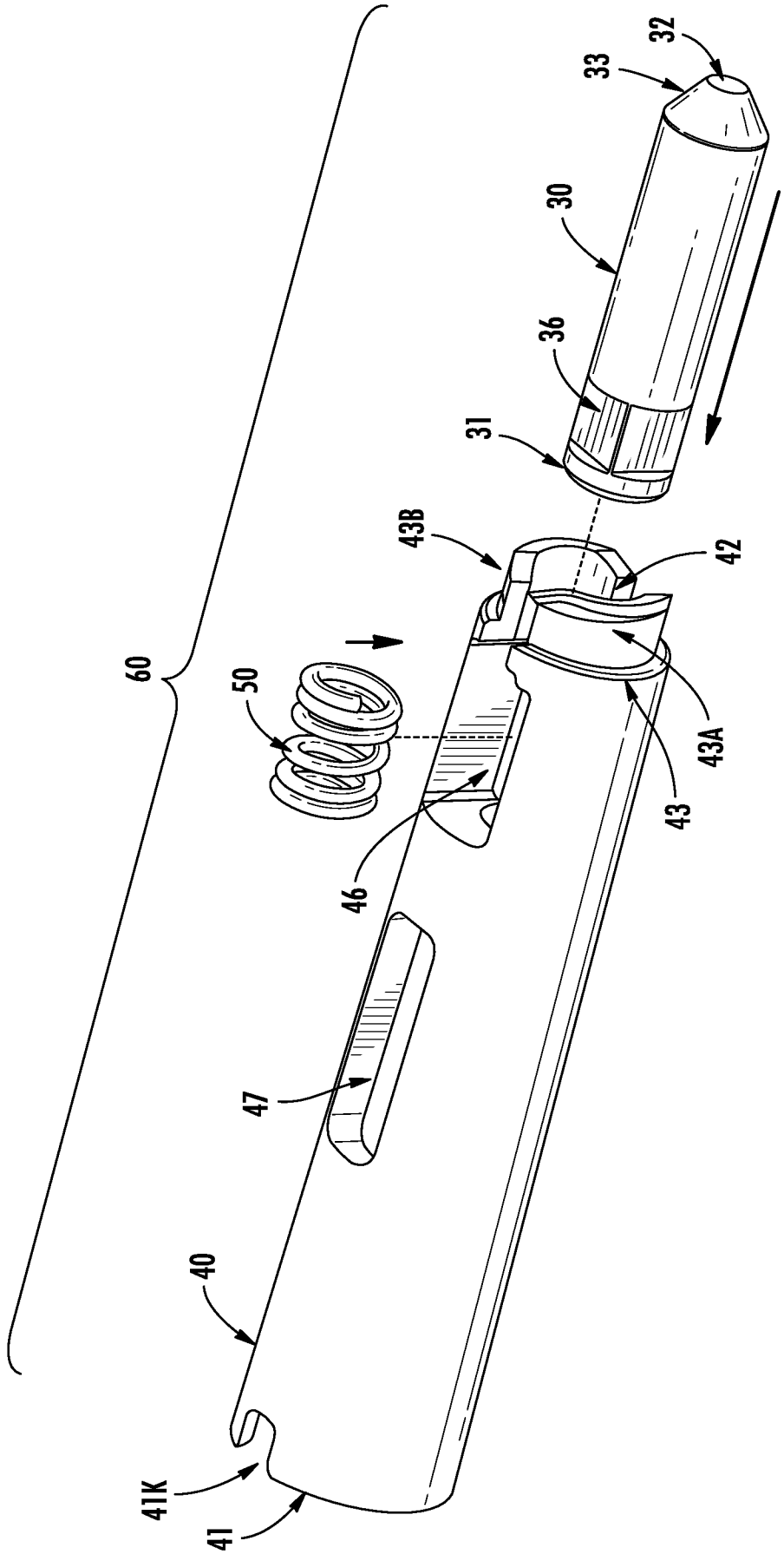

FIG. 5

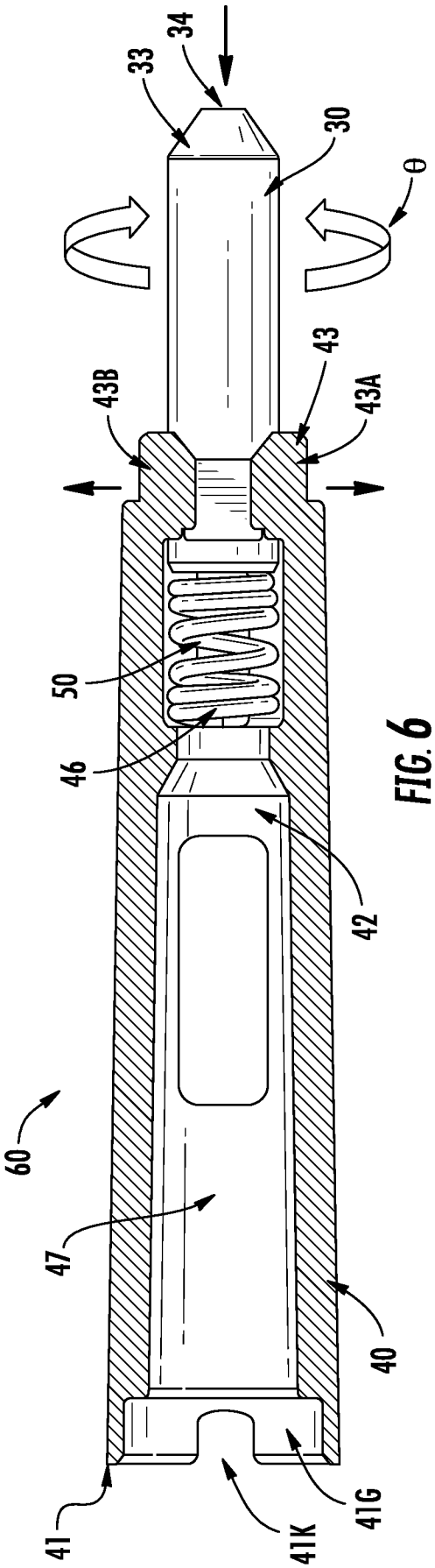
33
34
30
θ
43B
43
43A
50
46
42
60
47
40
41
41K
41G

FIG. 6

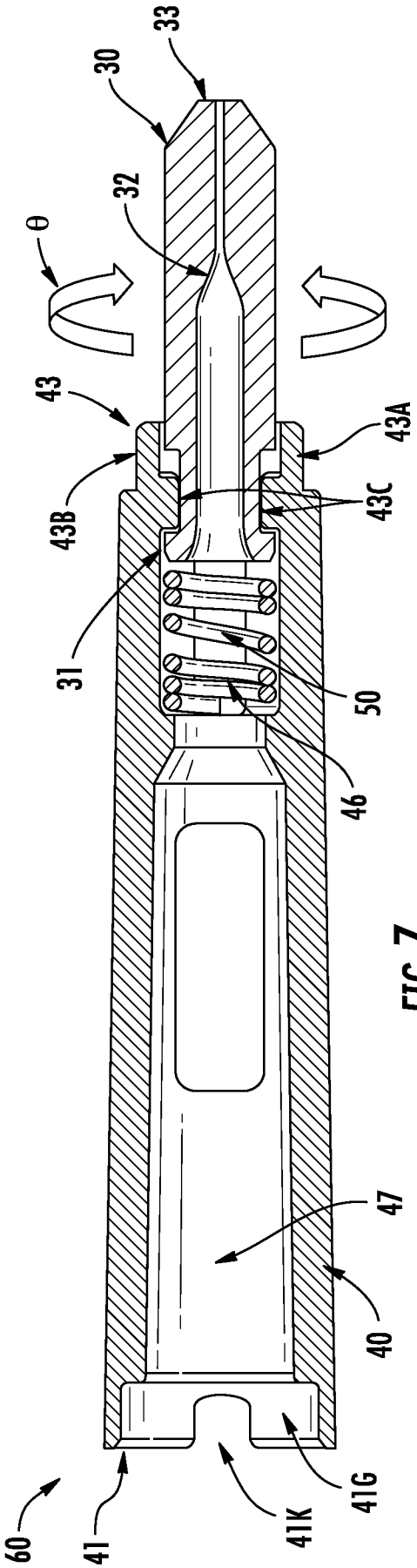
33
30
32
θ
43
43A
43B
43C
31
50
46
47
40
60
41
41K
41G

FIG. 7

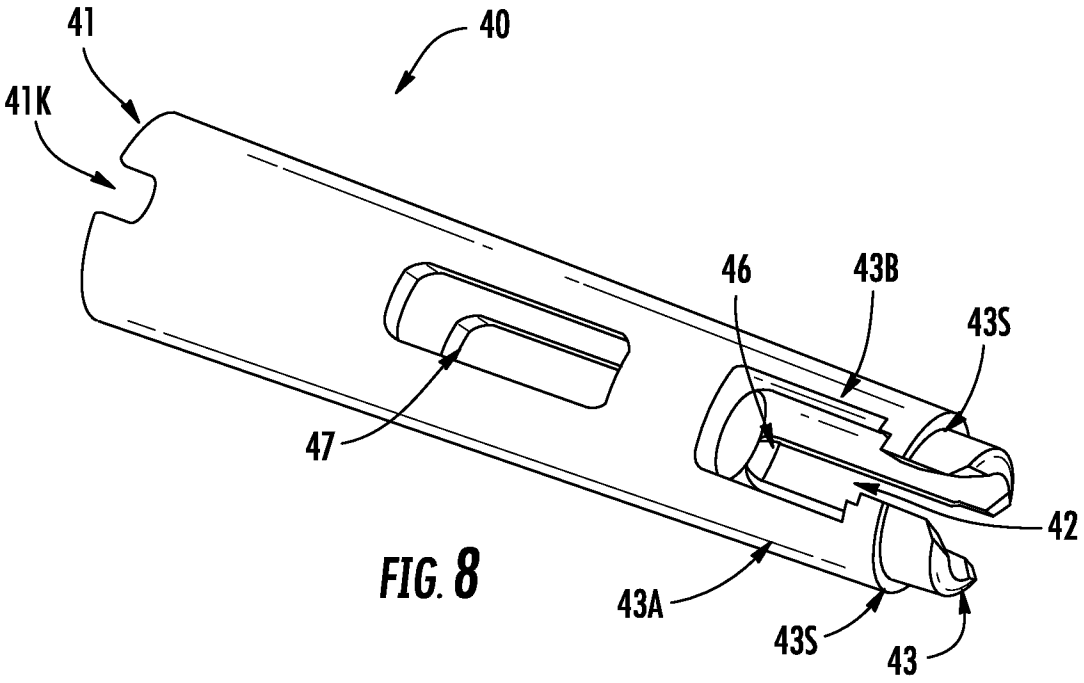
41
40
41K
46
43B
43S
47
42
43A
43S
43

FIG. 8

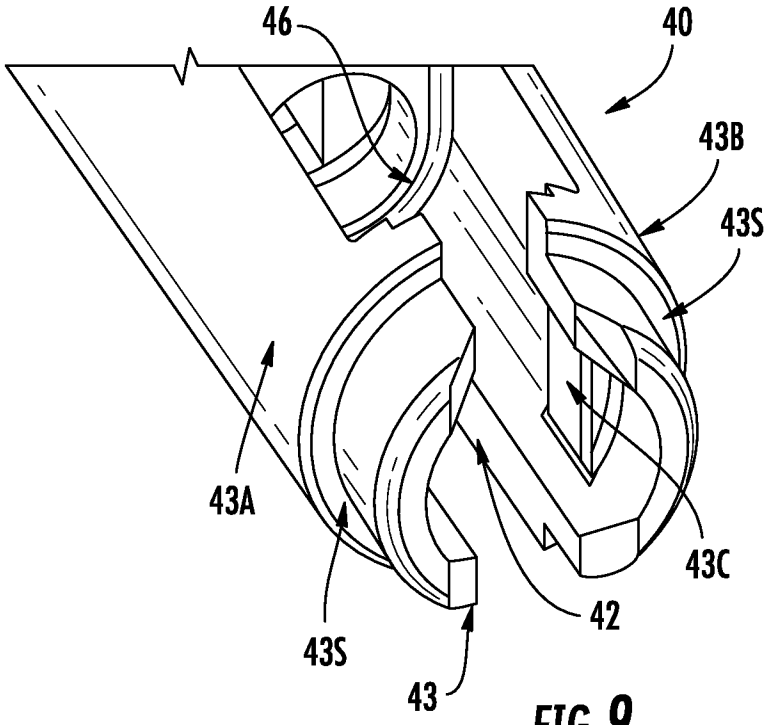
46
40
43B
43S
43A
43C
42
43S
43

FIG. 9

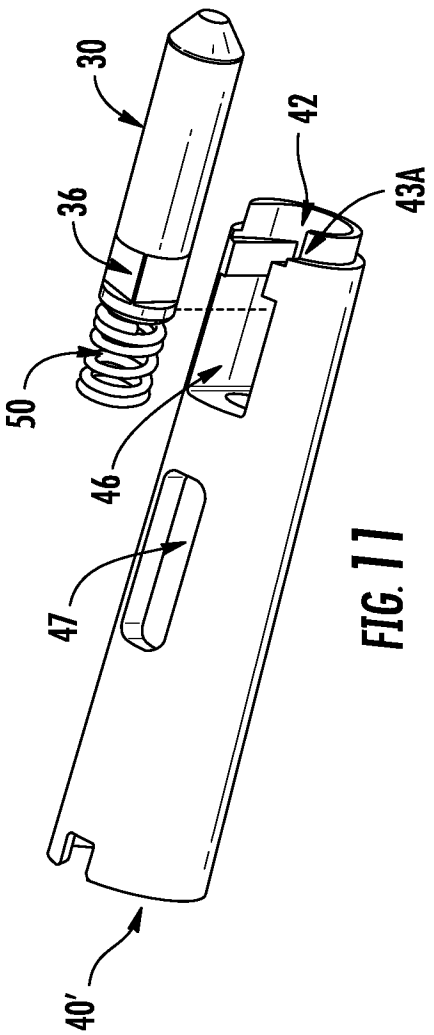

FIG. 11

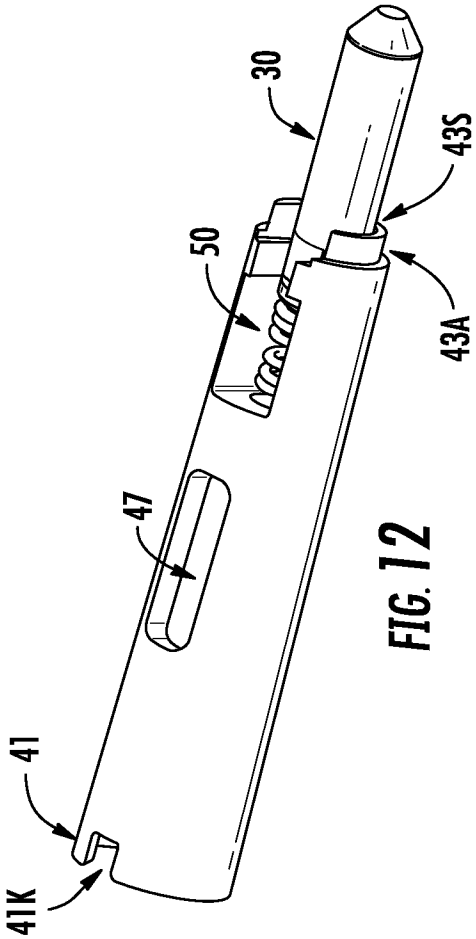

FIG. 12

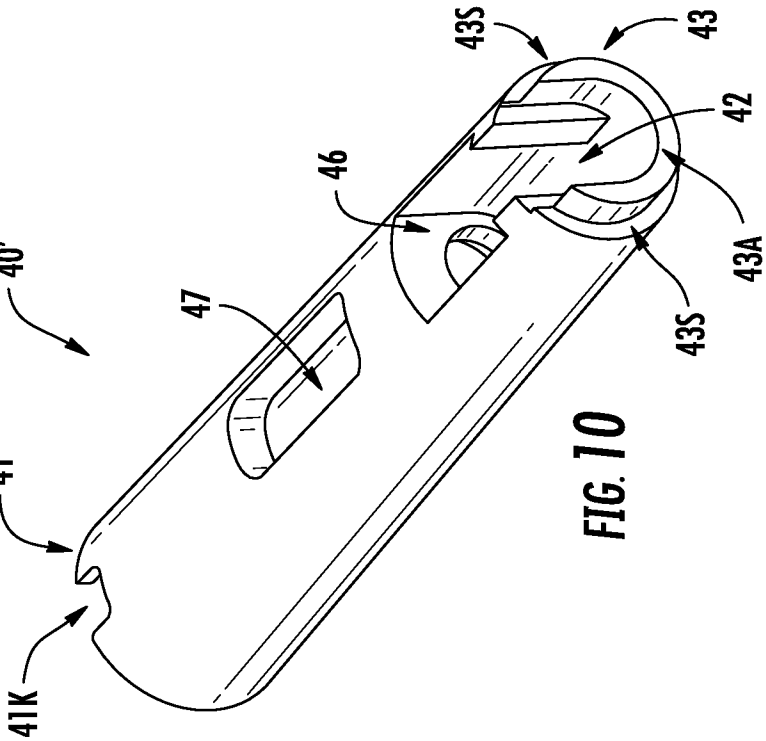

FIG. 10

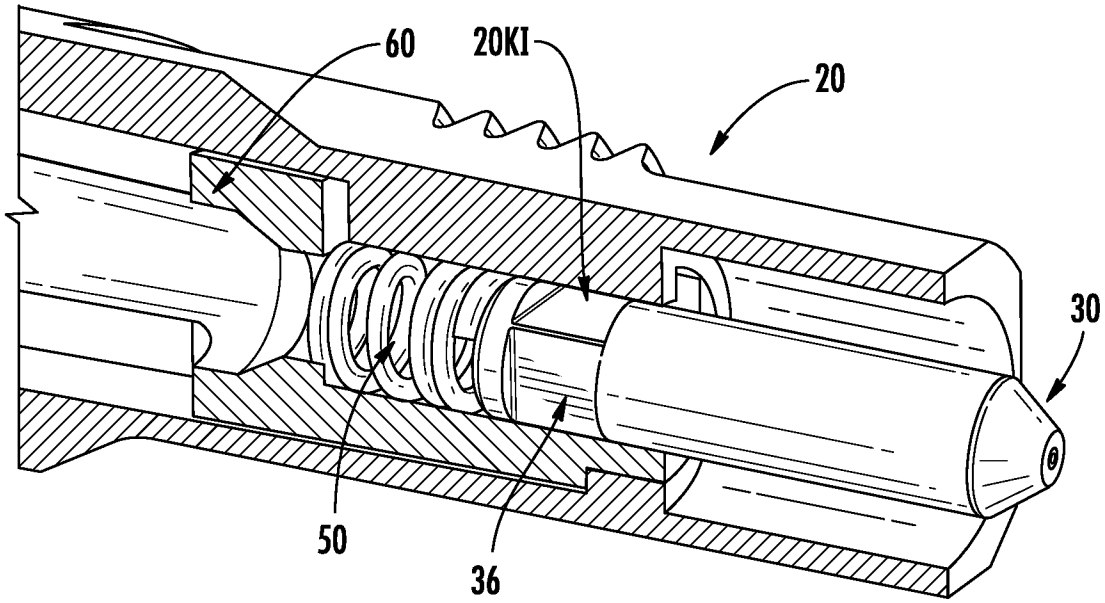

FIG. 13

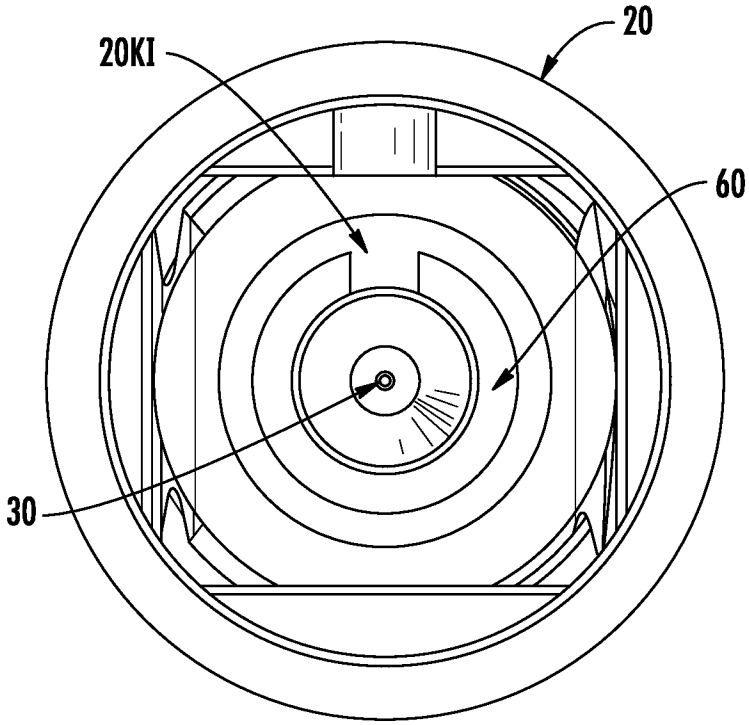

FIG. 14

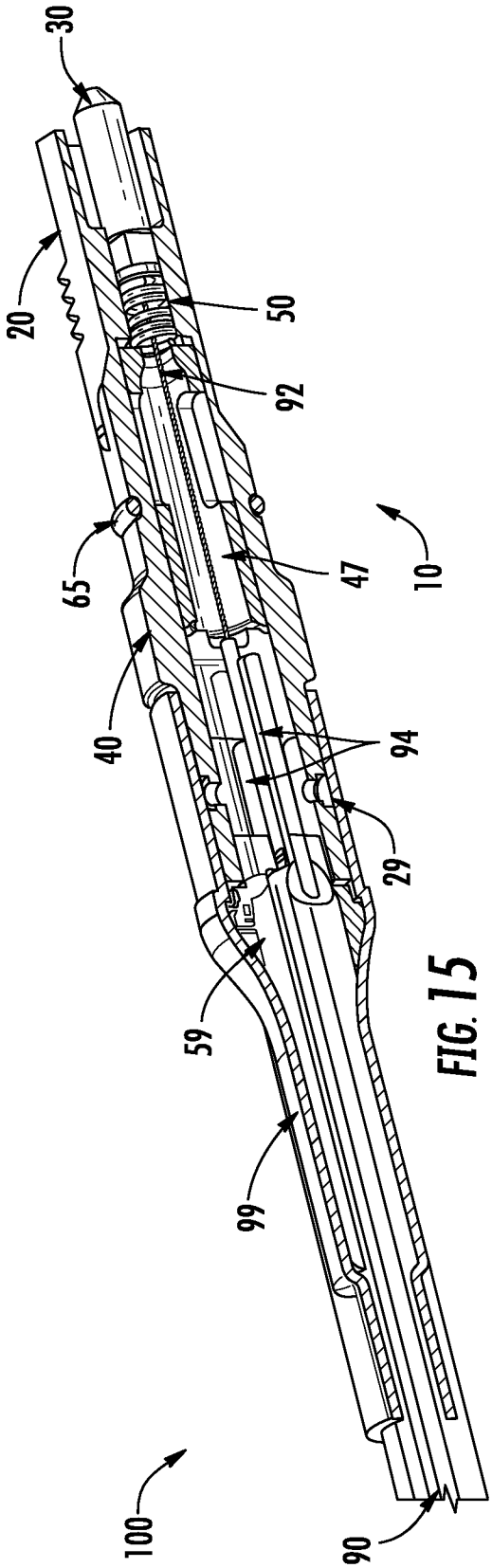
30
20
50
92
65
47
10
40
94
29
59
99
100
90

FIG. 15

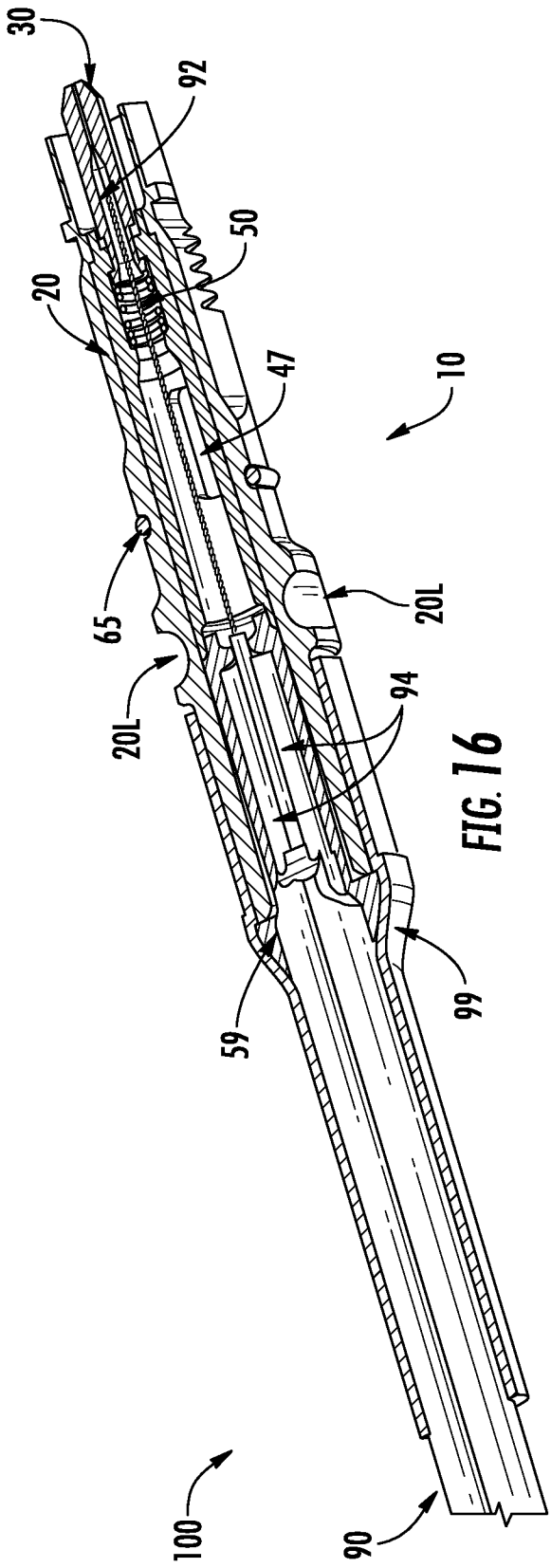
30
92
50
20
47
10
65
20L
20L
94
59
99
100
90

FIG. 16

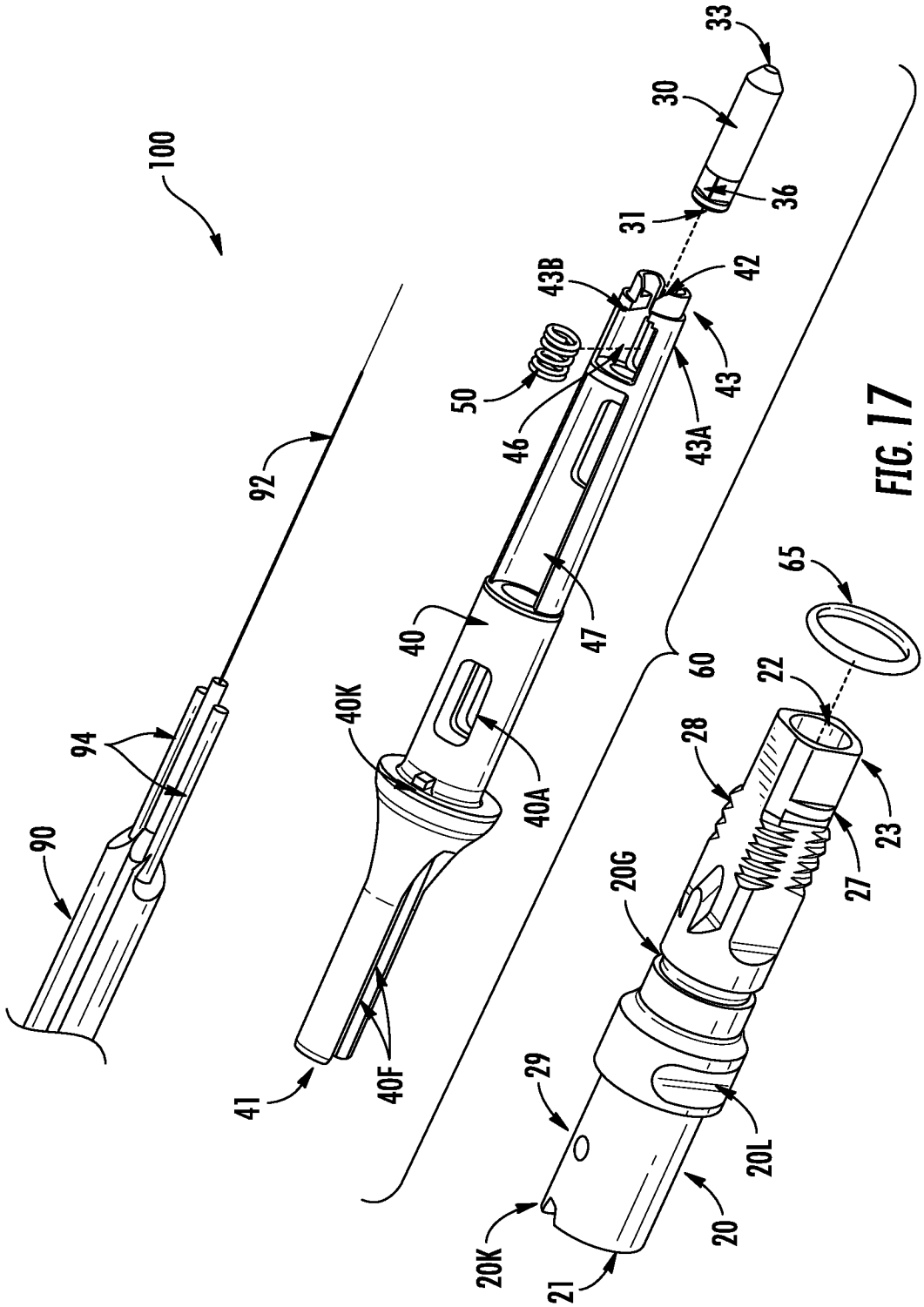
100
90
94
92
41
40F
40K
40A
40
47
46
50
43B
42
43
43A
31
36
30
33
60
65
22
28
23
27
20G
29
20L
20
20K
21

FIG. 17

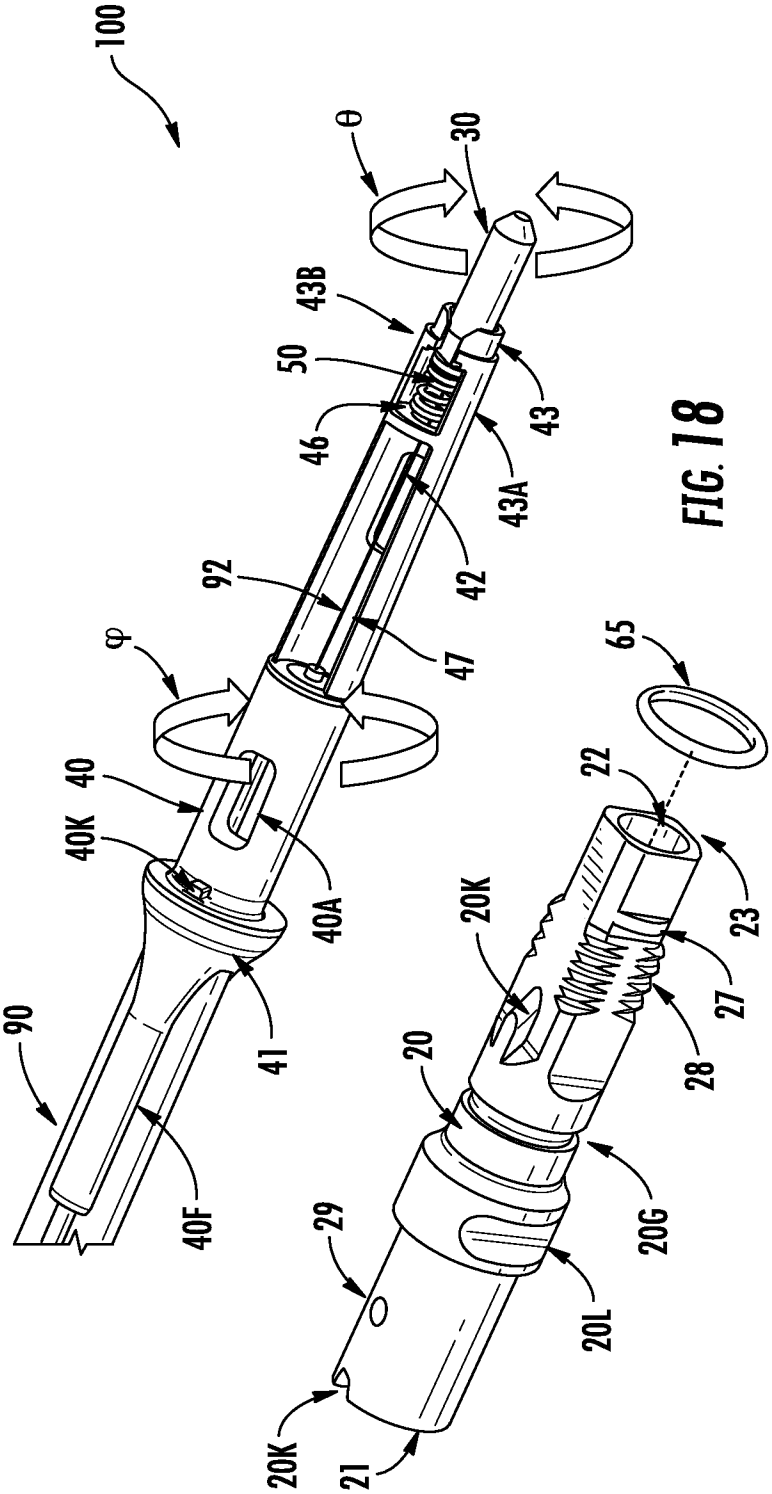
100
θ
30
43B
50
46
43
43A
42
92
47
φ
40
40K
40A
41
90
40F
65
22
23
20K
27
28
20
20G
29
20L
20K
21

FIG. 18

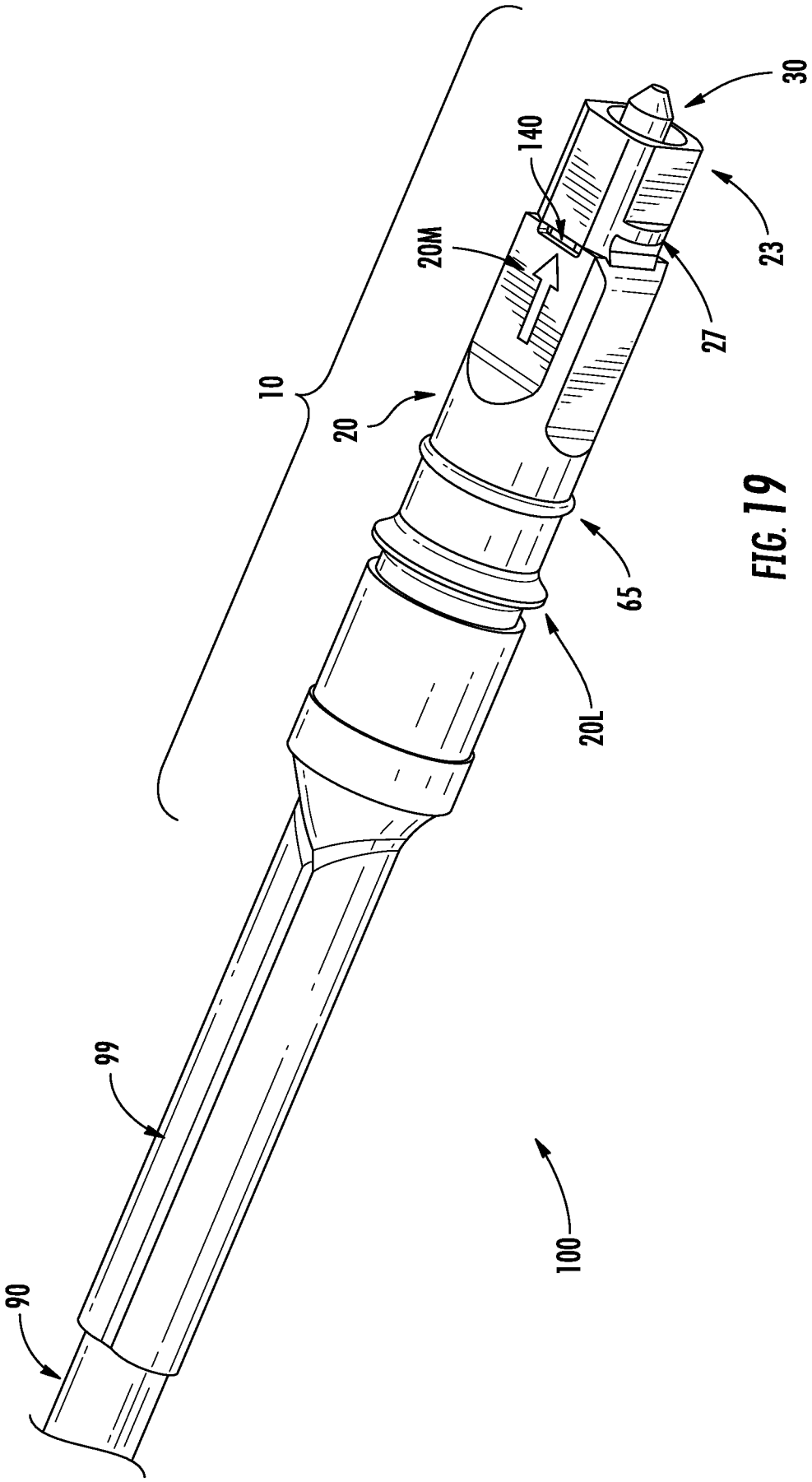

FIG. 19

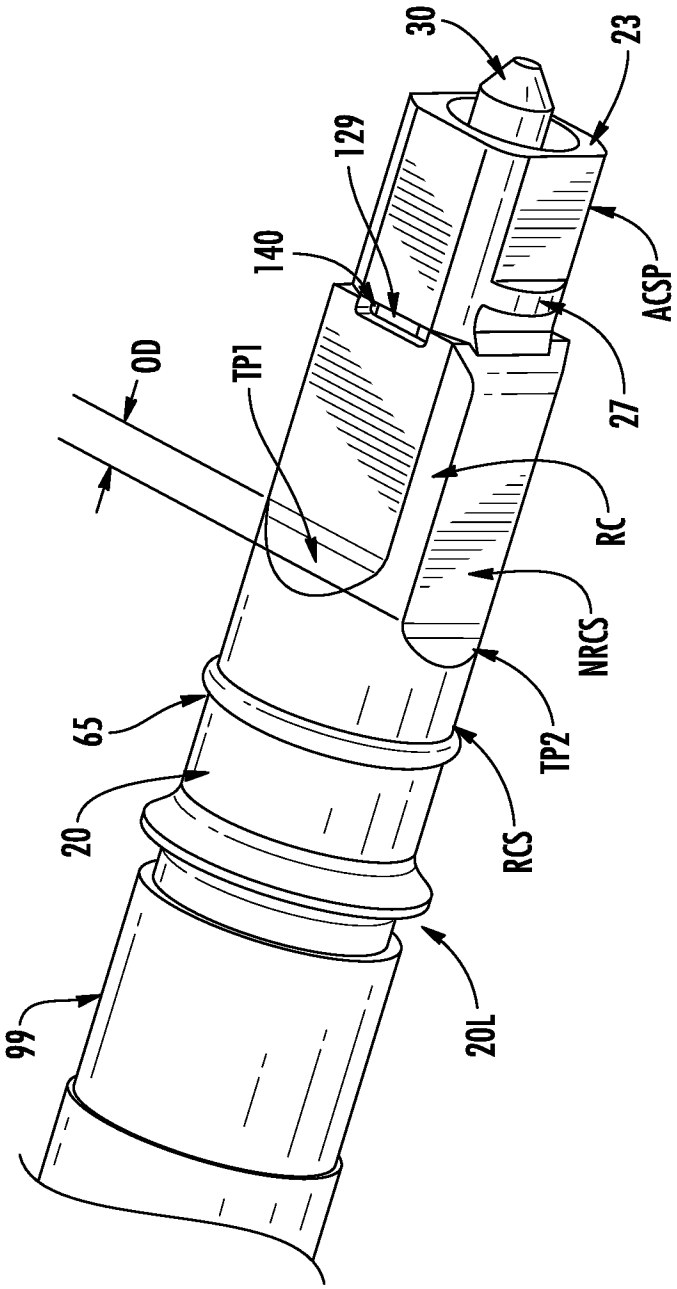

FIG. 20

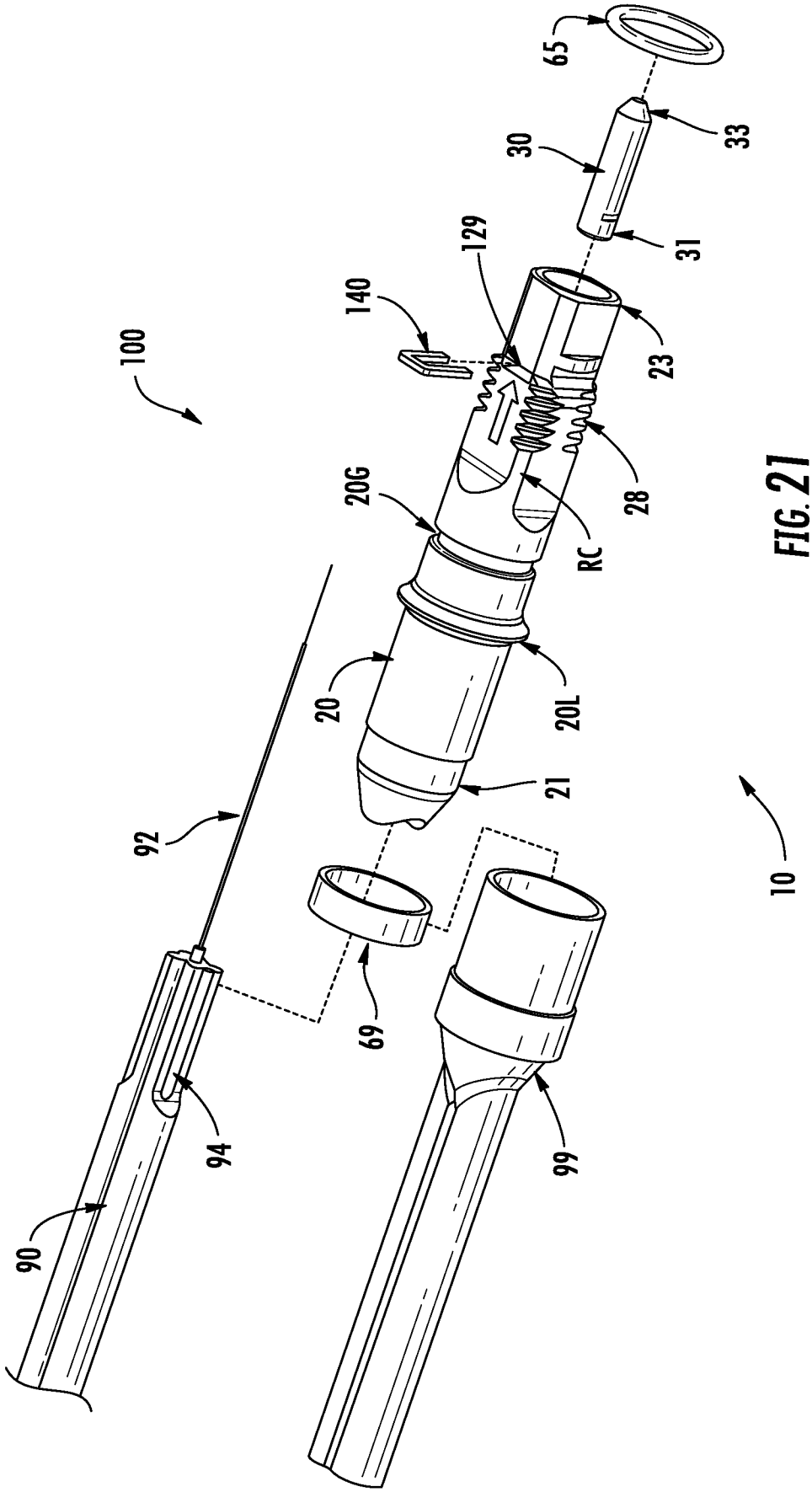

FIG. 21

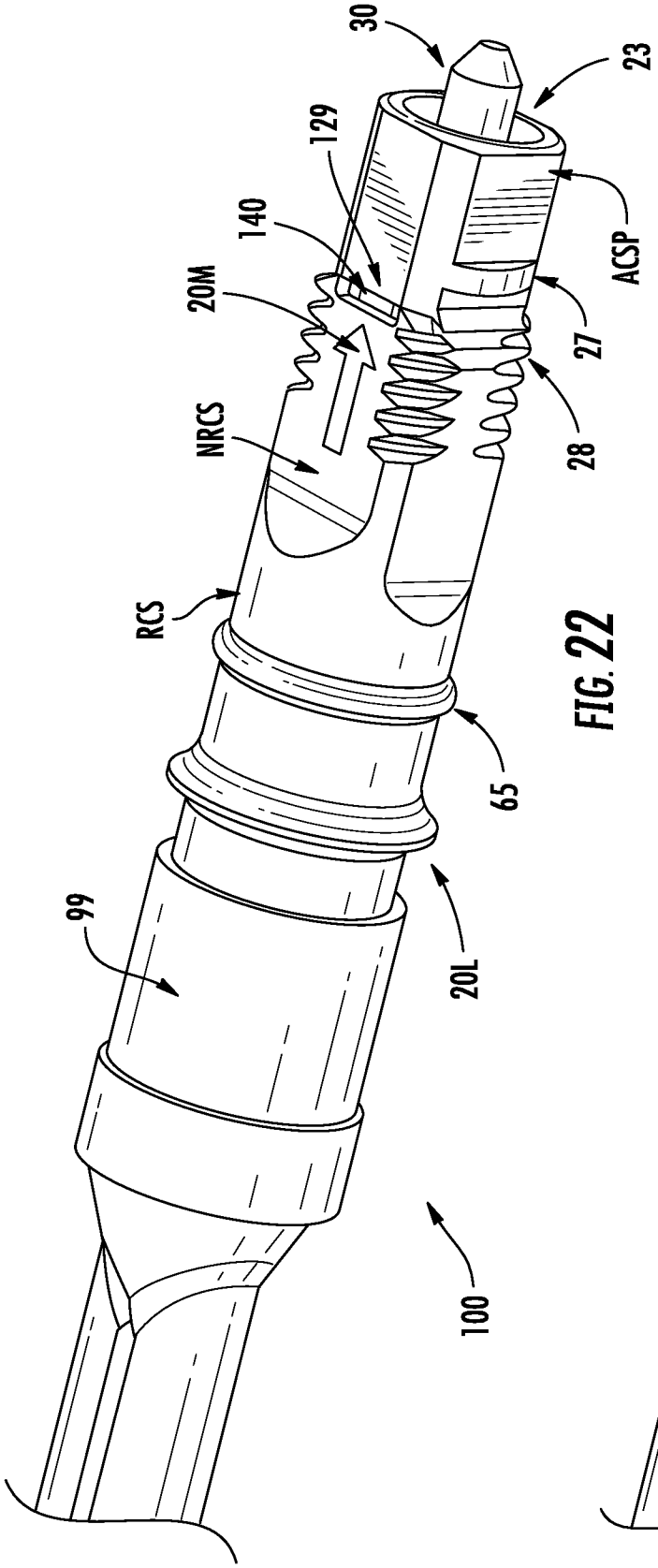

FIG. 22

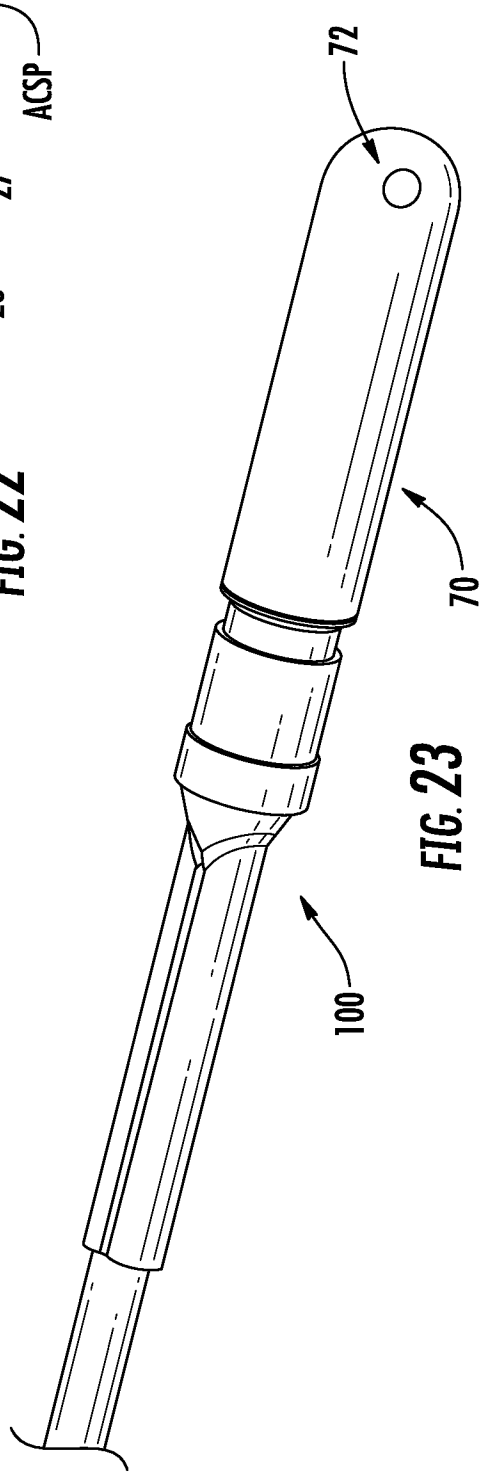

FIG. 23

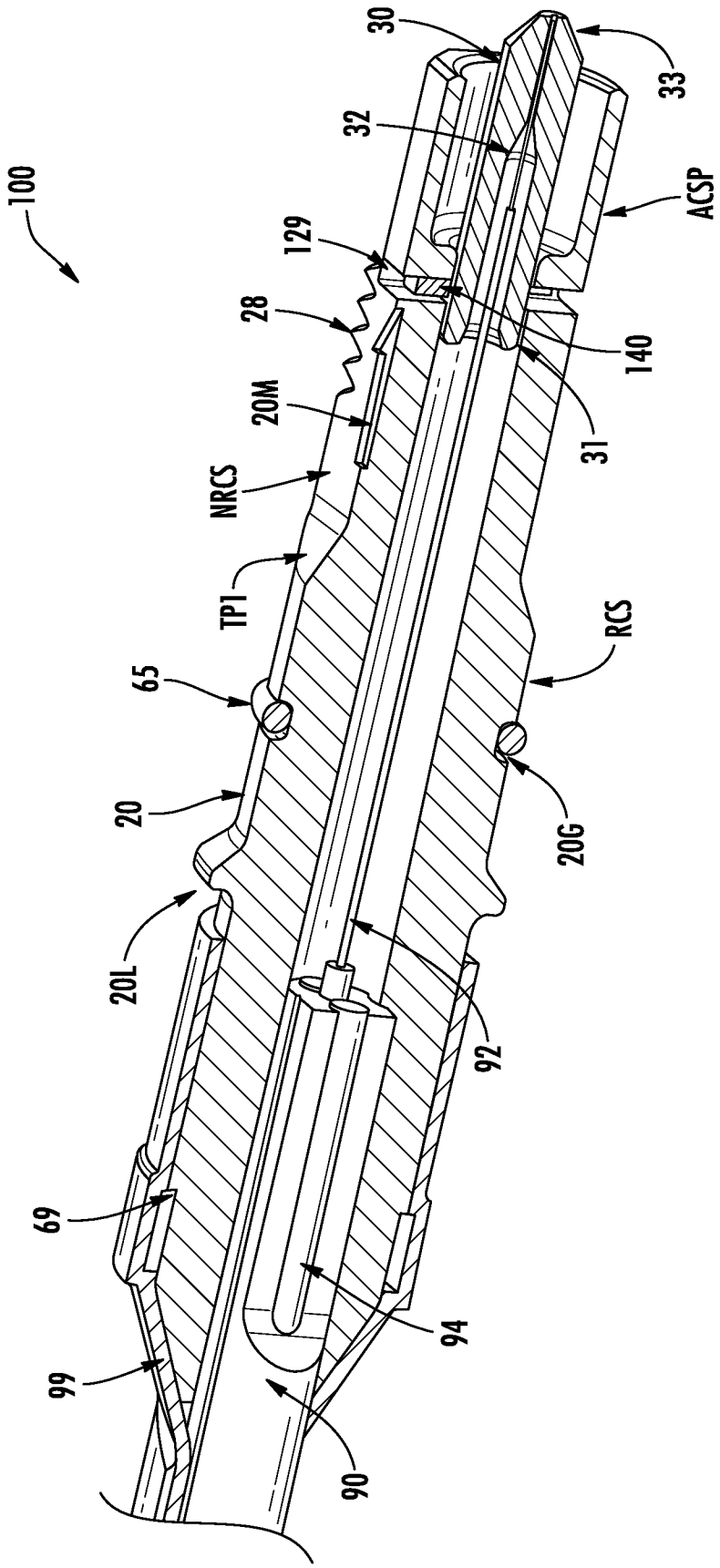
100
30
33
32
ACSP
129
28
140
20M
31
NRCS
TP1
RCS
65
20
20G
20L
92
69
94
99
90

FIG. 24

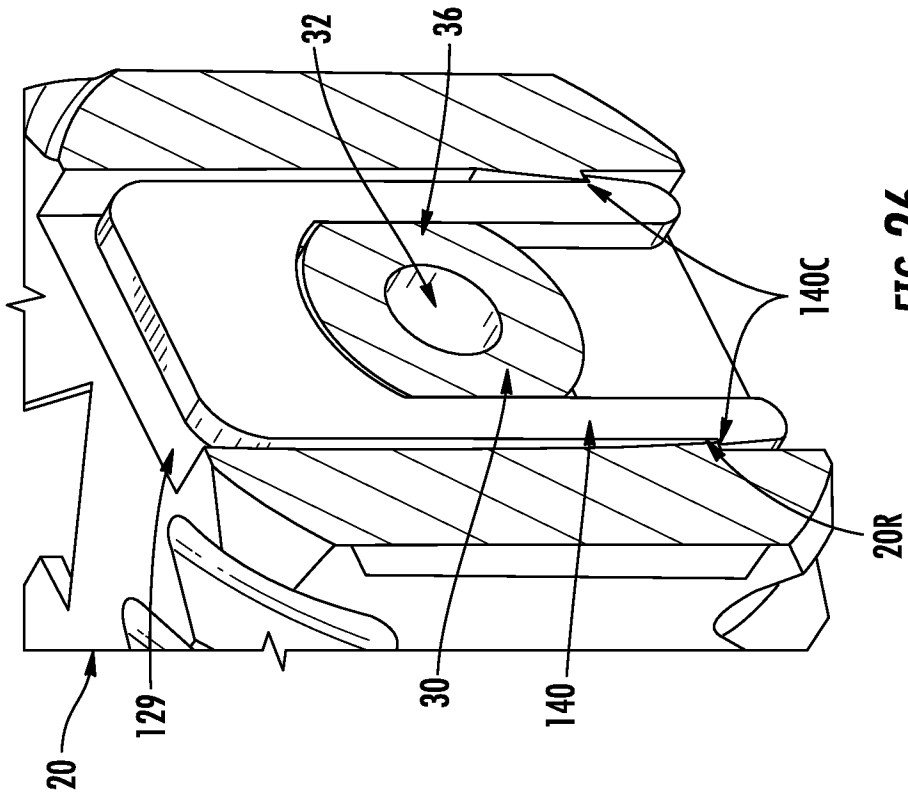

FIG. 26

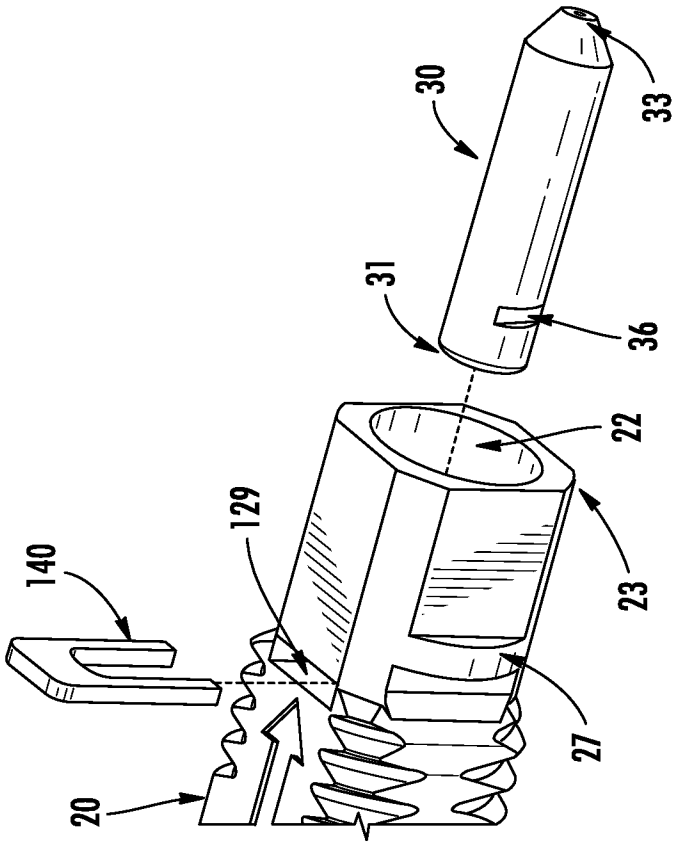

FIG. 25

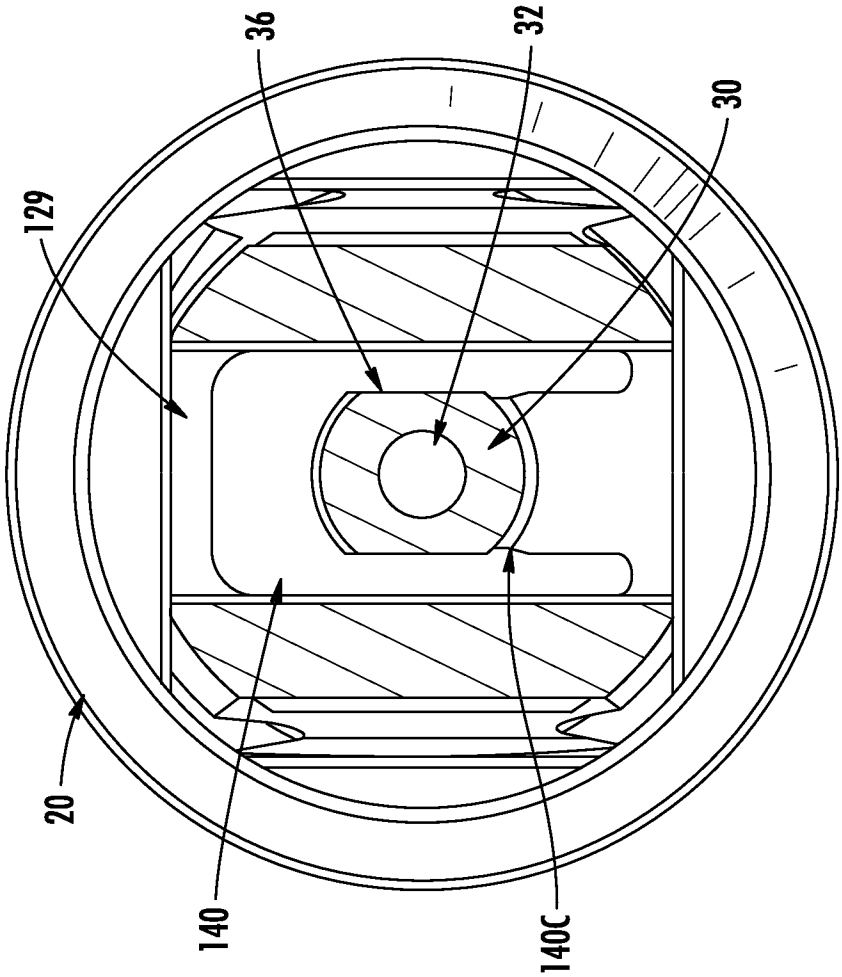

FIG. 28

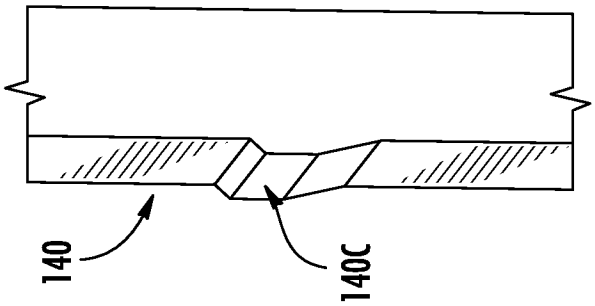

FIG. 27

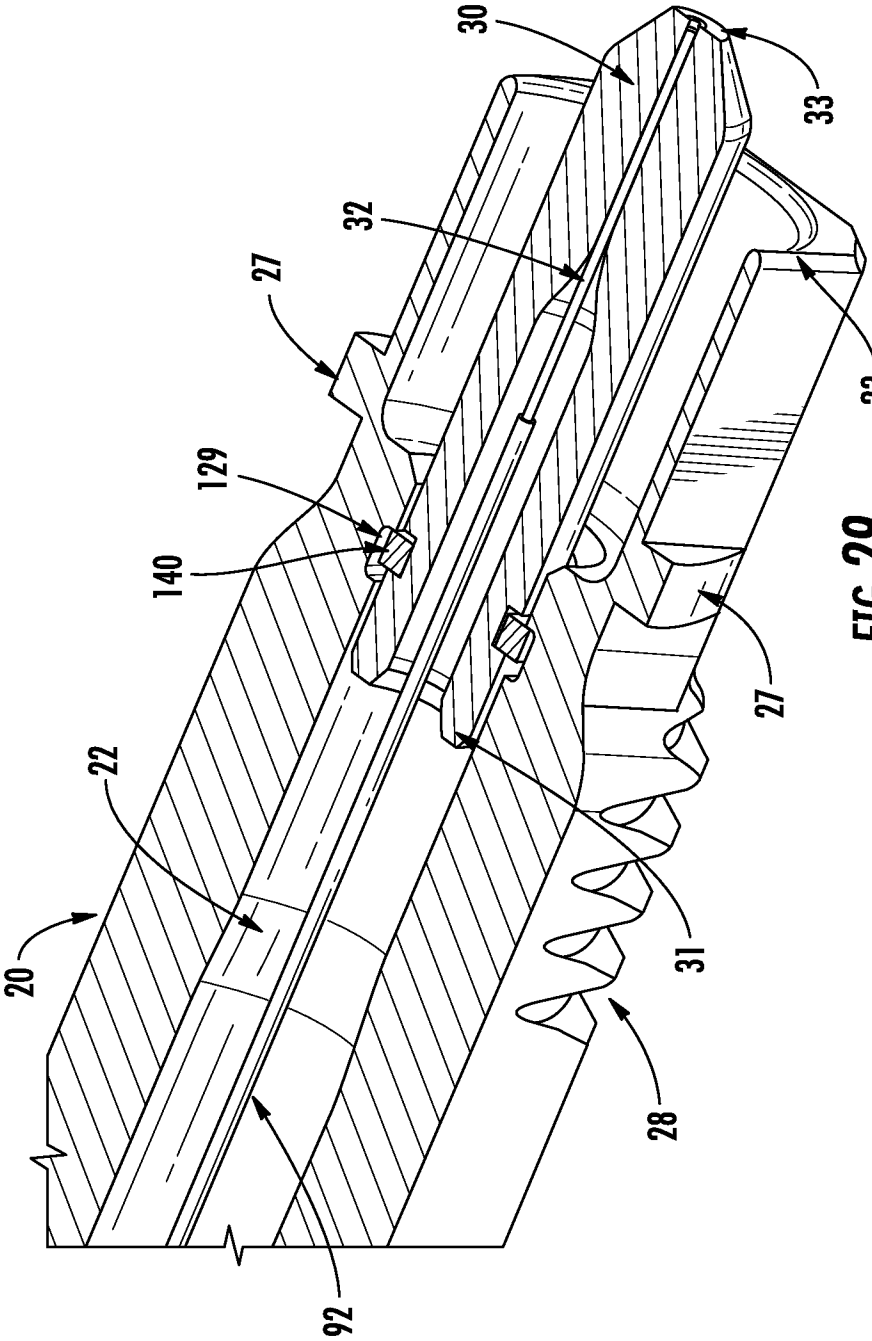

FIG. 29

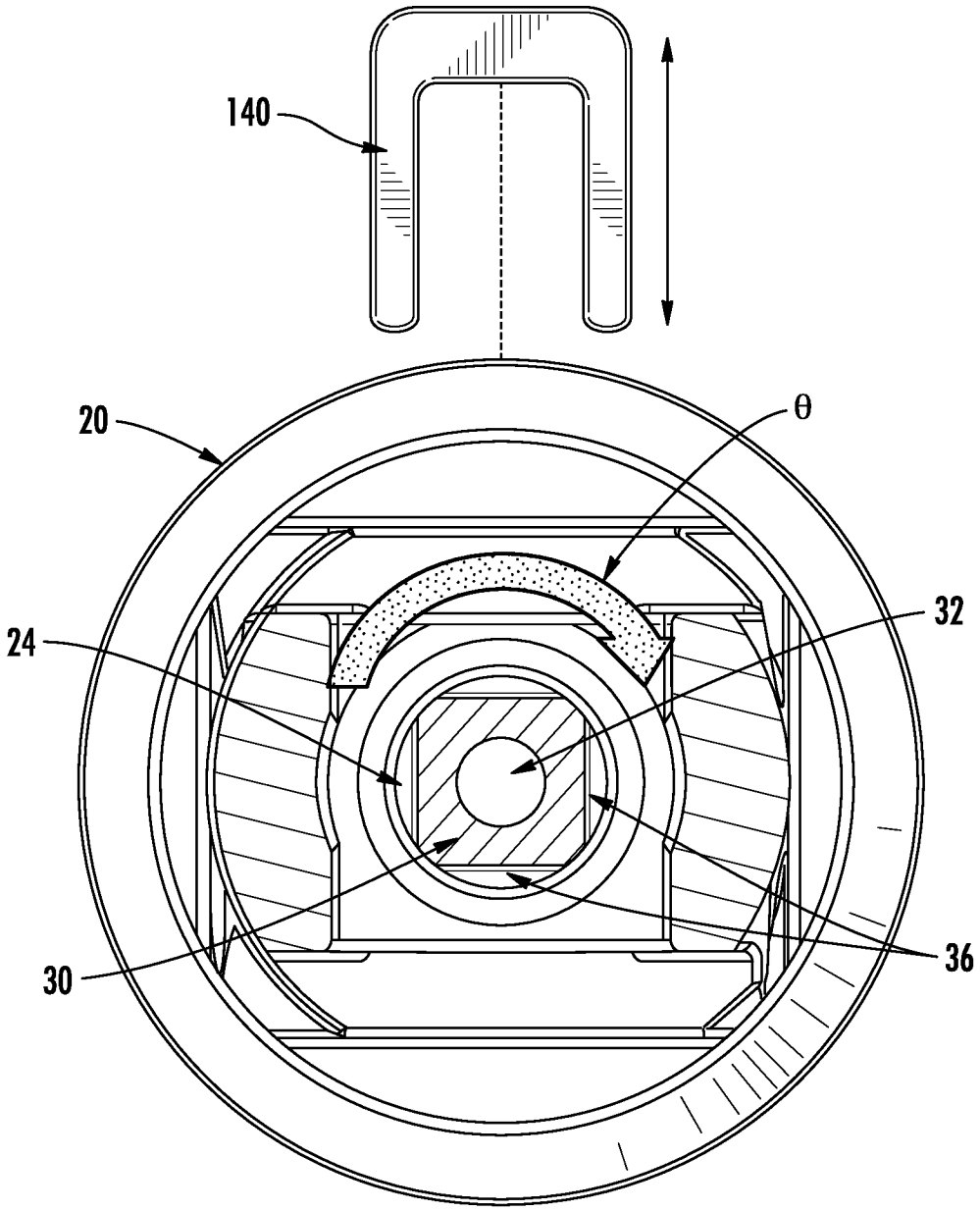

FIG. 30

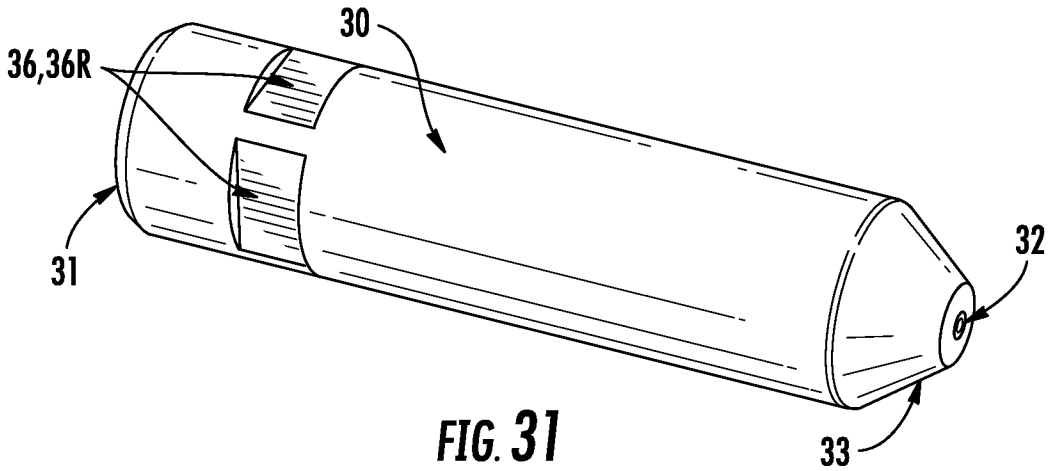

FIG. 31

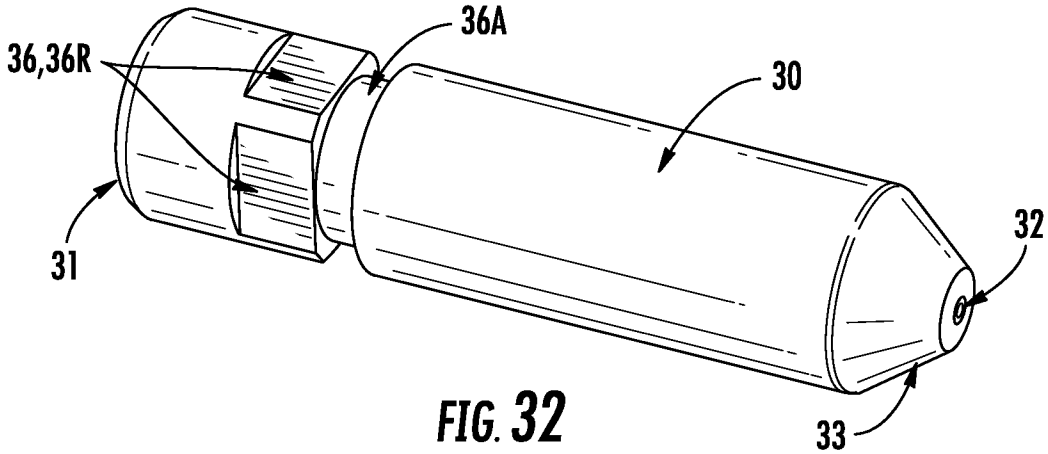

FIG. 32

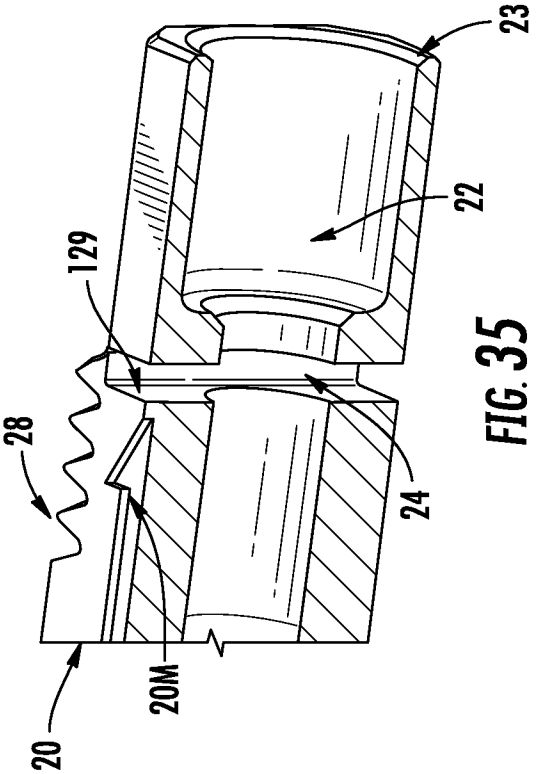

FIG. 35

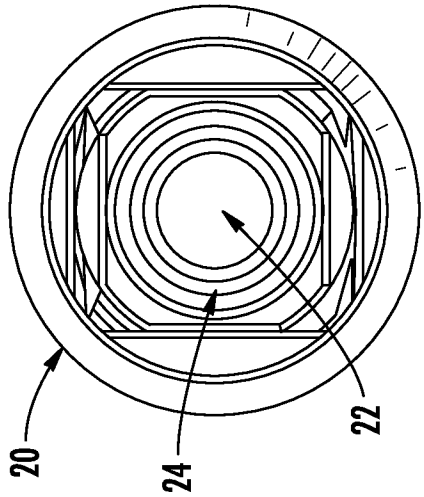

FIG. 36

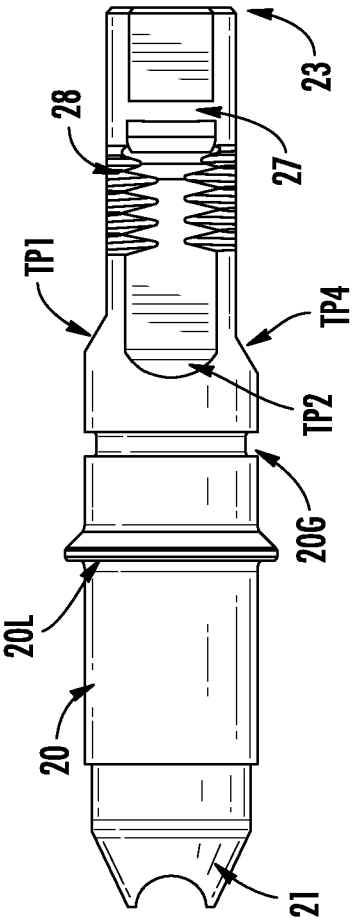

FIG. 33

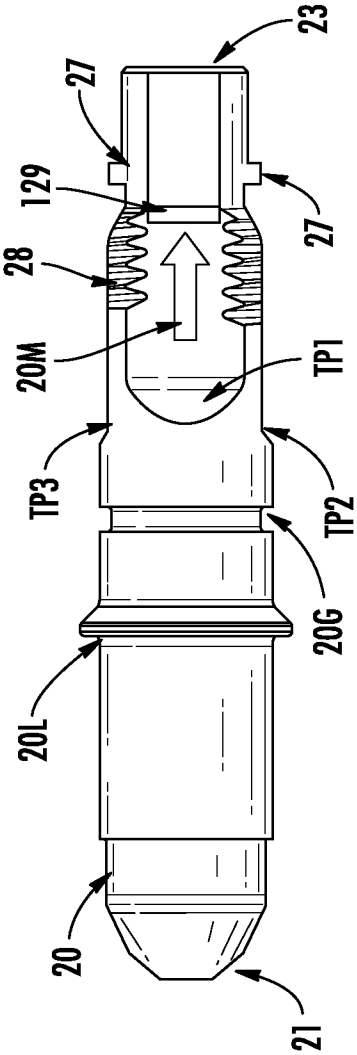

FIG. 34

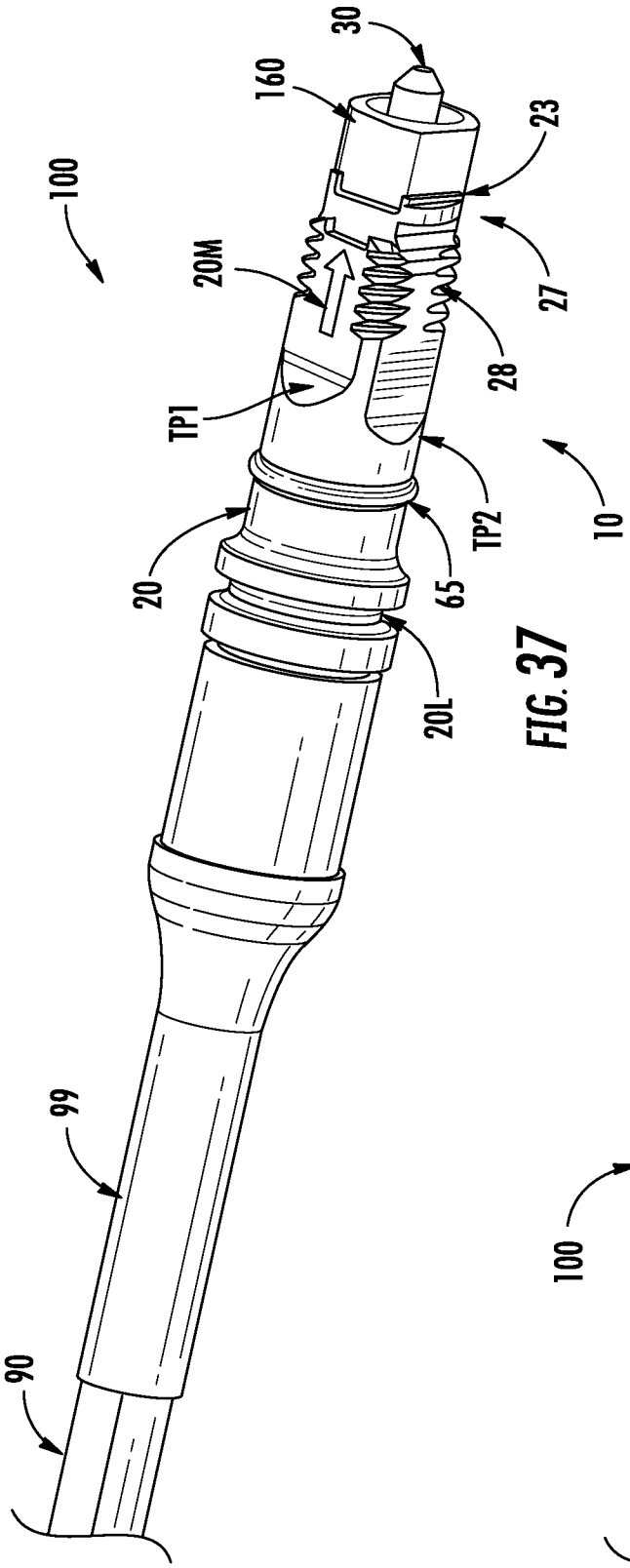

FIG. 37

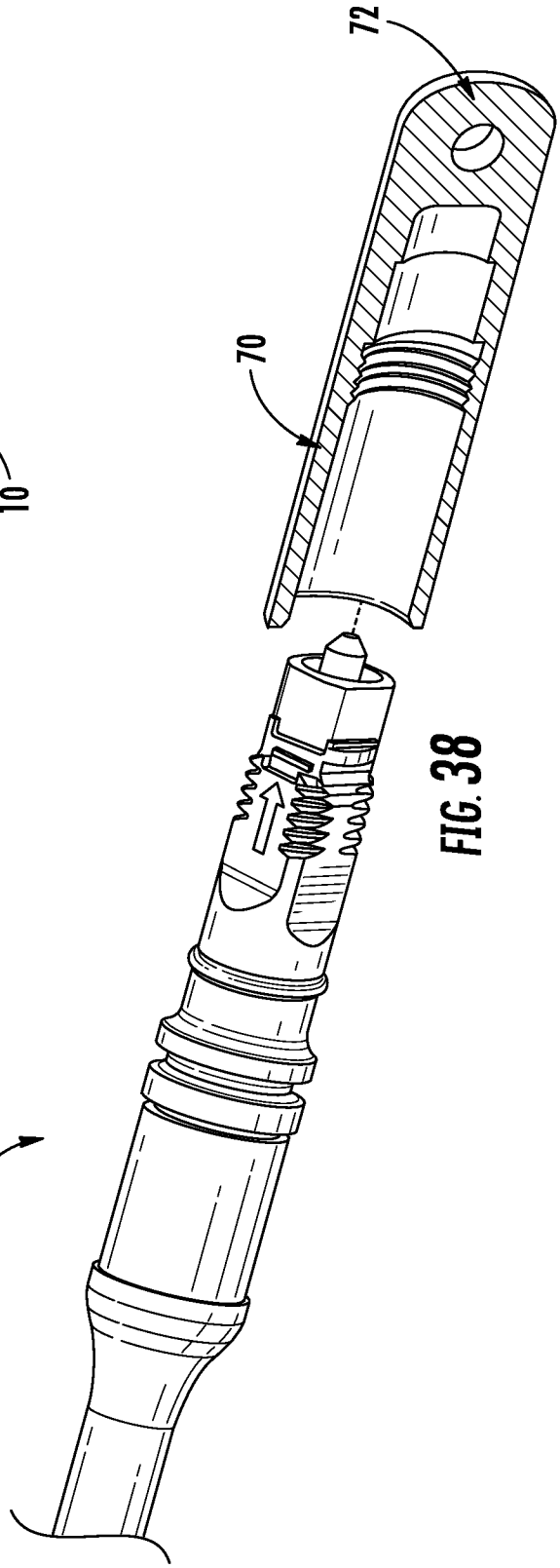

FIG. 38

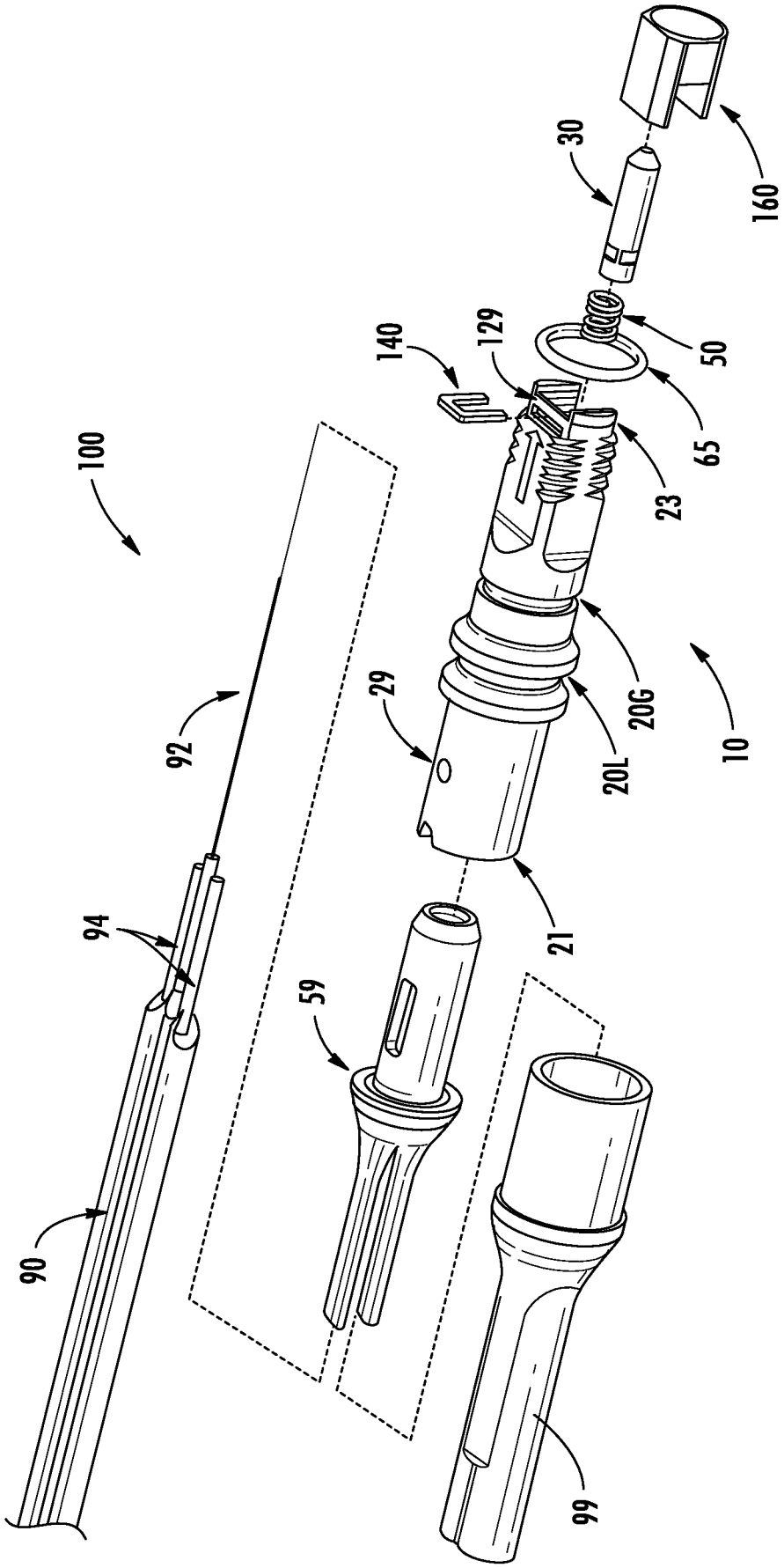

FIG. 39

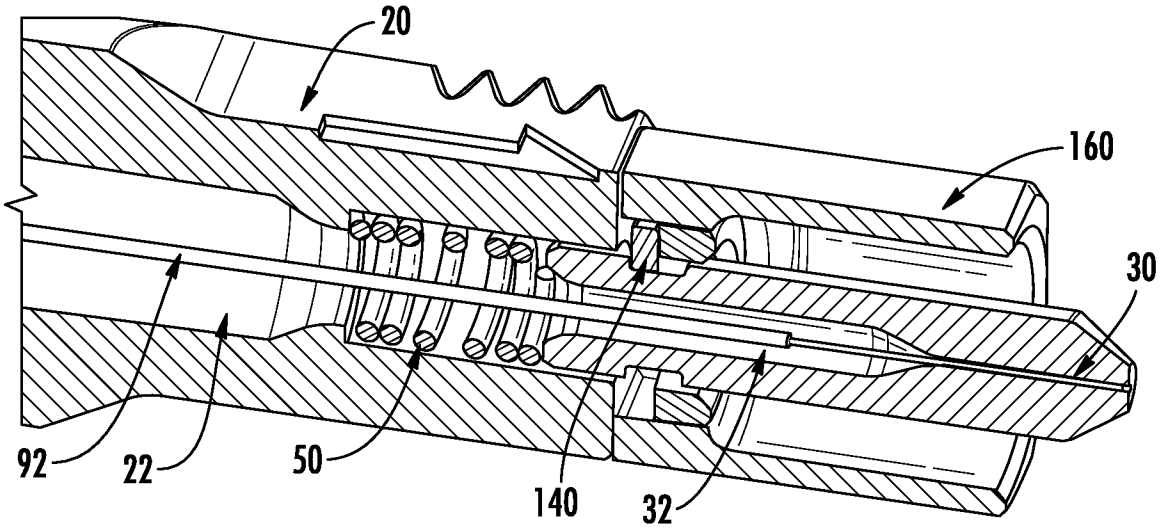

FIG. 40

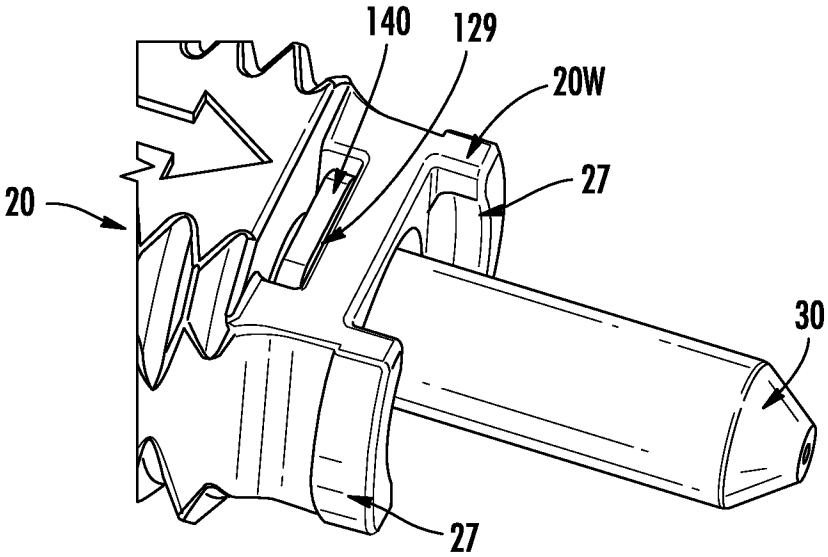

FIG. 41

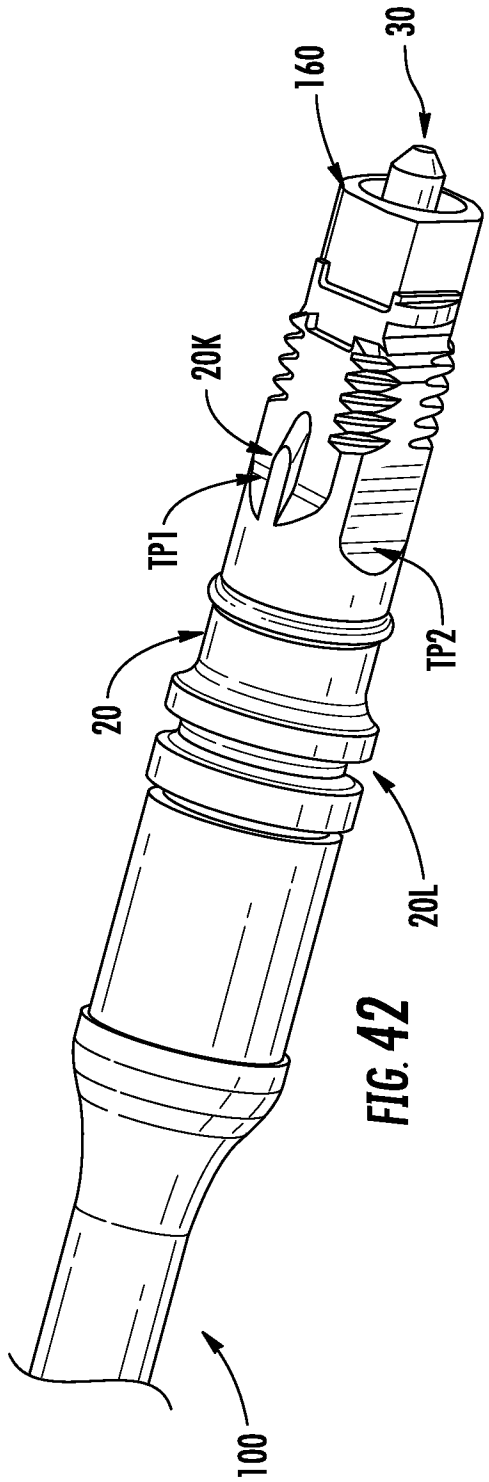
30
160
20K
TP1
20
TP2
20L
100

FIG. 42

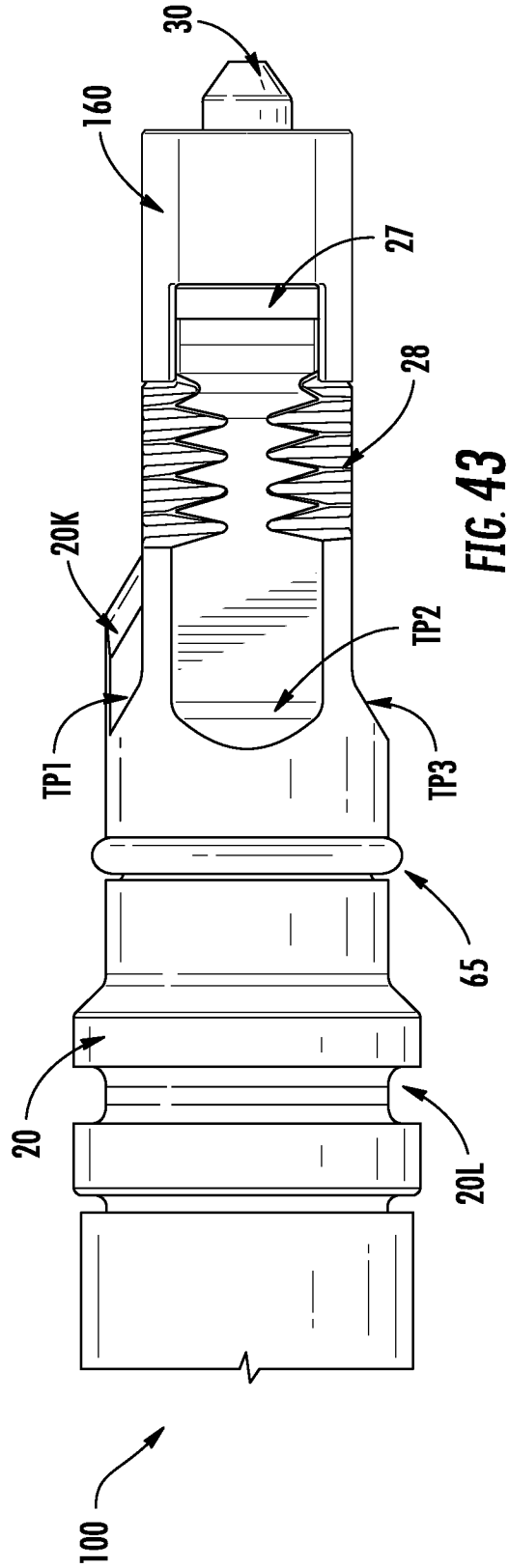
30
160
27
28
20K
TP2
TP1
TP3
65
20
20L
100

FIG. 43

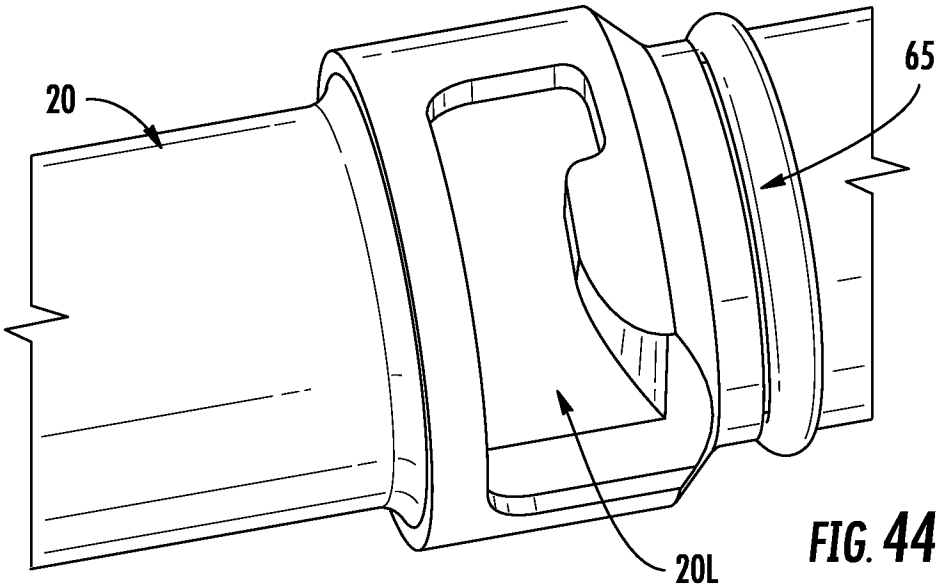

FIG. 44

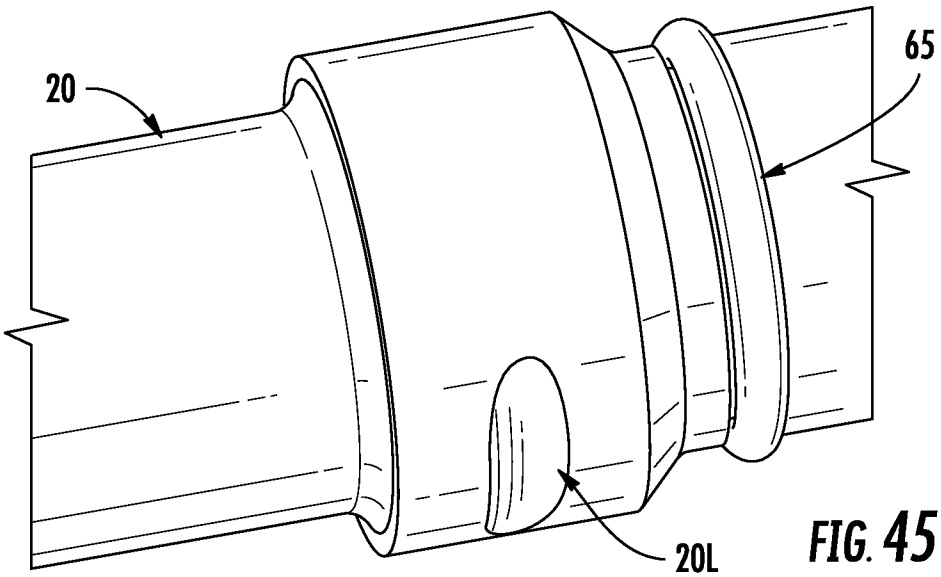

FIG. 45

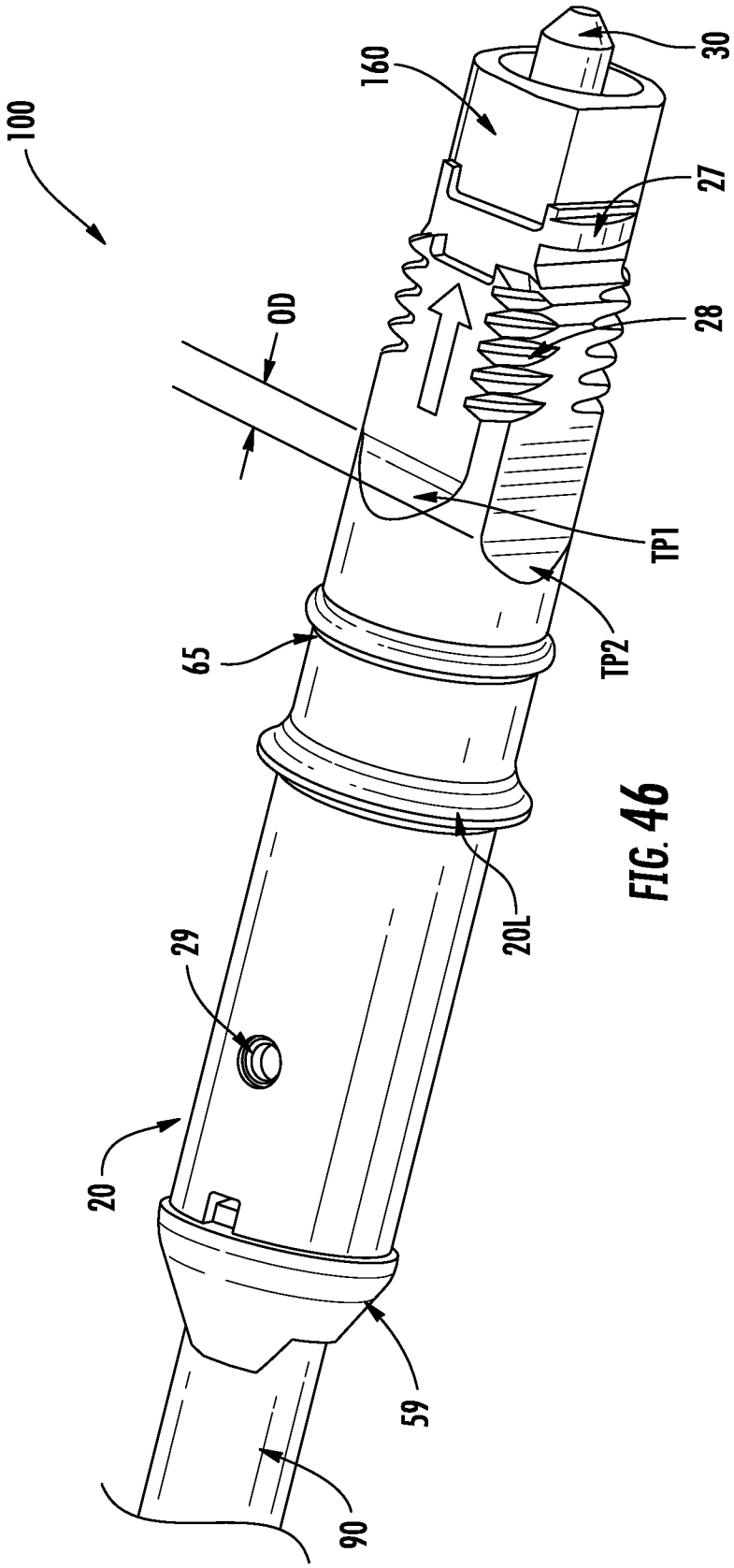

FIG. 46

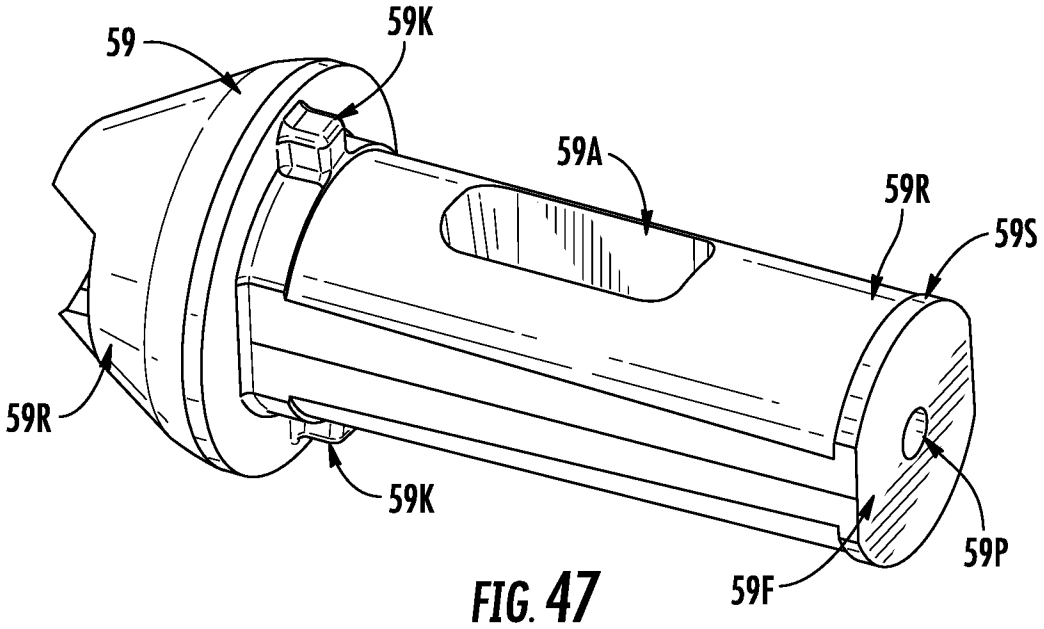

FIG. 47

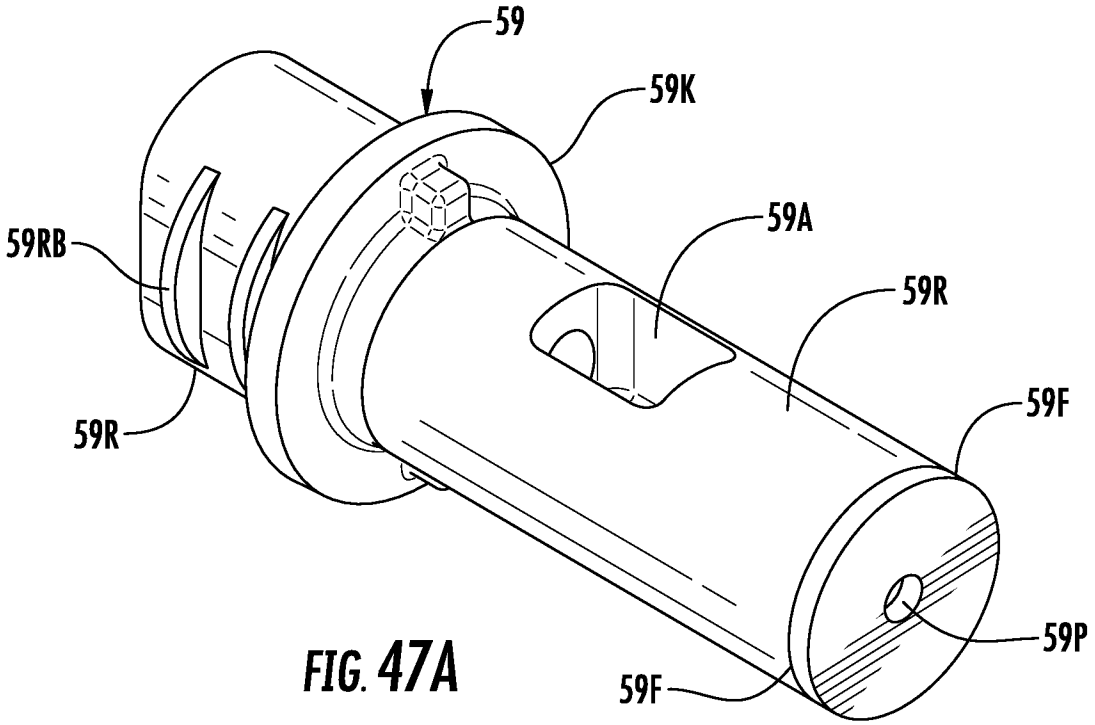

FIG. 47A

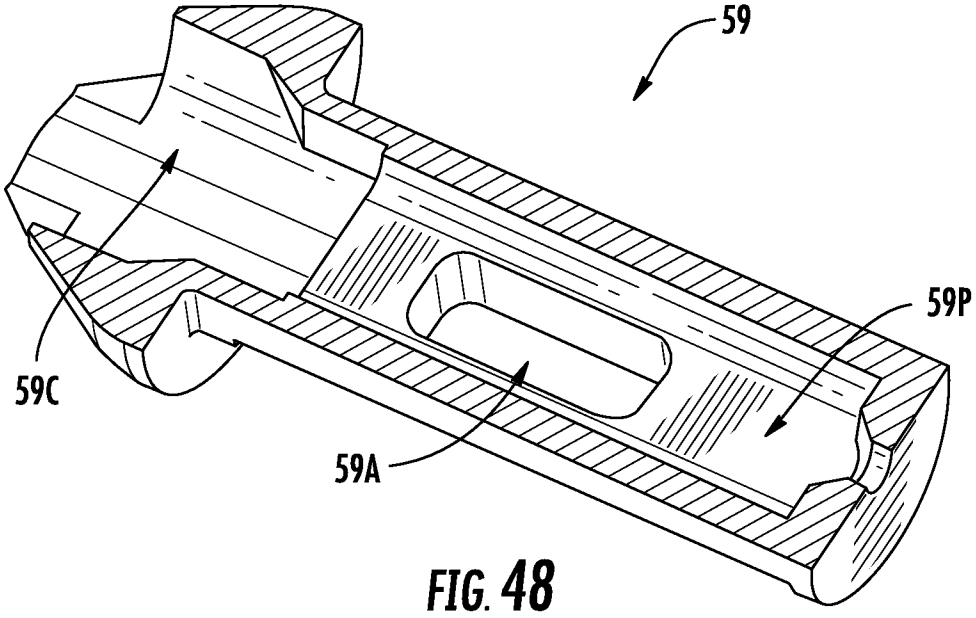

FIG. 48

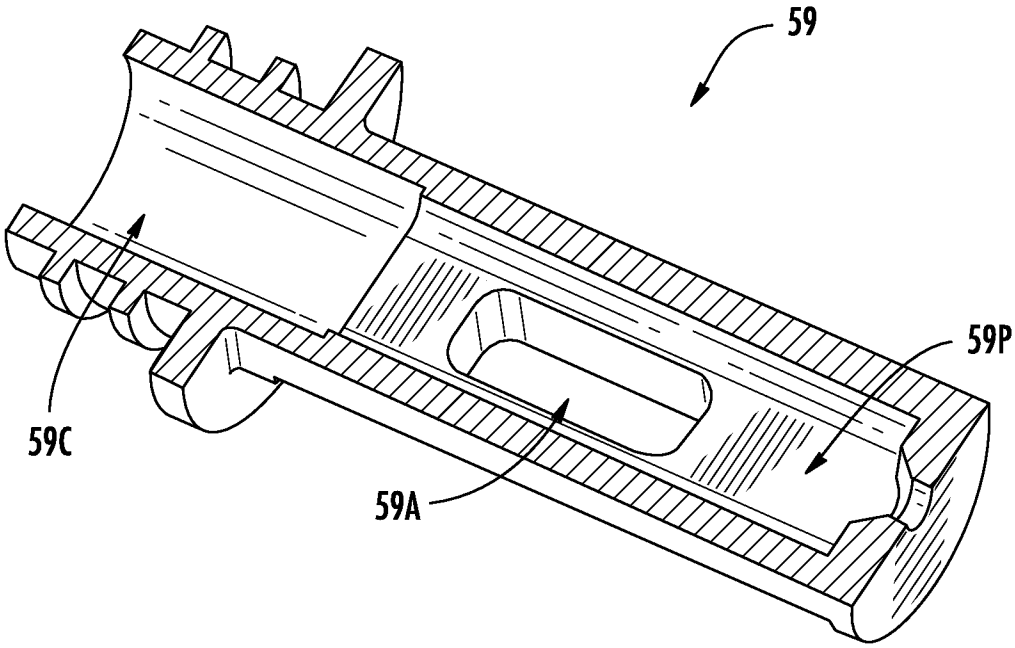

FIG. 48A

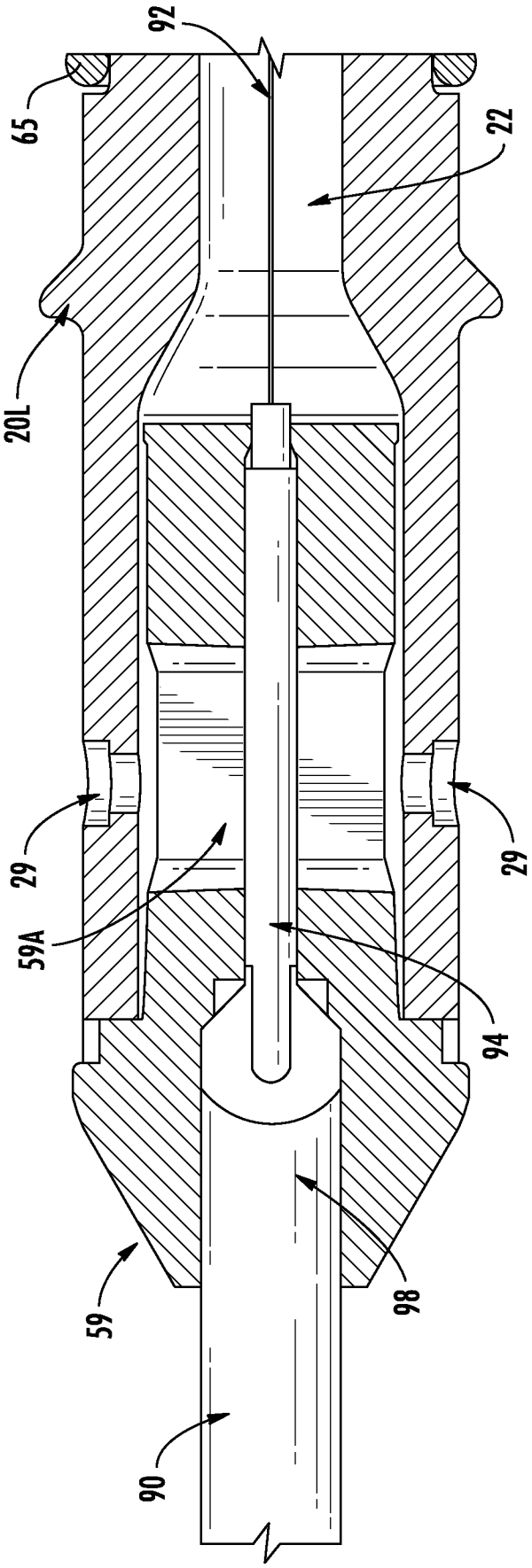

FIG. 49

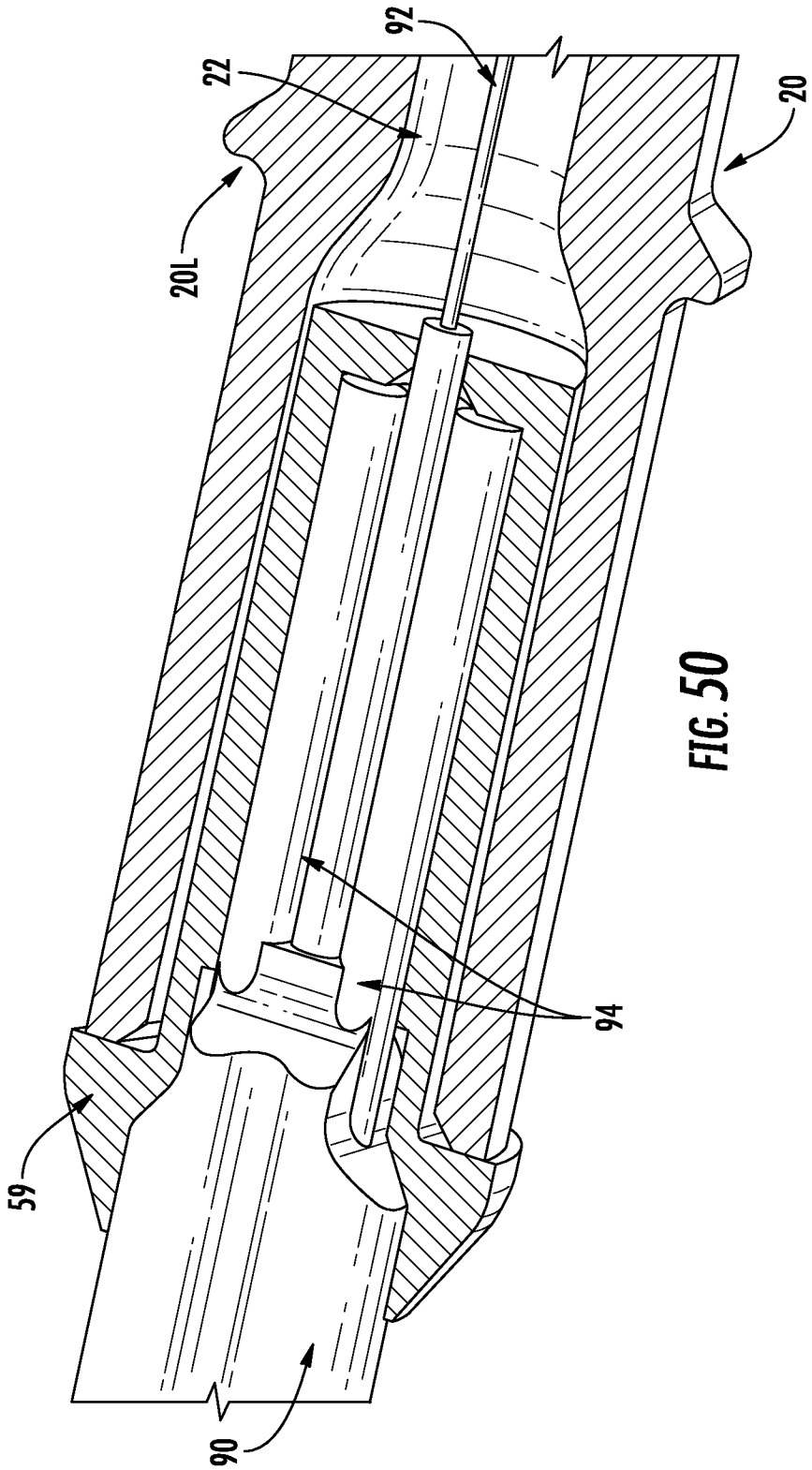

FIG. 50

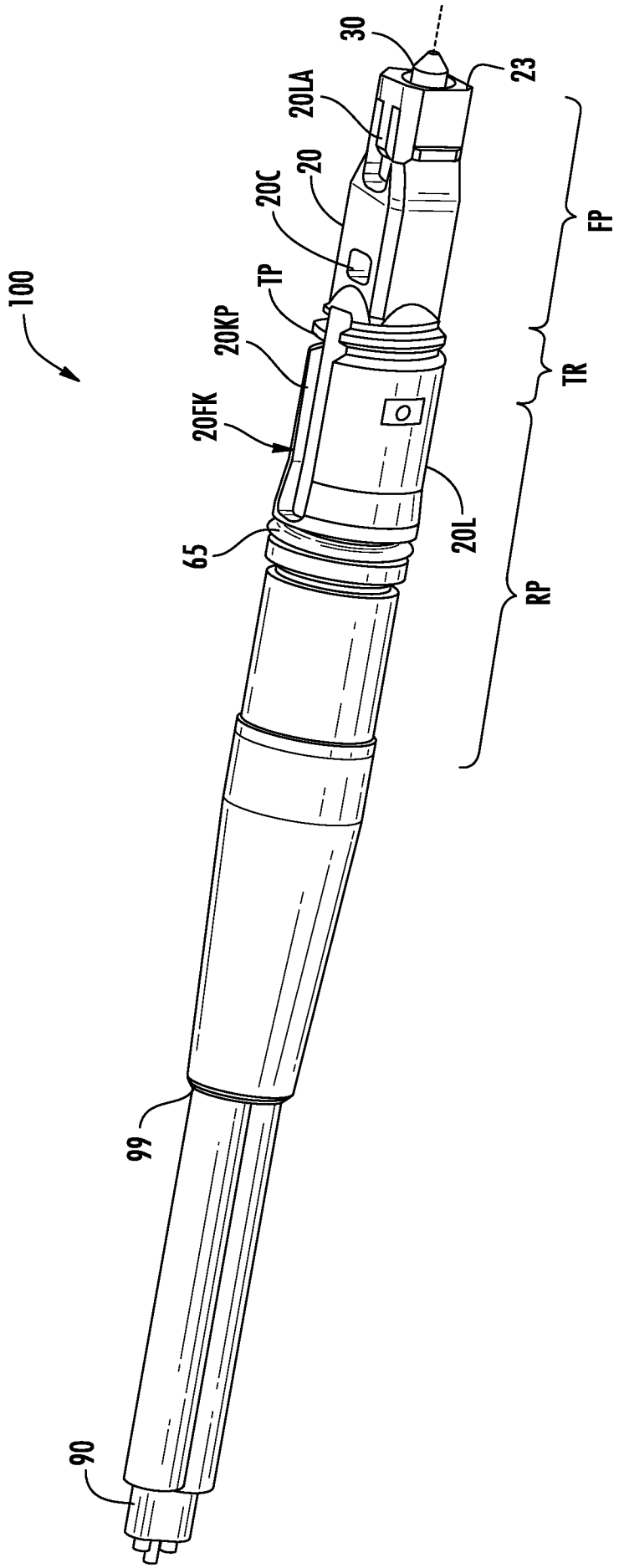

FIG. 51

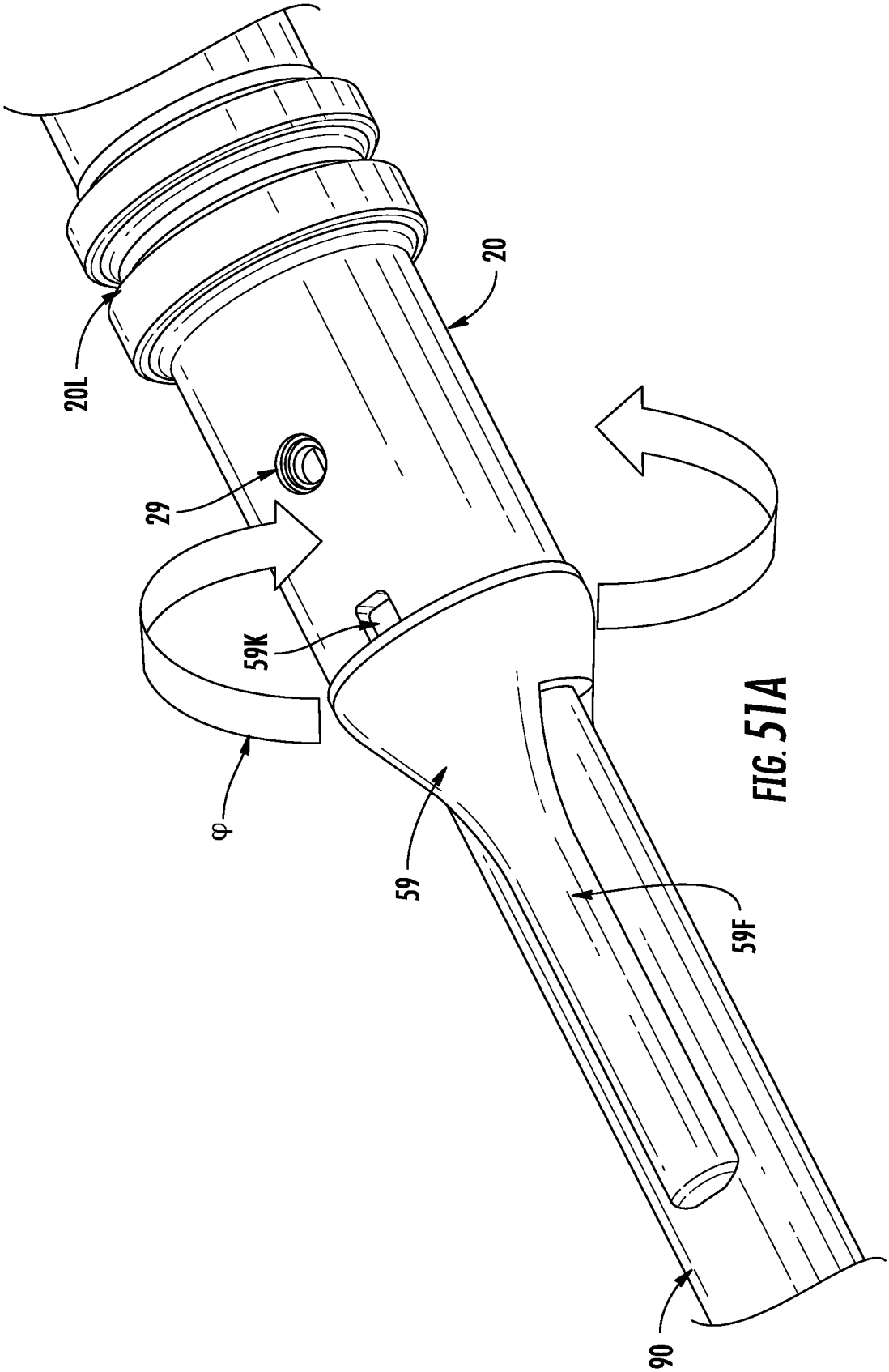

FIG. 51A

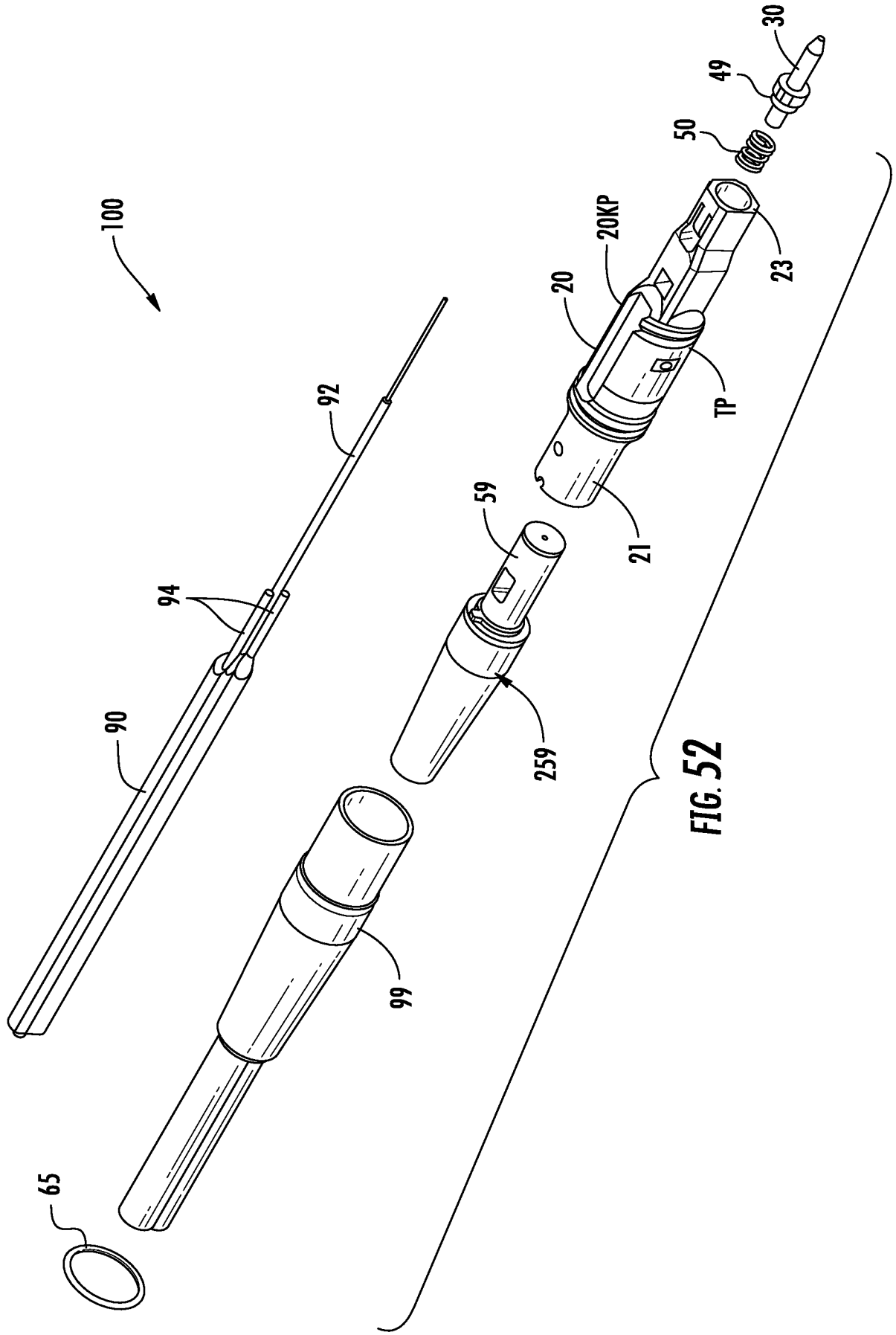

FIG. 52

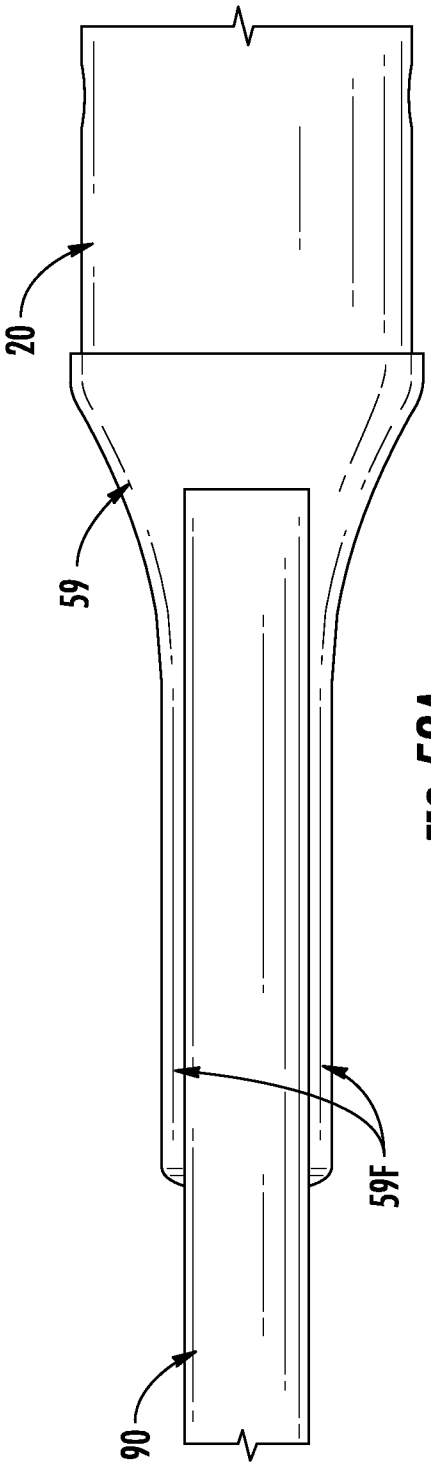

FIG. 52A

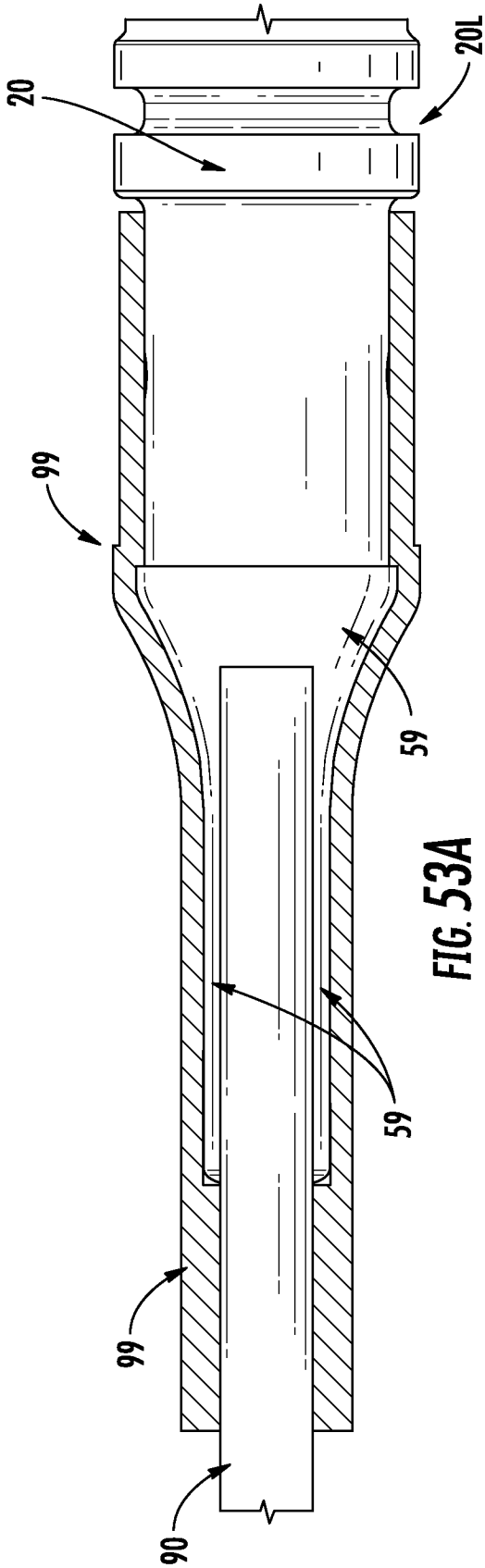

FIG. 53A

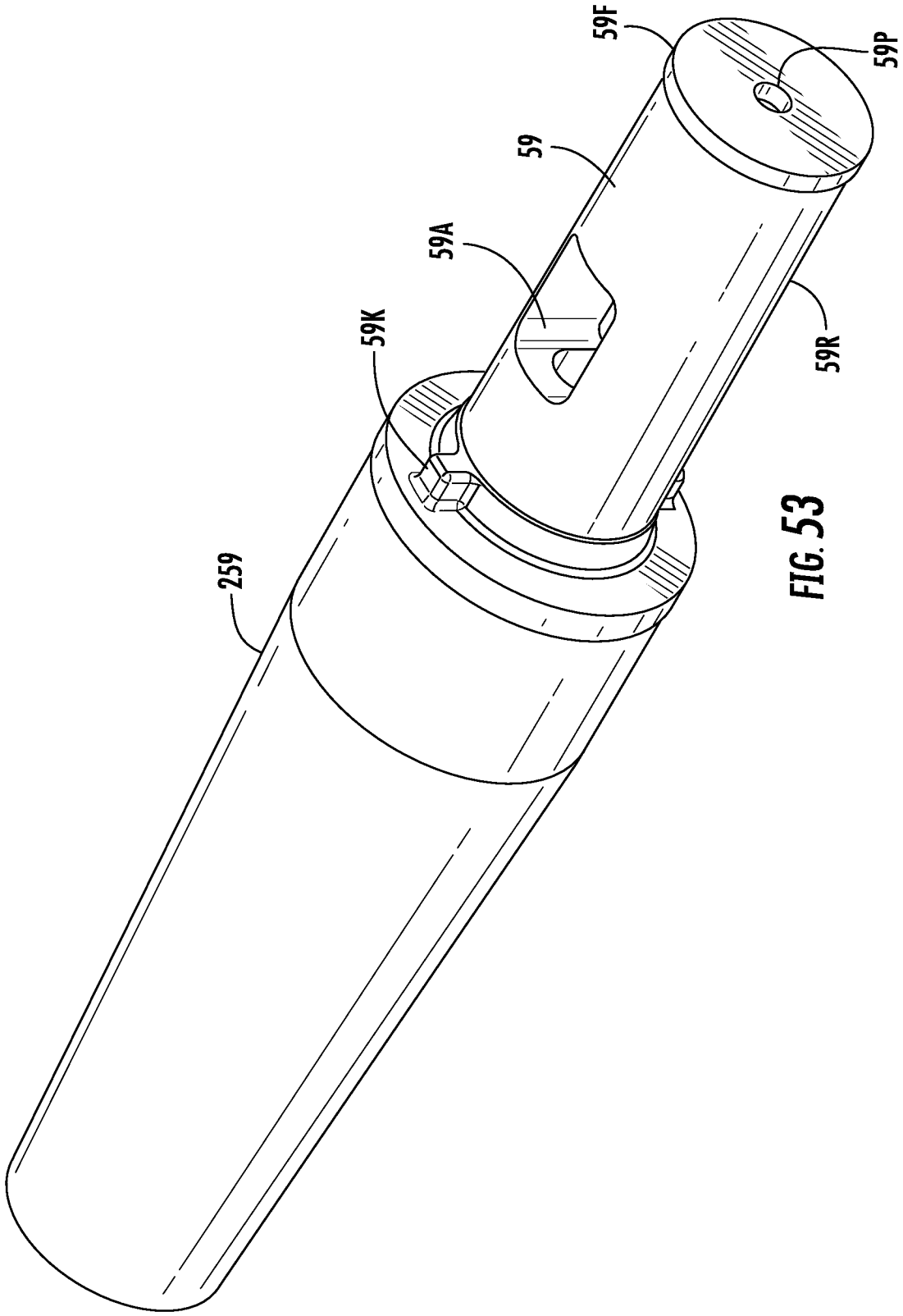

FIG. 53

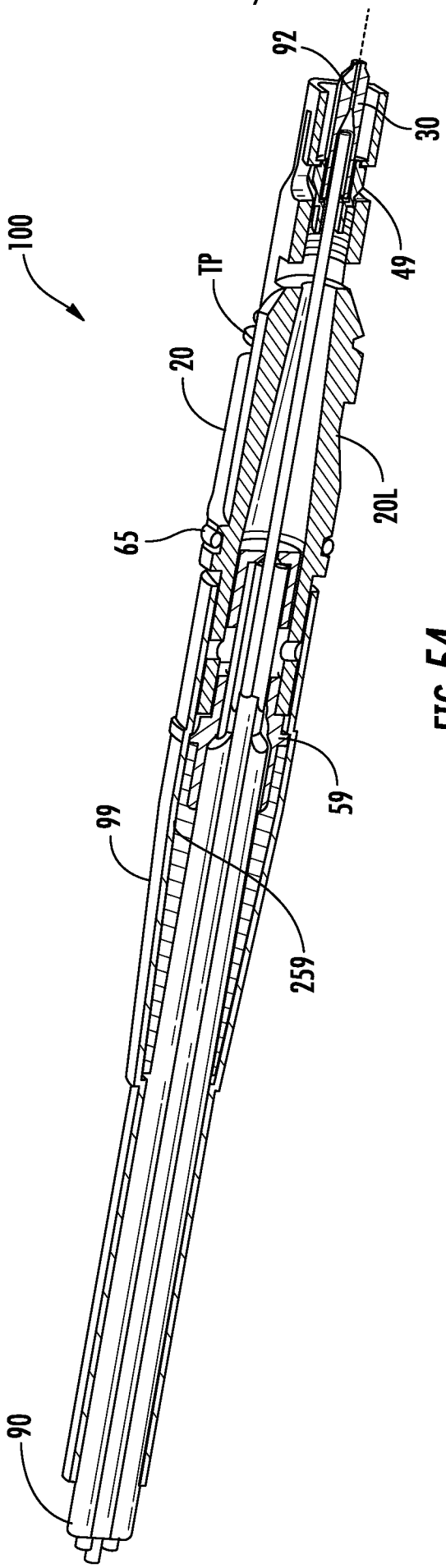

FIG. 54

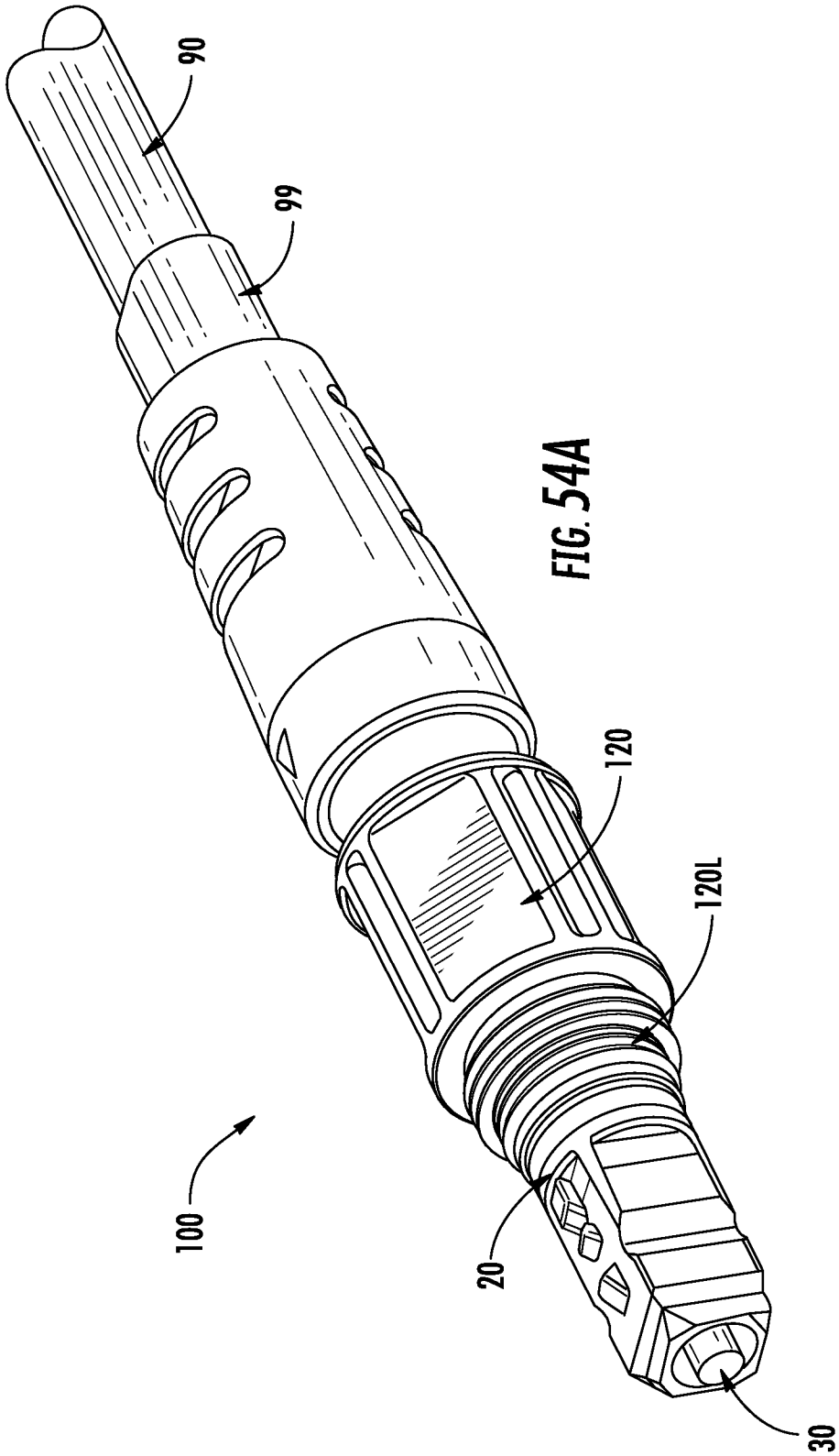

FIG. 54A

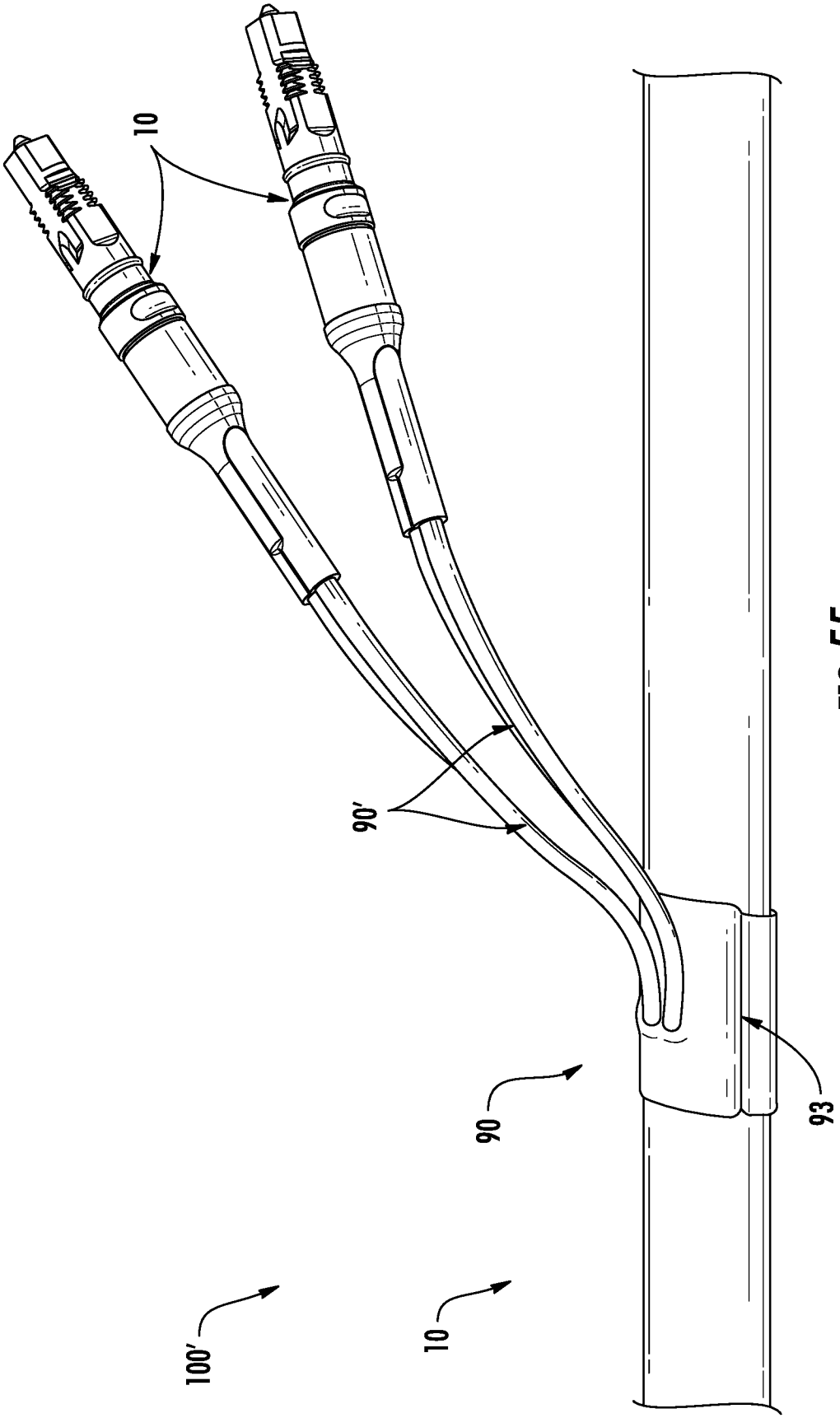

FIG. 55

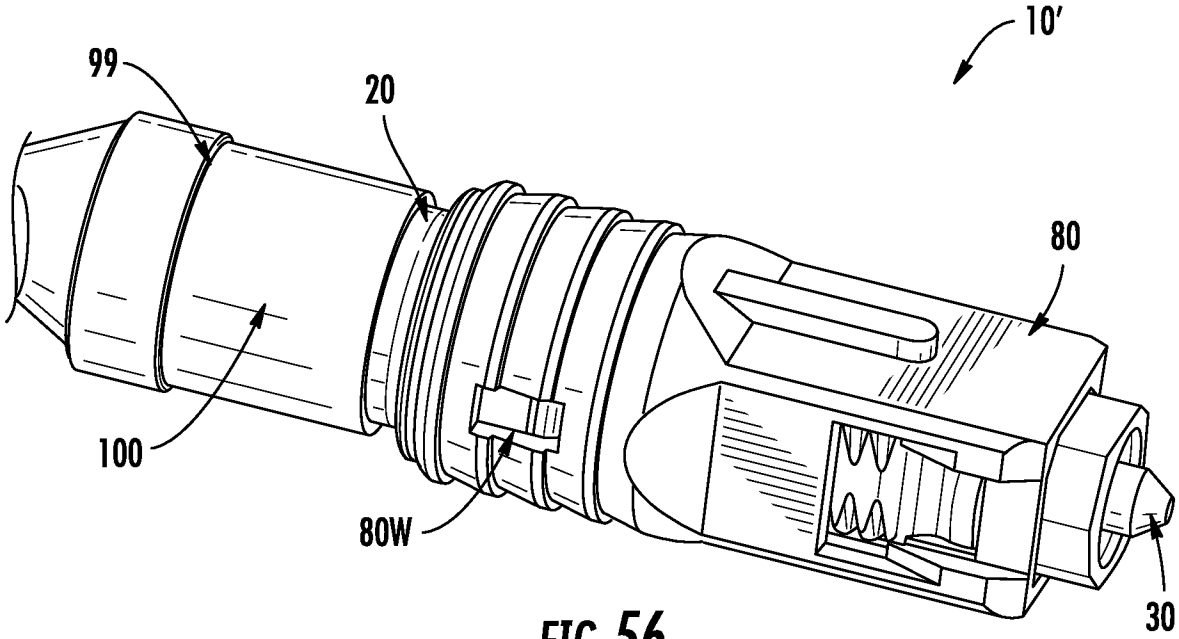

FIG. 56

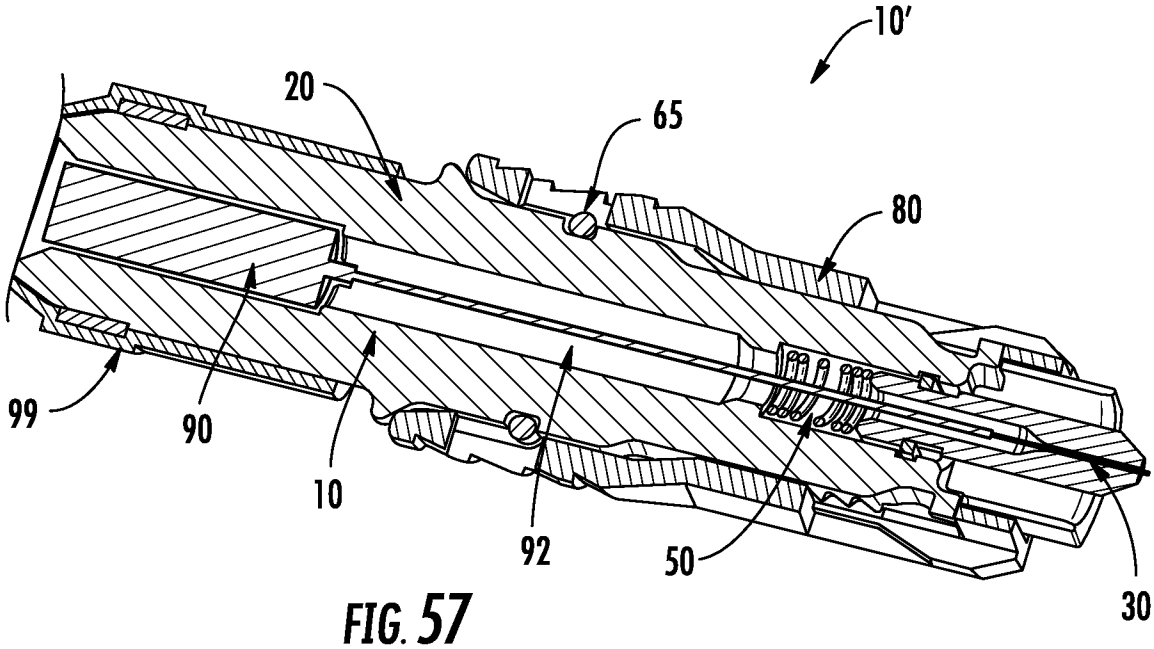

FIG. 57

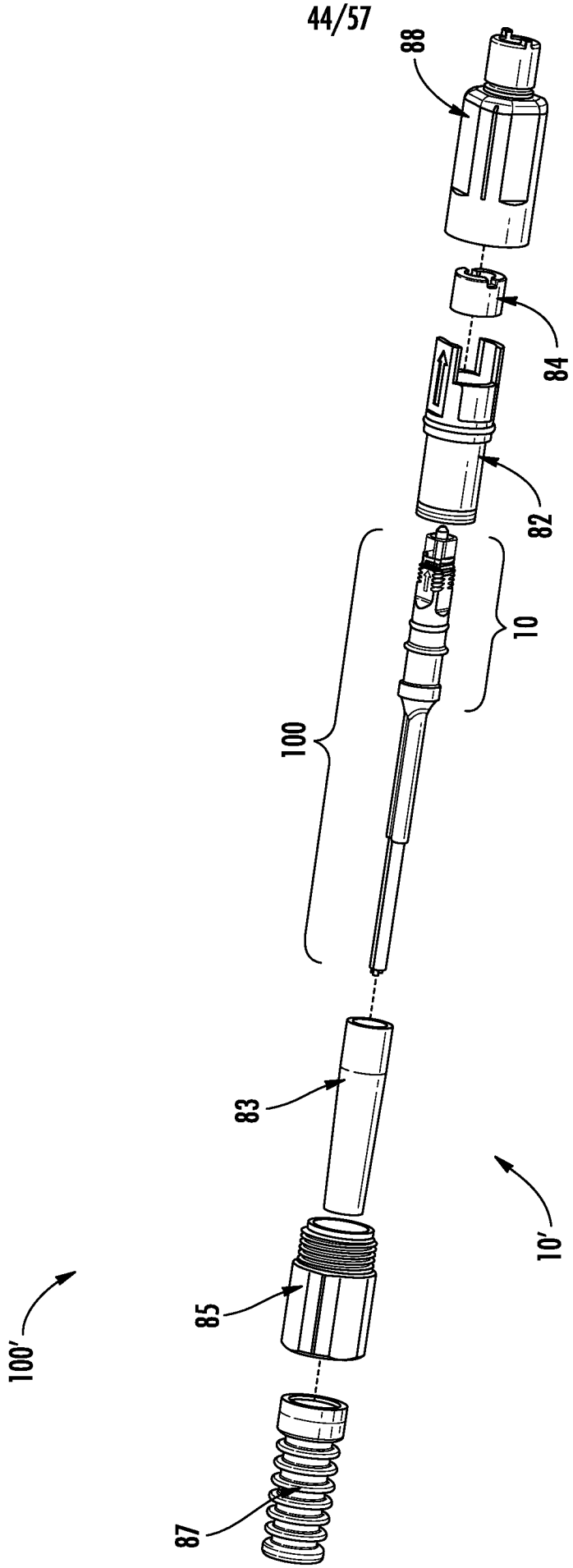

FIG. 58

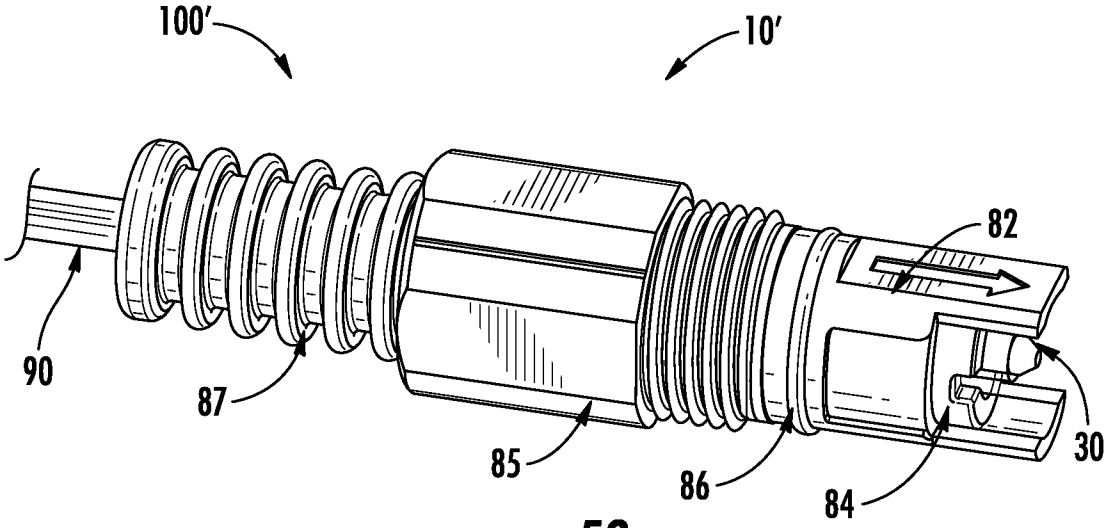

FIG. 59

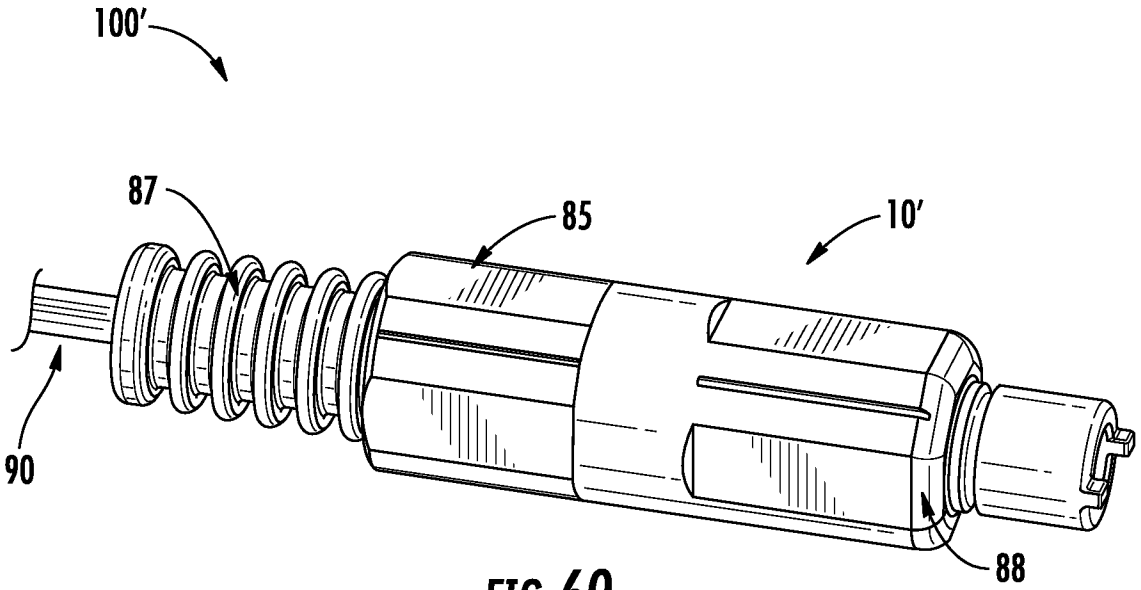

FIG. 60

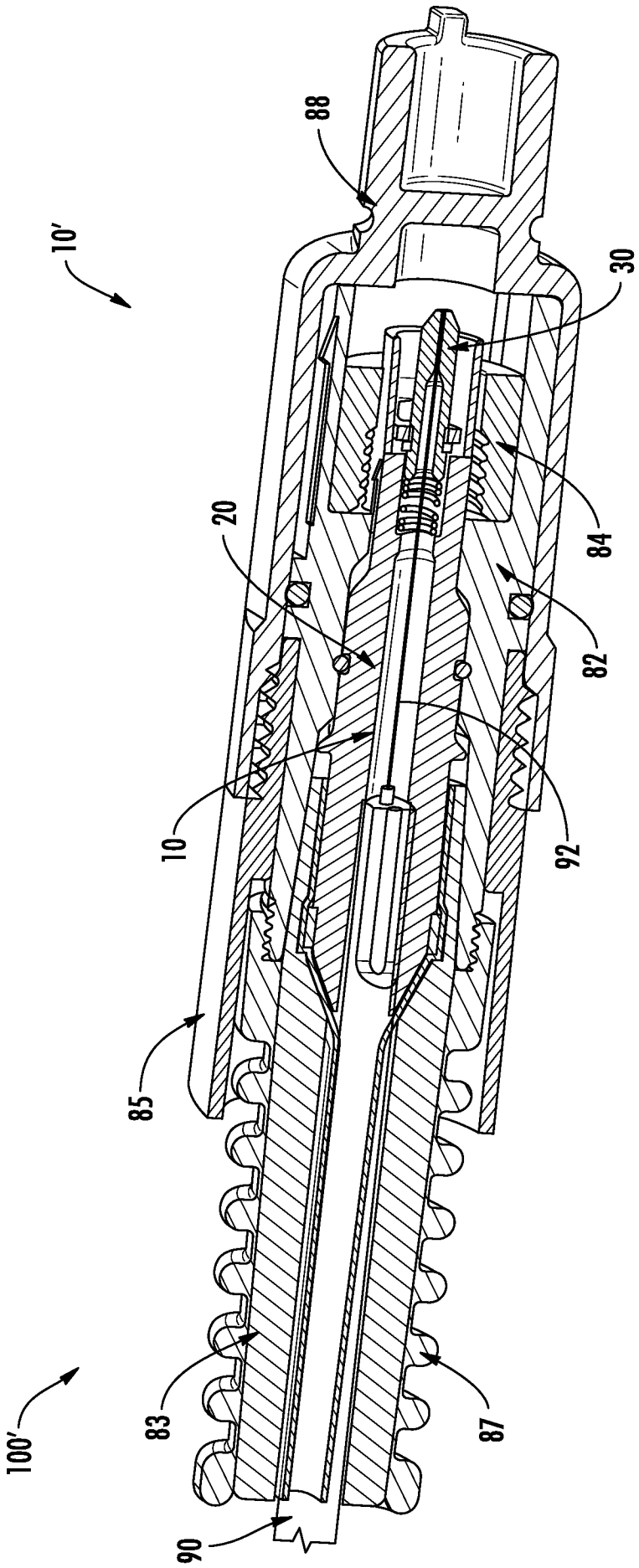

FIG. 61

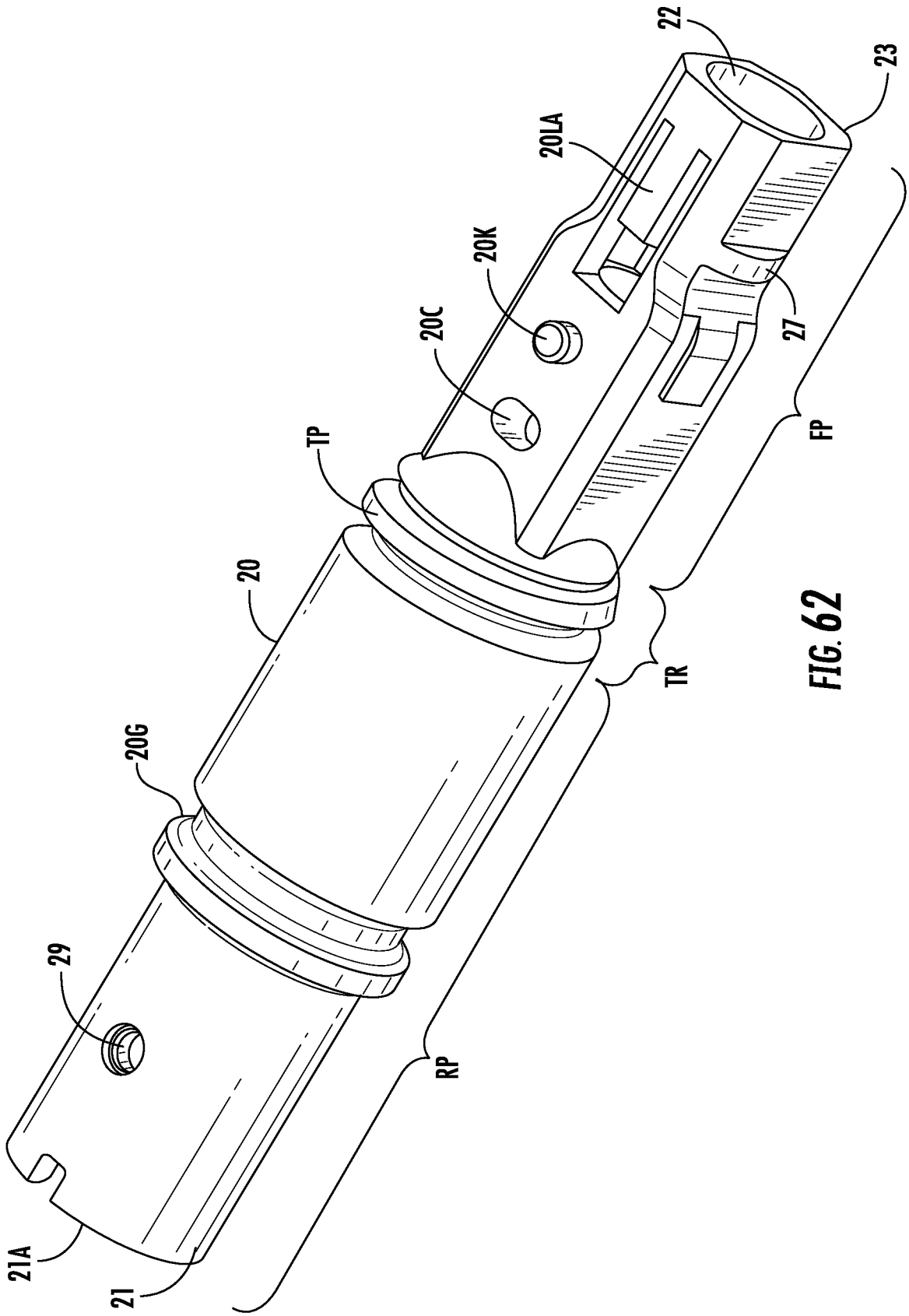

FIG. 62

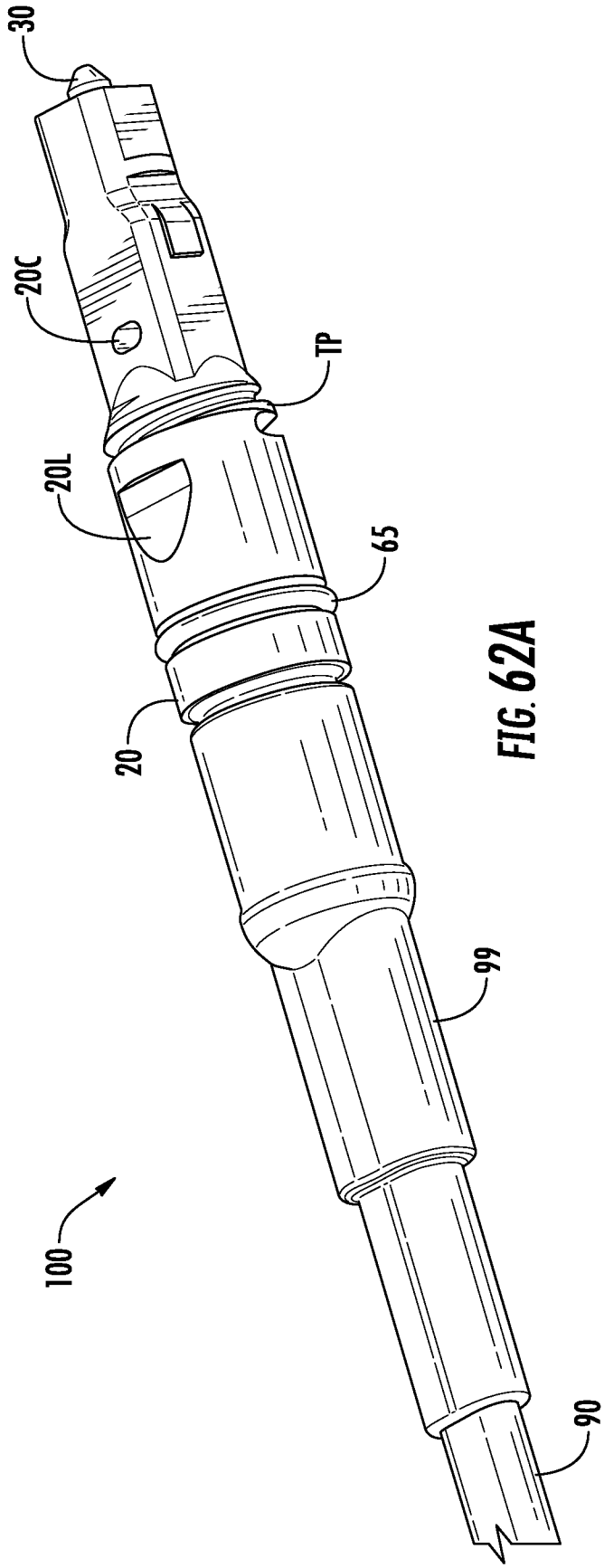

FIG. 62A

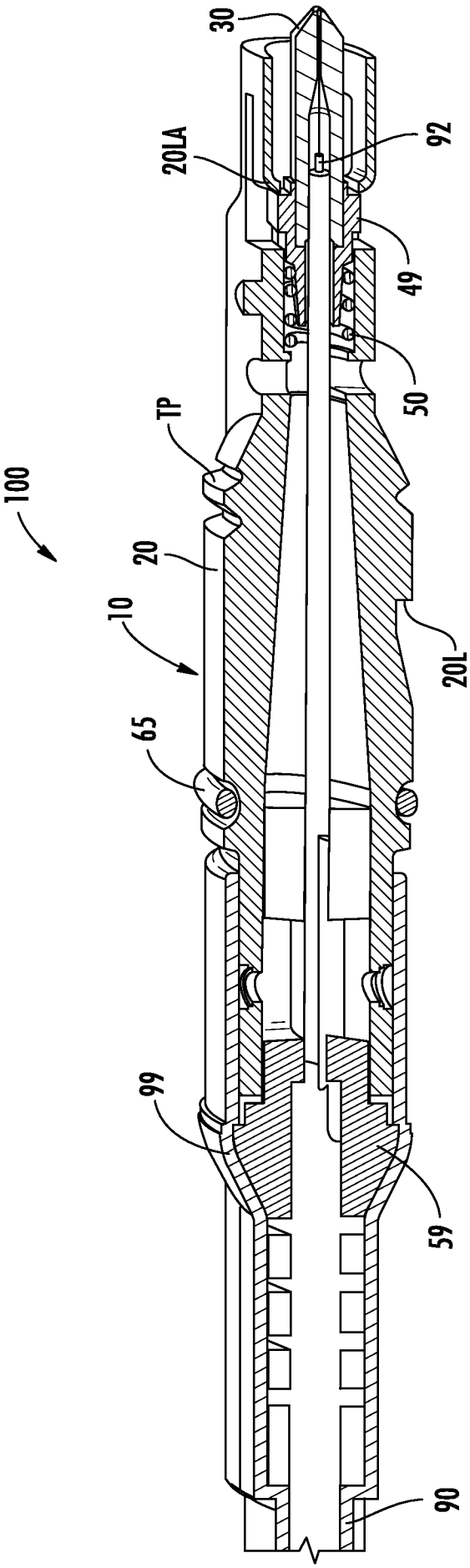

FIG. 63

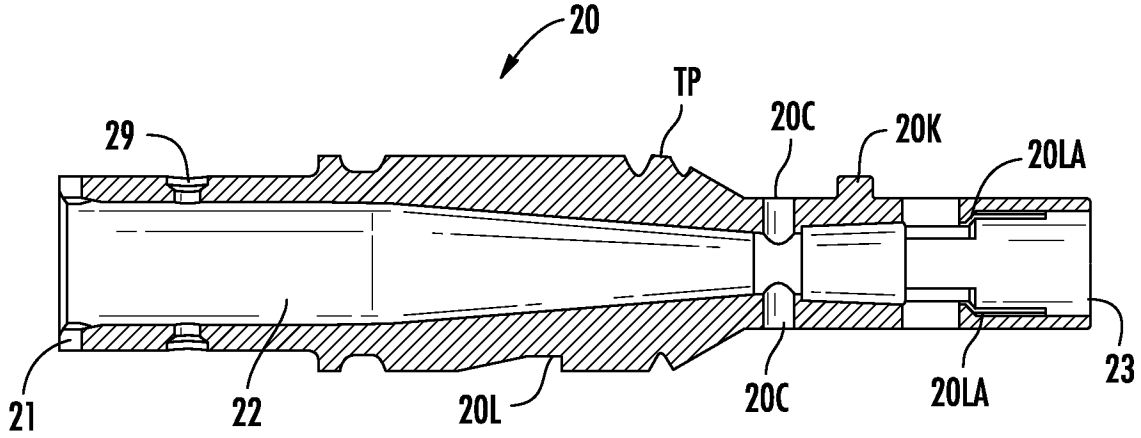
20
TP
20C
20K
20LA
29
21
22
20L
20C
20LA
23

FIG. 64

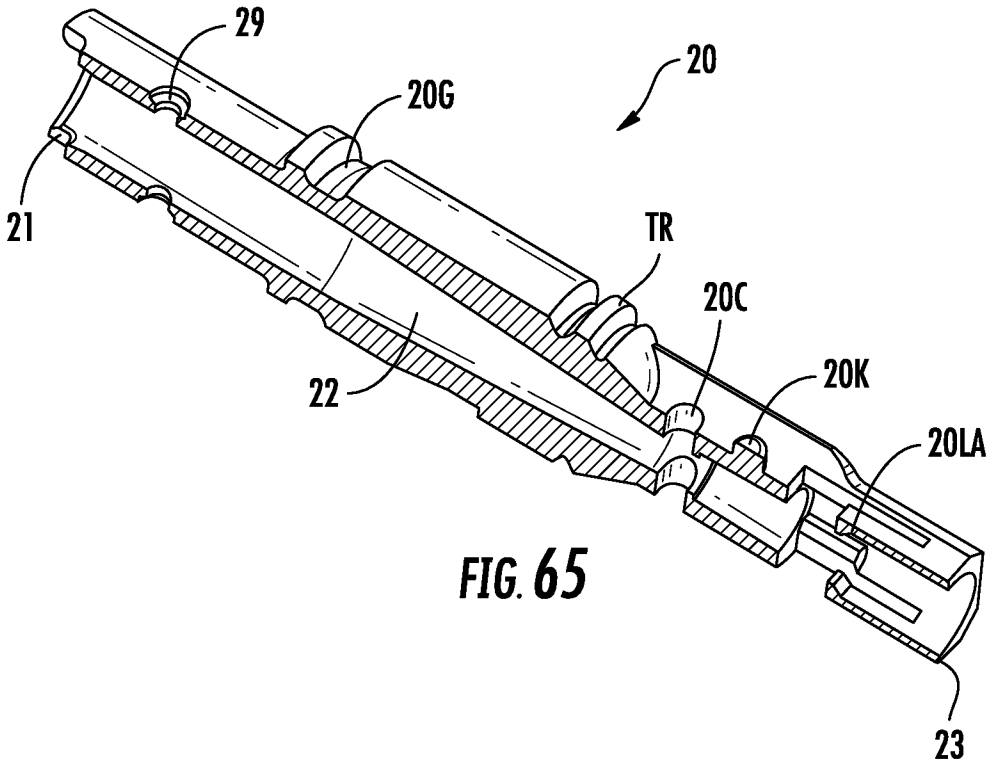
29
20G
20
21
TR
20C
20K
22
20LA
23

FIG. 65

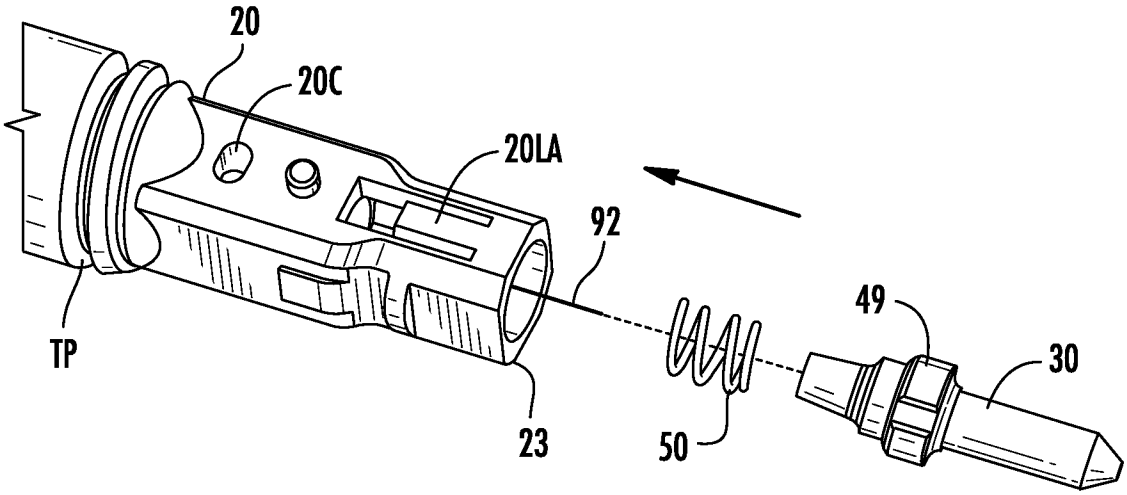
20
20C
20LA
92
49
30
TP
23
50

FIG. 66

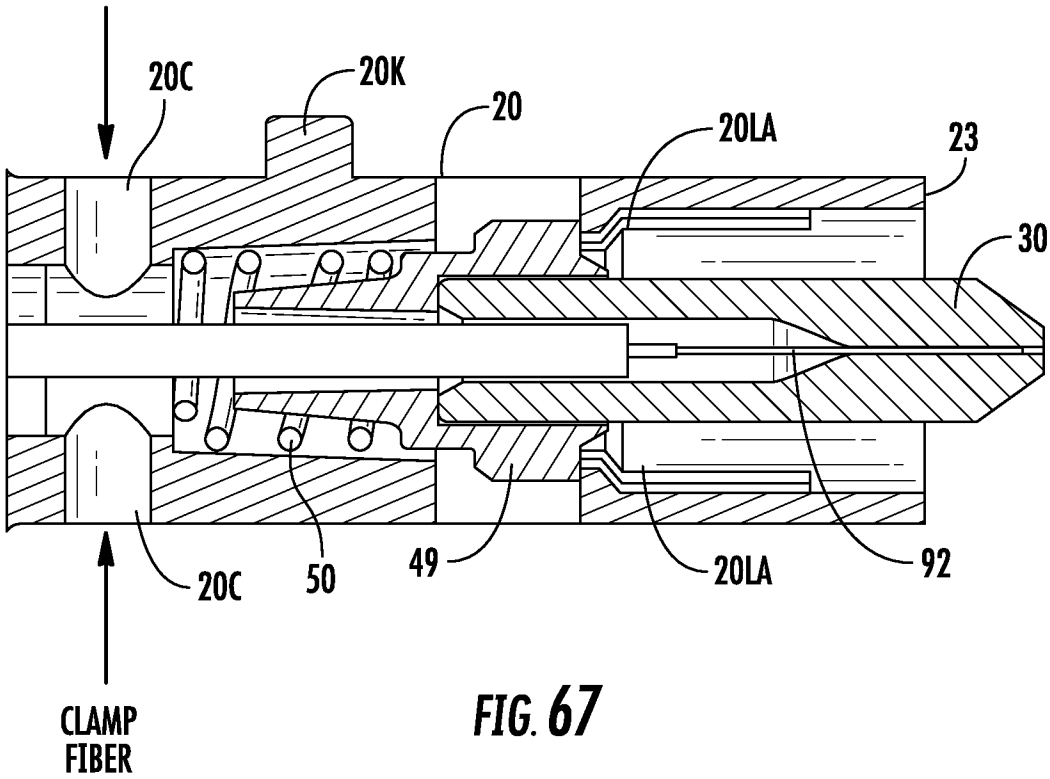
20C
20K
20
20LA
23
30
20C
50
49
20LA
92
CLAMP
FIBER

FIG. 67

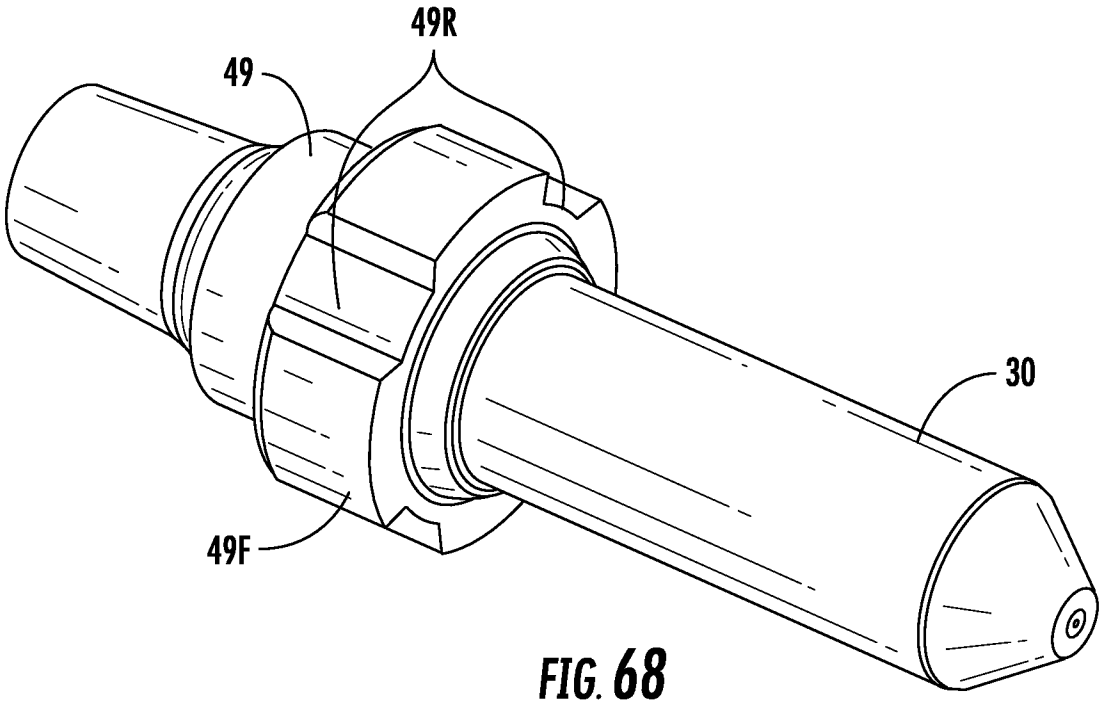

FIG. 68

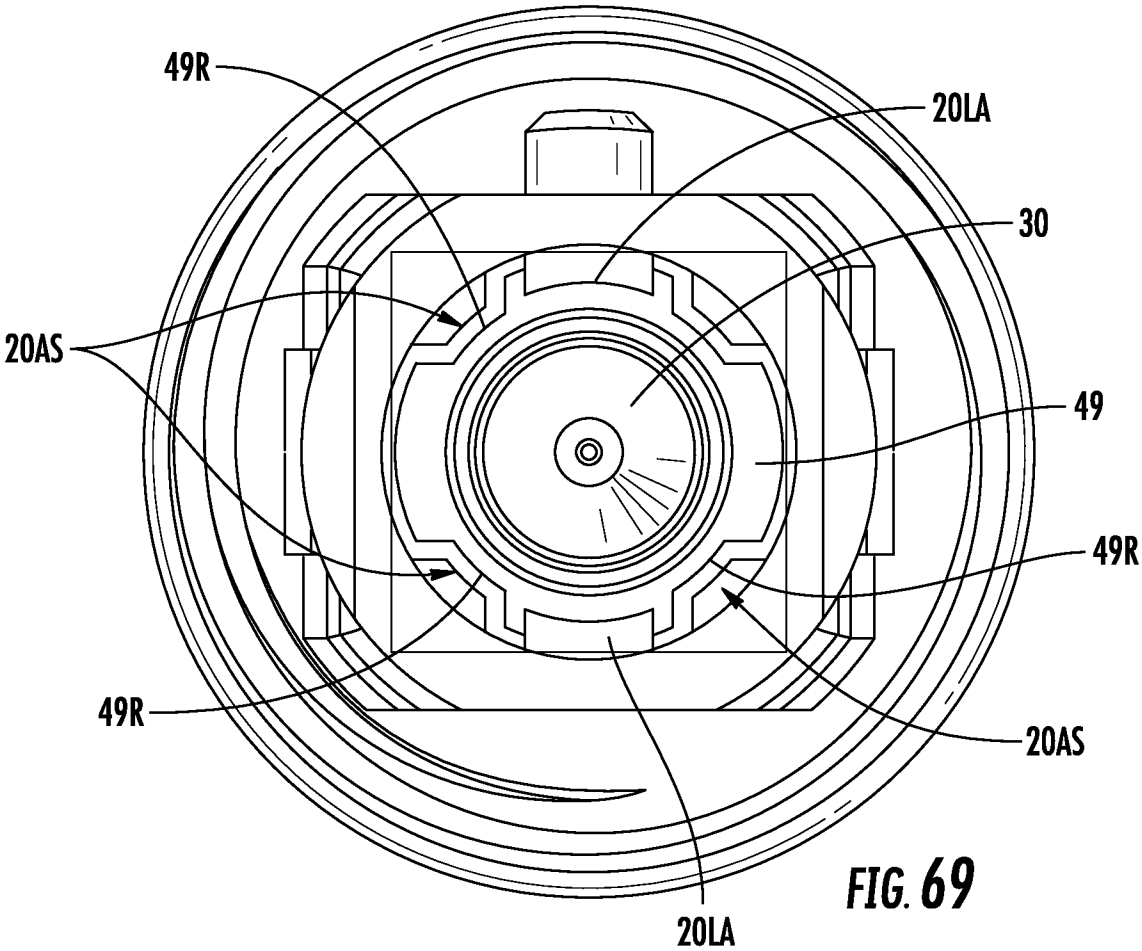

FIG. 69

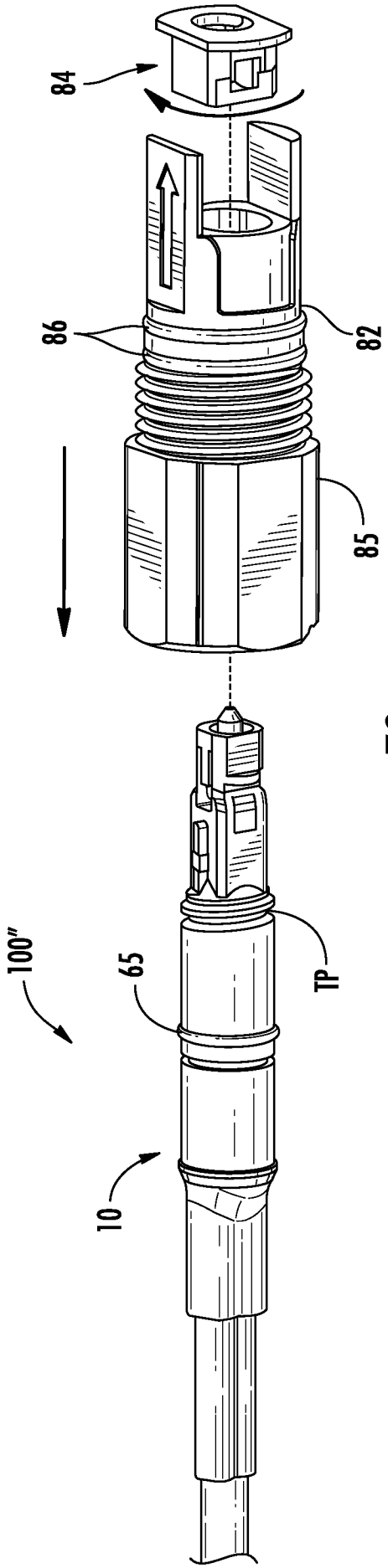

FIG. 70

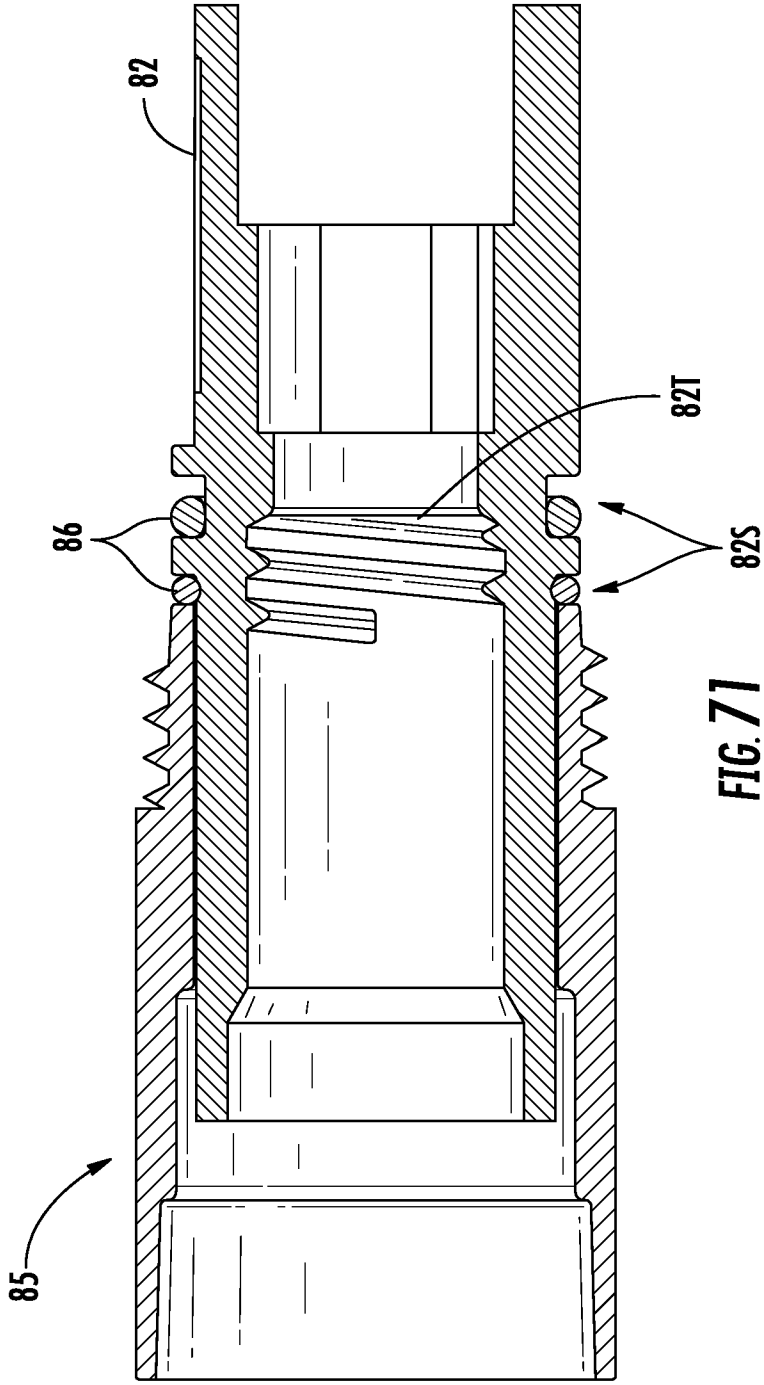

FIG. 71

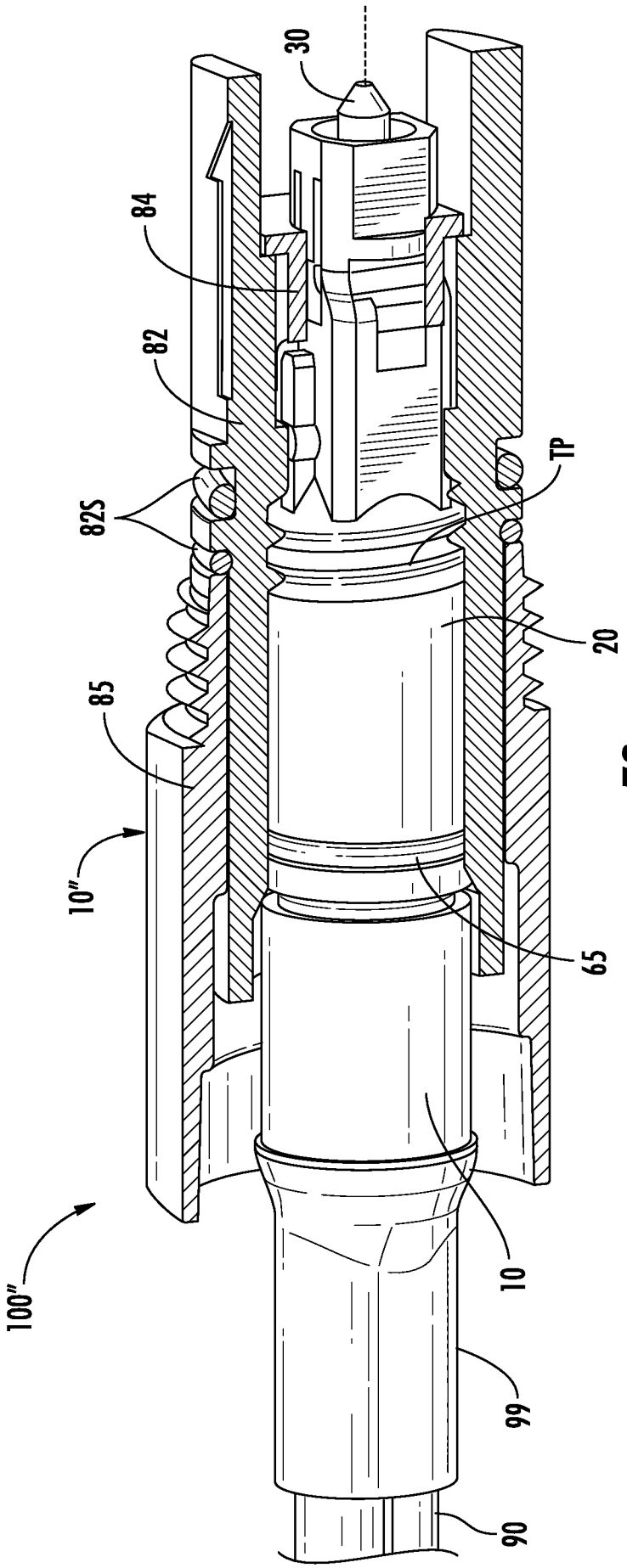

FIG. 72

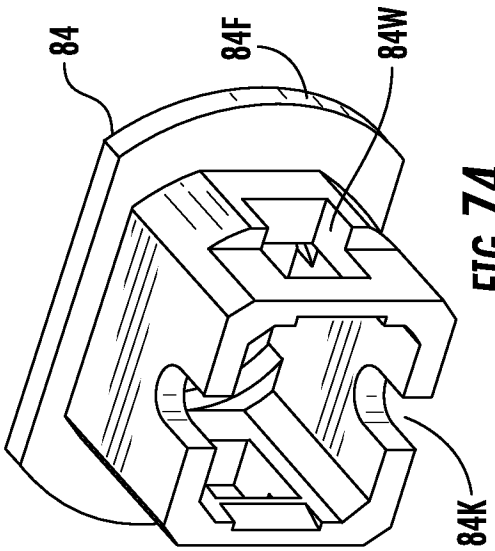

FIG. 74

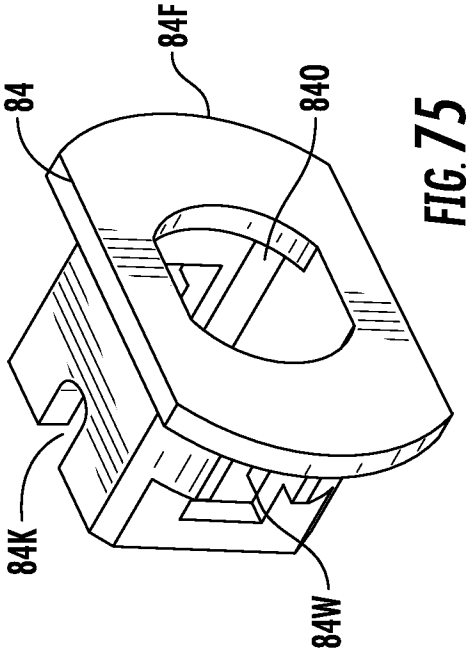

FIG. 75

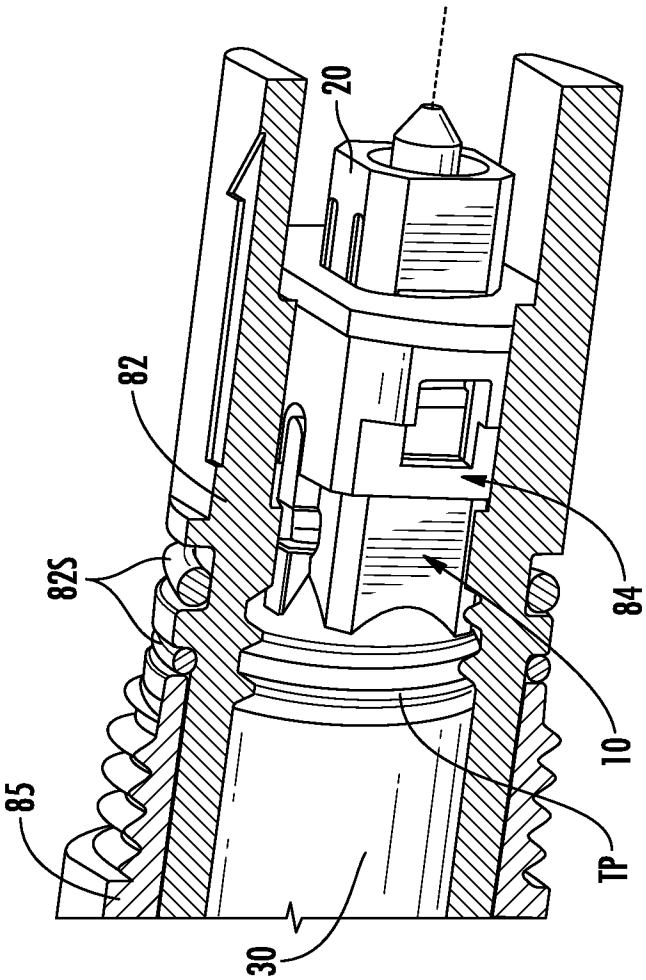

FIG. 73

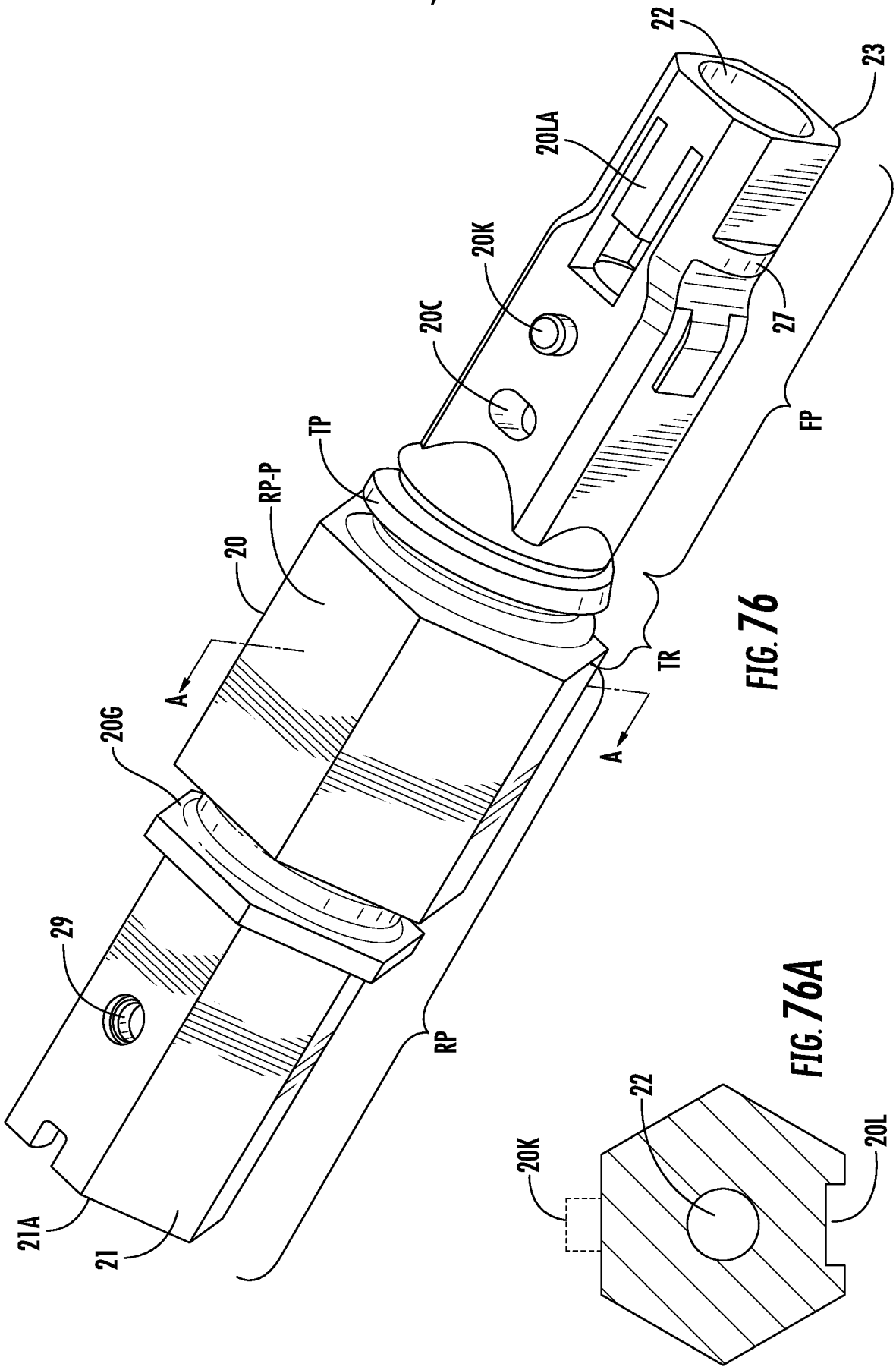

FIG. 76

FIG. 76A

INTERNATIONAL SEARCH REPORT

International application No.
PCT/US2017/063938

Box No. II Observations where certain claims were found unsearchable (Continuation of item 2 of first sheet)

This international search report has not been established in respect of certain claims under Article 17(2)(a) for the following reasons:

1. ☐ Claims Nos.:
because they relate to subject matter not required to be searched by this Authority, namely:

2. ☐ Claims Nos.:
because they relate to parts of the international application that do not comply with the prescribed requirements to such an extent that no meaningful international search can be carried out, specifically:

3. ☐ Claims Nos.:
because they are dependent claims and are not drafted in accordance with the second and third sentences of Rule 6.4(a).

Box No. III Observations where unity of invention is lacking (Continuation of item 3 of first sheet)

This International Searching Authority found multiple inventions in this international application, as follows:

see additional sheet

1. ☐ As all required additional search fees were timely paid by the applicant, this international search report covers all searchable claims.

2. ☐ As all searchable claims could be searched without effort justifying an additional fees, this Authority did not invite payment of additional fees.

3. ☐ As only some of the required additional search fees were timely paid by the applicant, this international search report covers only those claims for which fees were paid, specifically claims Nos.:

4. ☒ No required additional search fees were timely paid by the applicant. Consequently, this international search report is restricted to the invention first mentioned in the claims; it is covered by claims Nos.:

1-5, 43-47, 59-65, 71-74, 77-83, 111, 112, 114-118(completely); 28, 48, 84 94, 103(partially)

Remark on Protest

☐ The additional search fees were accompanied by the applicant's protest and, where applicable, the payment of a protest fee.

☐ The additional search fees were accompanied by the applicant's protest but the applicable protest fee was not paid within the time limit specified in the invitation.

☐ No protest accompanied the payment of additional search fees.

INTERNATIONAL SEARCH REPORT

International application No
PCT/US2017/063938

A. CLASSIFICATION OF SUBJECT MATTER
INV. G02B6/38 G02B6/44
ADD.

According to International Patent Classification (IPC) or to both national classification and IPC

B. FIELDS SEARCHED

Minimum documentation searched (classification system followed by classification symbols)
G02B H01R

Documentation searched other than minimum documentation to the extent that such documents are included in the fields searched

Electronic data base consulted during the international search (name of data base and, where practicable, search terms used)

EPO-Internal, WPI Data

C. DOCUMENTS CONSIDERED TO BE RELEVANT

Category*	Citation of document, with indication, where appropriate, of the relevant passages	Relevant to claim No.
Y	US 5 212 752 A (STEPHENSON DANIEL L [US] ET AL) 18 May 1993 (1993-05-18) column 4, line 23 - column 8, line 28 figures 1-9 -----	1-5,28, 43-48, 59-65, 71-74, 77-84, 94,103, 111,112, 114-118

-/--

[X] Further documents are listed in the continuation of Box C.

[X] See patent family annex.

* Special categories of cited documents :

"A" document defining the general state of the art which is not considered to be of particular relevance

"E" earlier application or patent but published on or after the international filing date

"L" document which may throw doubts on priority claim(s) or which is cited to establish the publication date of another citation or other special reason (as specified)

"O" document referring to an oral disclosure, use, exhibition or other means

"P" document published prior to the international filing date but later than the priority date claimed

"T" later document published after the international filing date or priority date and not in conflict with the application but cited to understand the principle or theory underlying the invention

"X" document of particular relevance; the claimed invention cannot be considered novel or cannot be considered to involve an inventive step when the document is taken alone

"Y" document of particular relevance; the claimed invention cannot be considered to involve an inventive step when the document is combined with one or more other such documents, such combination being obvious to a person skilled in the art

"&" document member of the same patent family

Date of the actual completion of the international search	Date of mailing of the international search report
8 March 2018	14/05/2018

Name and mailing address of the ISA/	Authorized officer
European Patent Office, P.B. 5818 Patentlaan 2 NL - 2280 HV Rijswijk Tel. (+31-70) 340-2040, Fax: (+31-70) 340-3016	Szachowicz, Marta

3

Form PCT/ISA/210 (second sheet) (April 2005)

INTERNATIONAL SEARCH REPORT

International application No
PCT/US2017/063938

C(Continuation). DOCUMENTS CONSIDERED TO BE RELEVANT

Category*	Citation of document, with indication, where appropriate, of the relevant passages	Relevant to claim No.
Y	US 2016/209599 A1 (VAN BAELEN DAVID JAN IRMA [BE] ET AL) 21 July 2016 (2016-07-21)	1-5, 43-47, 59-65, 71-74, 77-83, 111,112, 114-118
A	paragraph [0041] - paragraph [0045] figures 1,2	28,48, 84,94, 103

Y	WO 2016/095213 A1 (TYCO ELECTRONICS SHANGHAI CO [CN]; TYCO ELECTRONICS RAYCHEM BVBA [BE];) 23 June 2016 (2016-06-23)	1-5, 43-47, 59-65, 71-74, 77-83, 111,112, 114-118
A	page 10, line 22 - line 32 page 19, line 8 - page 26, line 10 figures 12-22	28,48, 84,94, 103

Y	US 2012/252244 A1 (ELKINS II ROBERT BRUCE [US] ET AL) 4 October 2012 (2012-10-04)	1-5,28, 43-48, 59-65, 71-74, 77-84, 94,103, 111,112, 114-118
	paragraph [0007] - paragraph [0030] figures 1-8	

A	US 2005/281510 A1 (VO CHANH C [US] ET AL) 22 December 2005 (2005-12-22)	1-5,28, 43-48, 59-65, 71-74, 77-84, 94,103, 111,112, 114-118
	the whole document	

3

Form PCT/ISA/210 (continuation of second sheet) (April 2005)

INTERNATIONAL SEARCH REPORT

Information on patent family members

International application No
PCT/US2017/063938

Patent document cited in search report	Publication date	Patent family member(s)	Publication date
US 5212752 A	18-05-1993	AU 643915 B1	25-11-1993
		CA 2096058 A1	28-11-1993
		DE 69324404 D1	20-05-1999
		DE 69324404 T2	02-09-1999
		DK 0572174 T3	25-10-1999
		EP 0572174 A2	01-12-1993
		JP 2837608 B2	16-12-1998
		JP H0651165 A	25-02-1994
		JP H1152186 A	26-02-1999
		NO 931908 A	29-11-1993
		NZ 247693 A	27-02-1996
		TW 222688 B	21-04-1994
		US RE37079 E	06-03-2001
		US RE37080 E	06-03-2001
		US 5212752 A	18-05-1993
US 2016209599 A1	21-07-2016	CN 105683795 A	15-06-2016
		EP 3036573 A1	29-06-2016
		US 2016209599 A1	21-07-2016
		US 2018031774 A1	01-02-2018
		WO 2015028433 A1	05-03-2015
WO 2016095213 A1	23-06-2016	EP 3234672 A1	25-10-2017
		US 2017343741 A1	30-11-2017
		WO 2016095213 A1	23-06-2016
US 2012252244 A1	04-10-2012	US 2012252244 A1	04-10-2012
		WO 2011049697 A1	28-04-2011
US 2005281510 A1	22-12-2005	AU 2005264859 A1	26-01-2006
		CA 2572567 A1	26-01-2006
		CN 1985205 A	20-06-2007
		EP 1759231 A1	07-03-2007
		US 2005281510 A1	22-12-2005
		WO 2006009597 A1	26-01-2006

FURTHER INFORMATION CONTINUED FROM PCT/ISA/ 210

This International Searching Authority found multiple (groups of) inventions in this international application, as follows:

1. claims: 1-5, 43-47, 59-65, 71-74, 77-83, 111, 112, 114-118(completely); 28, 48, 84, 94, 103(partially)

   A fiber optic connector comprising a housing having a particular footprint with a threaded transition region and a conversion housing for changing a fiber optic connector from a first connector footprint to a second connector footprint

   ---

2. claims: 6-27, 29-42, 49-58, 67-70, 76, 85-93, 95-100, 104-108, 113(completely); 28, 48, 84, 94, 103(partially)

   A ferrule sub-assembly of a fiber optic connector comprising a ferrule holder and a ferrule.

   ---

3. claims: 66, 75, 101, 102, 109, 110

   A fiber optic connector comprising a housing and a cable adapter.