(No Model.)

T. B. FERGUSON, Jr.

PICKET FENCE WIRING MACHINE.

No. 590,701. Patented Sept. 28, 1897.

Fig. 1.

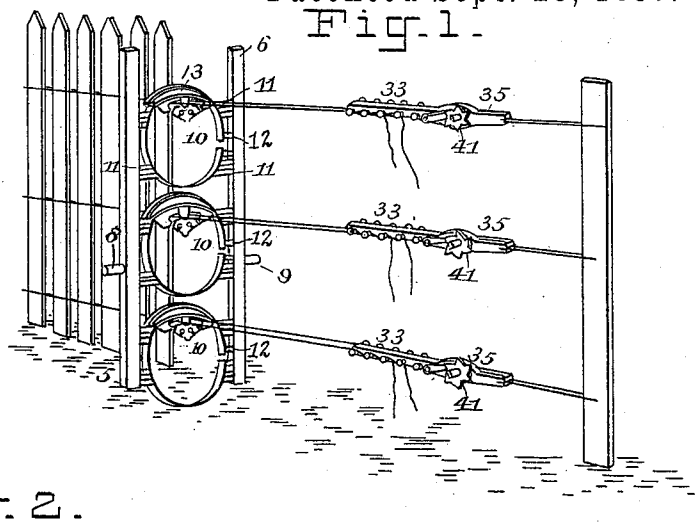

Fig. 3.

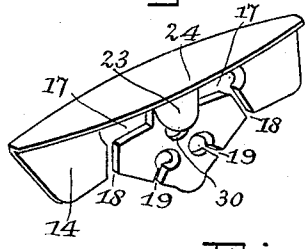

Fig. 2.

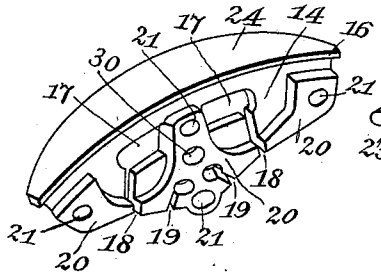

Fig. 4.

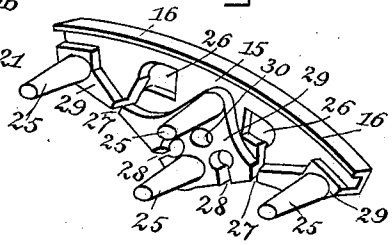

Fig. 5.

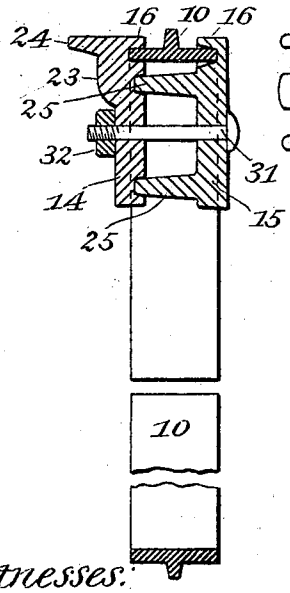

Fig. 6.

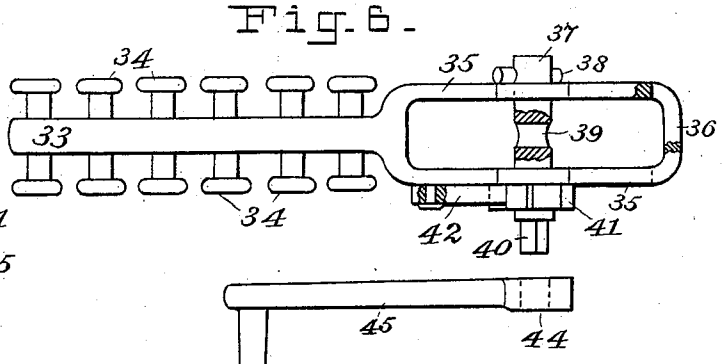

Fig. 7.

Witnesses:
E. R. Bolton
W. F. Hammel.

Inventor:
Thomas B. Ferguson Jr.
By James R. Rogers
his Attorney.

THE NORRIS PETERS CO., PHOTO-LITHO., WASHINGTON, D. C.

UNITED STATES PATENT OFFICE.

THOMAS B. FERGUSON, JR., OF NEW YORK, N. Y.

PICKET-FENCE-WIRING MACHINE.

SPECIFICATION forming part of Letters Patent No. 590,701, dated September 28, 1897.

Application filed January 14, 1897. Serial No. 619,179. (No model.)

To all whom it may concern:

Be it known that I, THOMAS B. FERGUSON, Jr., a citizen of the United States, residing at New York, in the county of New York and State of New York, have invented certain new and useful Improvements in Picket-Fence-Wiring Machines; and I do hereby declare the following to be a full, clear, and exact description of the invention, such as will enable others skilled in the art to which it appertains to make and use the same.

This invention relates to improvements in picket-fence-wiring machines designed particularly for manual operation in which a plurality of guide-rings supported between parallel uprights or handle-bars and carrying circularly-moving twister-heads are employed, together with a wire-tightener of an improved construction, and constitutes certain improvements upon the construction disclosed in the patent granted to me January 14, 1896, No. 553,188, for a machine for wiring fence-pickets.

The main objects of this invention are to provide a machine of this character in which the knocker on the front of the twisting-head extends from one end to the other thereof and is segmental upon its outer surface, thereby affording a convex surface to come in contact with the pickets and prevent them from engaging upon the corners of the knocker, thus preventing the free circular movement of the twister-heads around the guide-rings, and to employ the fourth stud near the upper edge of the twister-head to keep the heads parallel and prevent the heads from binding on the edge of the guide-rings; also, to form the additional diverging slots in the lower edge of the twister-heads, adapted to be used when wire pickets are employed instead of the thick wooden pickets ordinarily used, and to form a reinforcing-rib on the front face of the twister-head which is provided with the knocker, designed to afford additional strength to this part, together with reinforced portions on the inner surfaces of said twisting-heads to secure greater strength throughout the same.

The further objects of this invention are to provide a simple and effective wire-tightener having a row of laterally-projecting knobs upon each side thereof and having a transverse slot formed in the yoke end thereof through which the wire passes, also providing a transverse shaft which is mounted in the yoke end of the wire-tightener, adapted to receive the wire which passes through said transverse slot, said shaft being provided with a central opening to receive the end of the wire and secure the same in order that the wire may be wound upon the shaft.

With these and other objects in view the invention consists in the construction, combination, and arrangement of parts hereinafter more fully described in the specification and illustrated in the accompanying drawings, in which—

Figure 1 illustrates my invention in operative position during the construction of a picket fence. Fig. 2 is a perspective view of one member of the twister-heads, showing the slots and reinforced portions thereof. Fig. 3 is a view of the opposite side or face of the same. Fig. 4 is a similar view of the other member of the twister-head. Fig. 5 is a vertical section of the twister-head and guide-ring. Fig. 6 is a plan view of the wire-tightener, partly broken away; and Fig. 7 is a detail view of the crank-handle.

Similar characters of reference designate like parts throughout the several views.

In carrying my invention into practice I preferably employ two uprights or handle-bars 5 and 6, provided at predetermined points with handles 8 and 9 to be grasped by the operators to facilitate the manipulation of the machine during the process of constructing a fence therewith, and between these uprights 5 and 6 I secure three guide-rings 10 by means of arms 11, projecting laterally from said rings, but it is obvious that a larger or smaller number of rings may be employed, and I therefore do not confine myself to any particular number of the guide-rings. By dividing these guide-rings at one side an entrance is offered for the wire, and secured to or formed on the guide-rings at each side of the entrance or opening therein are extensions or lugs 12, adapted to act as guides for the wire when passing through the entrance or opening in the guide-rings 10 and also to bear against the upright 6 and thereby maintain all of the guide-rings in the same vertical plane.

Movably mounted on the guide-rings 10 are the twister-heads 13, which are composed of two members or parts 14 and 15, each having a curved inwardly-directed flange 16, adapted to project over the outer edges of the guide-ring and maintain the twister-heads in position thereon, yet leaving them free to move around the guide-rings to twist the wire.

The member 14 of the twister-head has formed therein oblong longitudinal slots 17, with which communicate, near the lower outer portion thereof, outwardly-directed slots 18, and formed in the lower central portion of the member 14 are other outwardly-directed slots 19, which terminate in circular enlargements or openings, and these latter slots are designed particularly for use to guide or hold the wire when a fence is being constructed of wire pickets. The portions of said member 14 of the twister-head between the slots are reinforced or strengthened, as shown at 20, Fig. 2, and these reinforced portions are designed to increase the strength of the portions of the member between the slots and diminish the likelihood of breaking at these points when subjected to the strain of the wire in the construction of a fence.

At predetermined points in the reinforced or strengthened portions 20 are formed depressions or sockets 21, or these sockets may be formed in other parts of the member 14, if desired, and there is also formed therein an opening 30 to receive a connecting-bolt which holds the members 14 and 15 of the twister-head together, and upon the other side or surface of the member 14 is formed a reinforcing-rib 23, extending transversely thereof and designed to give additional strength thereto, and above the rib 23 and projecting laterally from the upper edge of the member is a segmental flange 24, extending from one end of the member to the other, and by forming this flange in this manner no projections or points are produced to engage the pickets and prevent the movement of the twister-heads around the guide-rings, and this construction constitutes another of the objects of this invention.

The member 15 of the twister-head is similar in construction to the member 14, before described, with the exception that in the place of the sockets 21 of the member 14 studs or projections 25 are secured thereto or formed thereon at predetermined points, and they are adapted to register with the sockets 21 in the member 14, and it will be also observed that in this invention an upper central stud is employed adapted to keep the upper portions of the twister-heads from impinging against the edges of the guide-ring and thereby impeding the free movement of the twister-heads around the guide-ring.

In the member 15 are formed the oblong slots 26, with which communicate the outwardly-directed slots 27, and in the lower central portion thereof are formed the outwardly-directed slots 28, as before described, and between these slots are the reinforcing or strengthening portions 29, from which preferably project the studs 25, before mentioned, and these members 14 and 15 are removably connected together by means of a bolt 31, which passes through the openings 30 in said members and is secured in position by means of a nut 32, as clearly shown in Fig. 5.

The wire-tightener shown in Fig. 6 consists of a shank 33, from each side of which projects a row of knobs or headed projections 34, and these knobs are designed to receive the strands of wire and retain the same in the proper position during the construction of the fence, and connected with or formed on one end of said shank 33 is a yoke 35, the free end of which is provided with a slot 36, through which the anchor-wire passes, and mounted midway of the yoke 35 is a transverse shaft 37, having a central opening 39 formed therein, adapted to receive the ends of the wire which passes through the slot 36 and to hold the ends while the wire is wound upon the shaft 37, and this also is another object of this invention.

Mounted rigidly upon the shaft 37 is a ratchet-wheel 41, and the opposite end of the shaft is retained in position by means of a split key 38, and the end of said shaft 37 adjacent to the ratchet-wheel 41 is square in cross-section and adapted to enter an opening 44 in the crank 45, by means of which the shaft 37 may be rotated, and to prevent the reverse movement of said shaft I provide a pawl 42, which is pivoted to the yoke 35 adjacent to the ratchet-wheel.

The operation of the machine will be readily understood from the foregoing description when taken in connection with the accompanying drawings and the following description thereof.

The anchor-wire is passed through holes in the end post, then through the slot 36 in the end of the yoke 35 of the wire-tightener, after which the ends of the wire are passed through the opening 39 in the shaft 37, which upon being revolved by the crank 45 while the wire is thereon, and the main wires being suitably connected with the first post and having the extremities of said wires attached to the knobs 34 of the wire-tightener the main wires can always be kept tight during the process of constructing the fence, as clearly shown in Fig. 1 of the drawings, and by placing the upright in the position shown in said figure and engaging the wires into the oblong slots of the twister-heads the wire can be twisted after each picket has been inserted by moving said upright outwardly, upwardly, inwardly, and downwardly, or about the twister-head as a pivot, one-half a revolution and back again.

Various changes in and modifications of the construction of the invention herein shown and described may be made without departing from the spirit and scope of the invention, and I reserve the right to make

the same when carrying this invention into practice.

Having fully described my invention, what I claim as new, and desire to secure by Letters Patent, is—

1. A picket-fence-wiring machine consisting of uprights or handle-bars, guide-rings secured between the handle-bars, twister-heads movably mounted on said guide-rings and composed of two detachably-connected members provided with slots having outwardly-directed outlets, and additional slots in the lower central portion thereof.

2. A picket-fence-wiring machine consisting of uprights or handle-bars, guide-rings secured between the handle-bars, twister-heads movably mounted on said guide-rings and composed of two detachably-connected members provided with slots having outwardly-directed outlets, and additional slots in the lower central portion thereof, said members having reinforced portions on their inner faces to strengthen the same.

3. A picket-fence-wiring machine consisting of uprights or handle-bars, guide-rings secured between the handle-bars, twister-heads movably mounted on said guide-rings and composed of two detachably-connected members provided with slots having outwardly-directed outlets, and additional slots in the lower portion thereof, said members having reinforced portions on their inner faces to strengthen the same, one of said members having a segmental flange extending from one end thereof to the other, to be used as a knocker for the picket.

4. A picket-fence-wiring machine consisting of uprights or handle-bars, guide-rings secured between the handle-bars, twister-heads movably mounted on said guide-rings and composed of two detachably-connected members provided with slots having outwardly-directed outlets, and additional slots in the lower central portion thereof, said members having reinforced portions on their inner faces to strengthen the same, one of said members having a segmental flange extending from one end thereof to the other, and a vertical reinforcing-rib on the outer face of said member below said flange.

5. A picket-fence-wiring machine consisting of uprights or handle-bars, guide-rings secured between the handle-bars, twister-heads movably mounted on said guide-rings and composed of two detachably-connected members provided with slots having outwardly-directed outlets, and additional slots in the lower central portion thereof, said members having reinforced portions on their inner faces to strengthen the same, one of said members having a segmental flange extending from one end thereof to the other, and a vertical reinforcing-rib on the outer face of said member below said flange, together with a central upper stud on the other member to prevent the upper portion of the members from impinging against the edges of the guide-ring.

6. A wire-tightener of the character described, consisting of a shank from each side of which extends a row of headed projections or knobs adapted to spread the wire, the opposite end of said shank being bifurcated or yoke-shaped and having formed in the extremity thereof a transverse slot for the introduction of the anchor-wire, said slot extending the entire width of the extremity or end, means for tightening the anchor-wire, and means for retaining it in a tightened condition.

In testimony whereof I affix my signature in presence of two witnesses.

THOMAS B. FERGUSON, JR.

Witnesses:

CAL KROME,

GEO. H. RUSSELL.