United States Patent [19]

Bashark

[11] **Patent Number: 5,038,091**

[45] **Date of Patent: Aug. 6, 1991**

[54] **ELECTRONIC CONTROL FOR AN APPLIANCE**

[75] Inventor: **Larry T. Bashark**, St. Joseph Township, Berrien County, Mich.

[73] Assignee: **Whirlpool Corporation**, Benton Harbor, Mich.

[21] Appl. No.: **397,755**

[22] Filed: **Aug. 23, 1989**

Related U.S. Application Data

[63] Continuation-in-part of Ser. No. 392,473, Aug. 11, 1989, and Ser. No. 392,368, Aug. 11, 1989.

[51] **Int. Cl.**[5] **B30B 15/22**; H07P 1/40

[52] **U.S. Cl.** ..... **318/809**; 318/727; 318/817; 318/799; 318/280; 318/751; 100/229 A

[58] **Field of Search** ..... 318/257, 817, 951, 455, 318/785, 795, 786, 722, 729, 775, 778, 779, 796, 806, 809, 812, 822, 798, 280, 727, 681, 430, 799, 434–438; 68/12 R, 133, 134; 100/229 A

[56] **References Cited**

U.S. PATENT DOCUMENTS

3,337,756	8/1967	Mendenhall	307/141.4
3,918,359	11/1975	Hennells et al.	100/229 A
4,379,986	4/1983	Baxter et al.	318/434
4,436,030	3/1984	Ciciora	100/229 A
4,481,786	11/1984	Bashark	62/160
4,555,654	11/1985	Spradling et al.	318/817
4,781,111	11/1988	Chesnut	100/229 A
4,804,911	2/1989	Pertessis et al.	318/786
4,809,600	3/1989	Yamamoto et al.	100/229 A

Primary Examiner—William M. Shoop, Jr.
Assistant Examiner—John W. Cabeca
Attorney, Agent, or Firm—Stephen D. Krefman; Thomas J. Roth; Thomas E. Turcotte

[57] **ABSTRACT**

An electronic control for a motor which eliminates the motor centrifugal switch and more particularly a control for a domestic refuse compactor which permits the user to control the approximate full trash bag weight and obtain more compaction from a split phase induction drive motor. A ferrite core sensor on the main winding of the drive motor samples the lagging phase angle of the motor main winding current during a compaction stroke. A low force cycle is achieved by terminating the stroke as soon as phase samples fall below a threshold defined at the start of each cycle by a locked motor main winding phase sample acquired prior to starting the motor. A medium force cycle terminates the stroke when compaction forces exceed the main winding breakdown torque. A high force cycle is achieved by re-activating a motor start winding when compaction forces exceed the main winding breakdown torque and terminating the stroke as soon as the phase samples exceed a threshold defined at the start of each cycle during motor starting. The control uses programmed referencing techniques to eliminate factory pre-calibration.

79 Claims, 17 Drawing Sheets

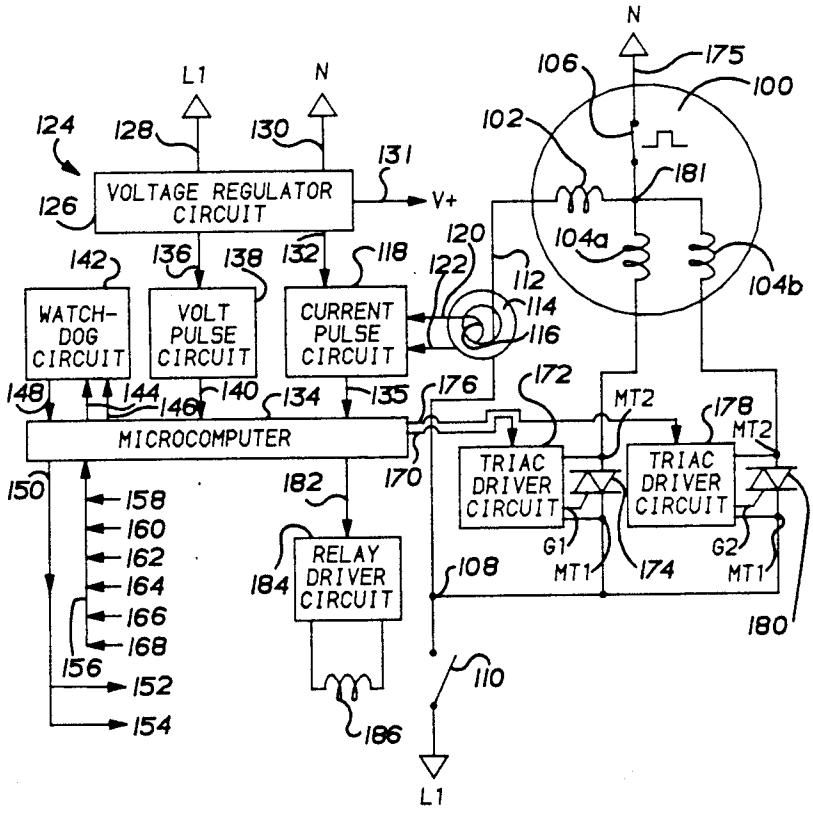

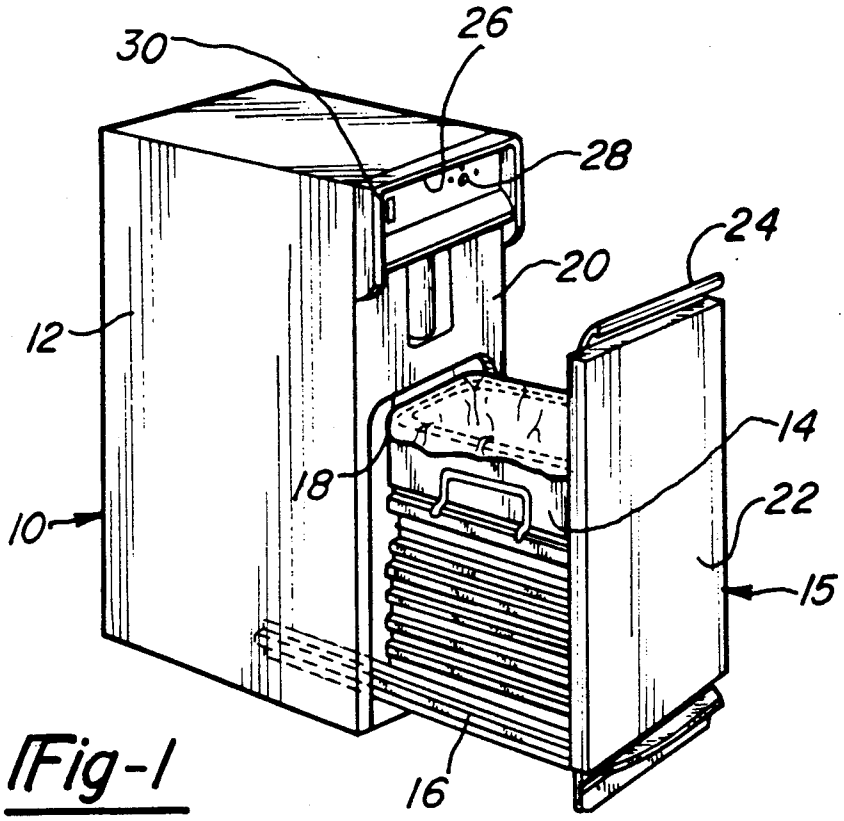
30
26
28
24
20
12
14
18
22
10
15
16

Fig-1

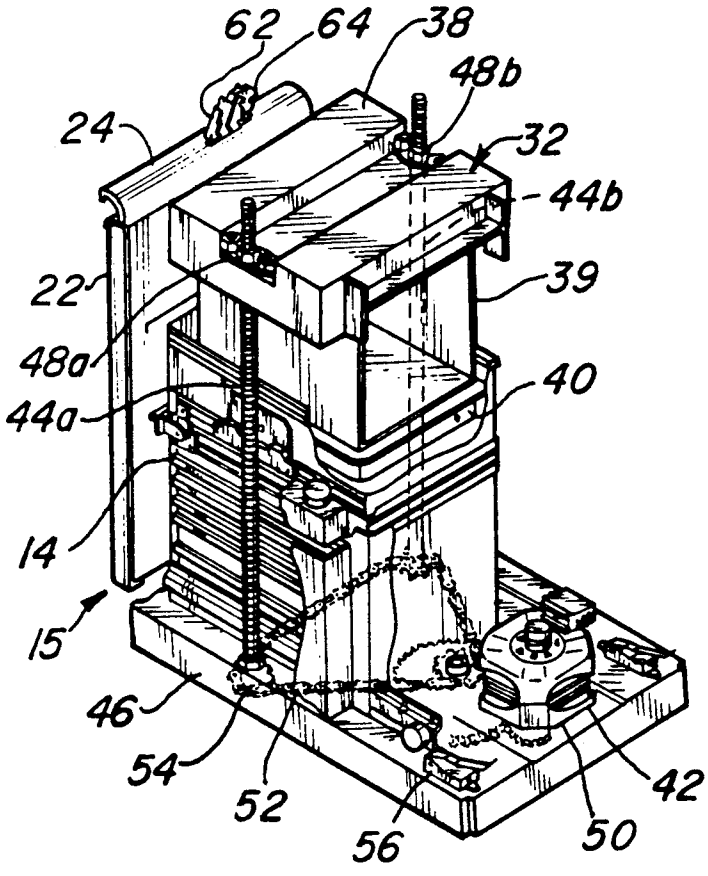
62
64
38
48b
24
32
44b
39
22
48a
40
44a
14
15
46
54
52
56
50
42

Fig-2

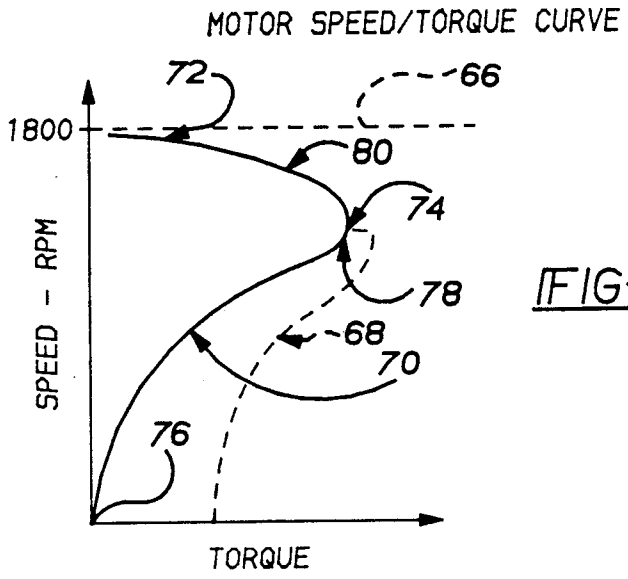
MOTOR SPEED/TORQUE CURVE
72
66
1800
80
74
78
68
70
76
SPEED - RPM
TORQUE

FIG-3

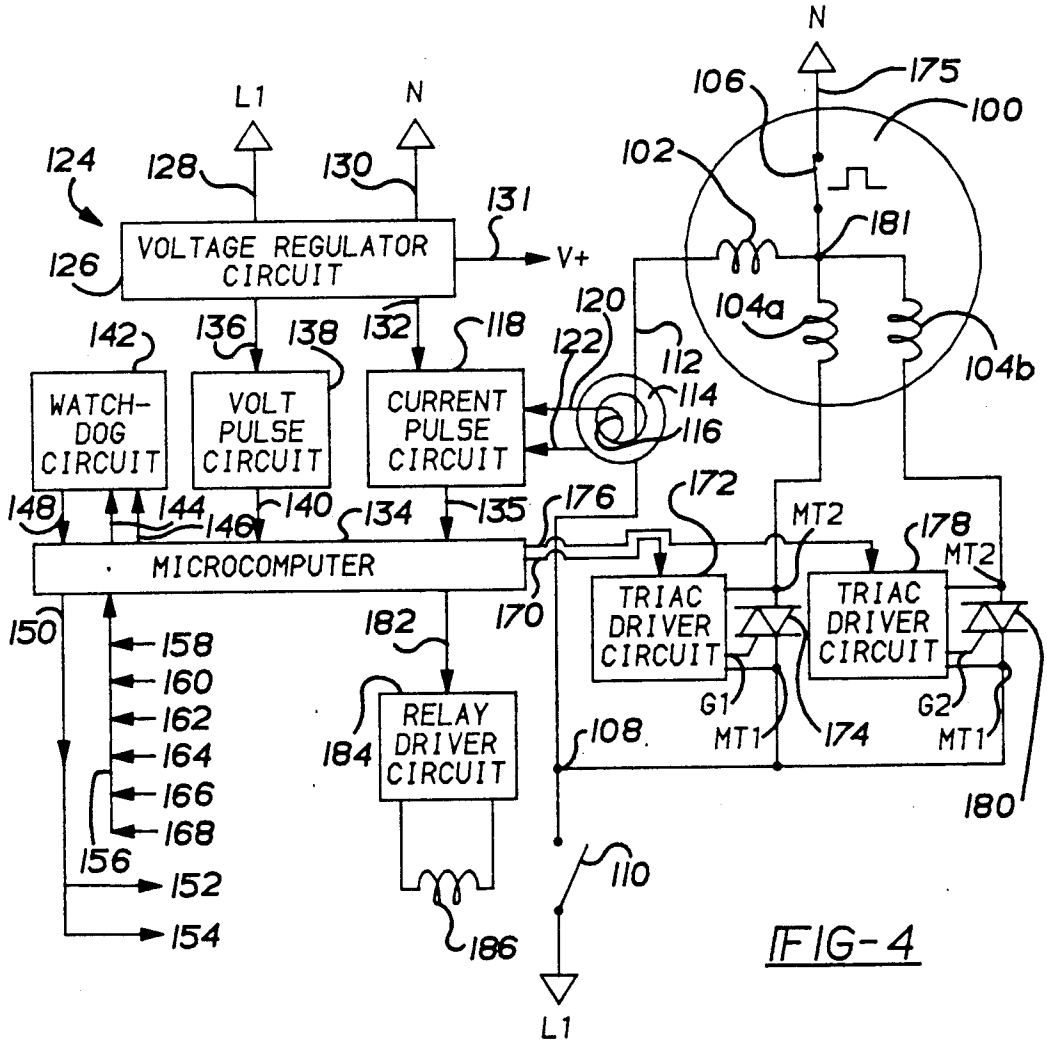
N
L1
N
106
175
100
124
128
130
102
131
181
126
VOLTAGE REGULATOR CIRCUIT
V+
120
104a
142
136
138
132
118
122
112
104b
114
WATCH-DOG CIRCUIT
VOLT PULSE CIRCUIT
CURRENT PULSE CIRCUIT
116
148
144
146
140
134
135
176
172
MT2
178
MT2
MICROCOMPUTER
TRIAC DRIVER CIRCUIT
TRIAC DRIVER CIRCUIT
150
182
170
158
160
162
164
166
168
156
152
154
RELAY DRIVER CIRCUIT
184
108
G1
MT1
174
G2
MT1
180
110
186
L1

FIG-4

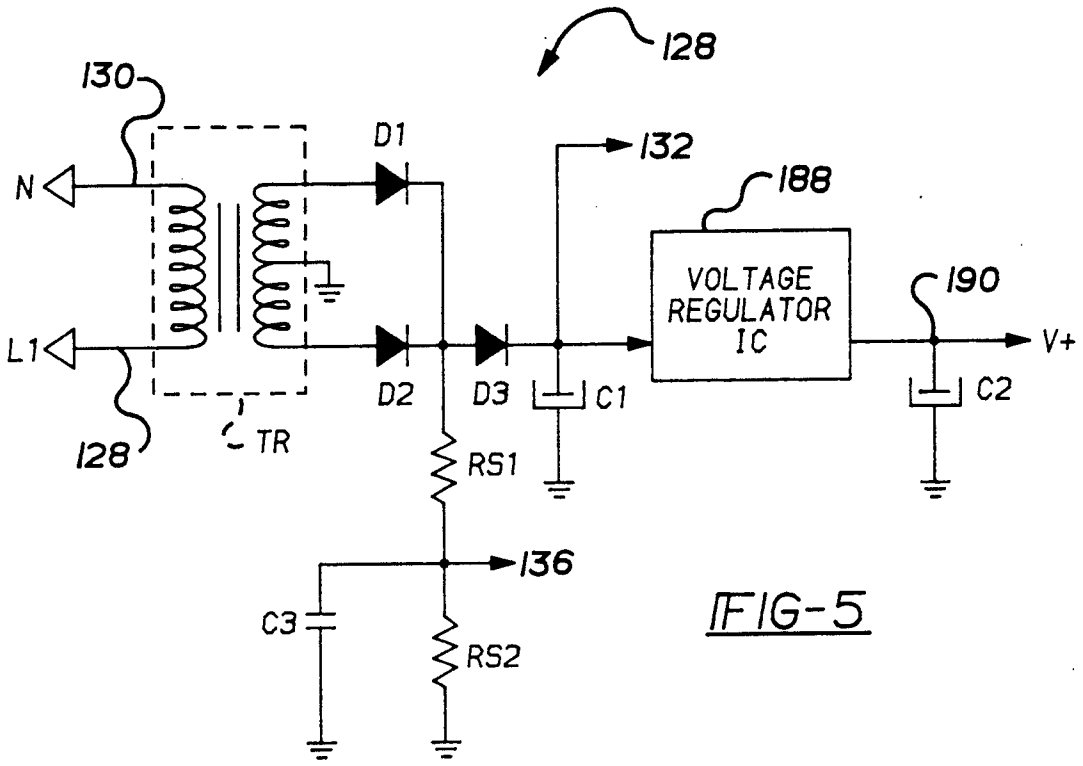
128
130
D1
132
188
N
VOLTAGE
REGULATOR
IC
190
L1
D2
D3
C1
C2
V+
128
TR
RS1
136
C3
RS2

FIG-5

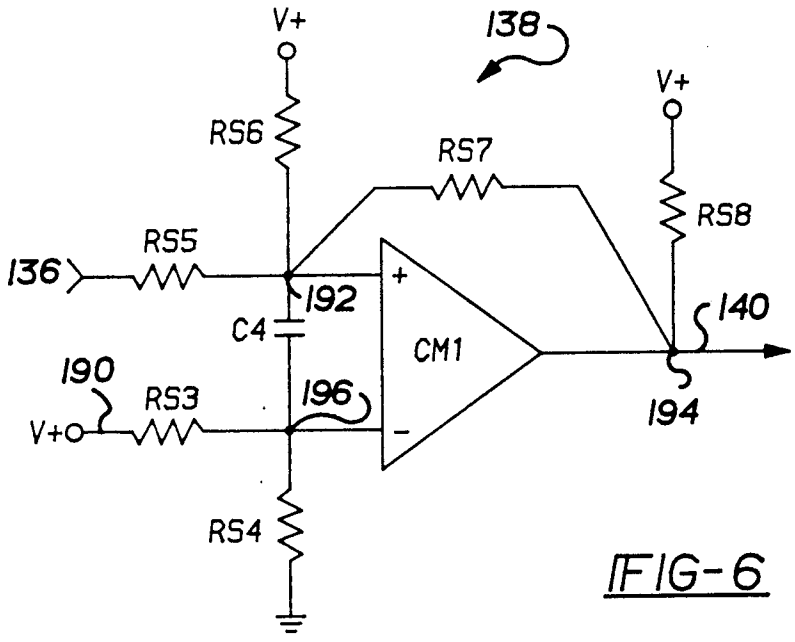
V+
138
V+
RS6
RS7
RS8
RS5
136
192
+
140
C4
CM1
190
RS3
196
V+
194
-
RS4

FIG-6

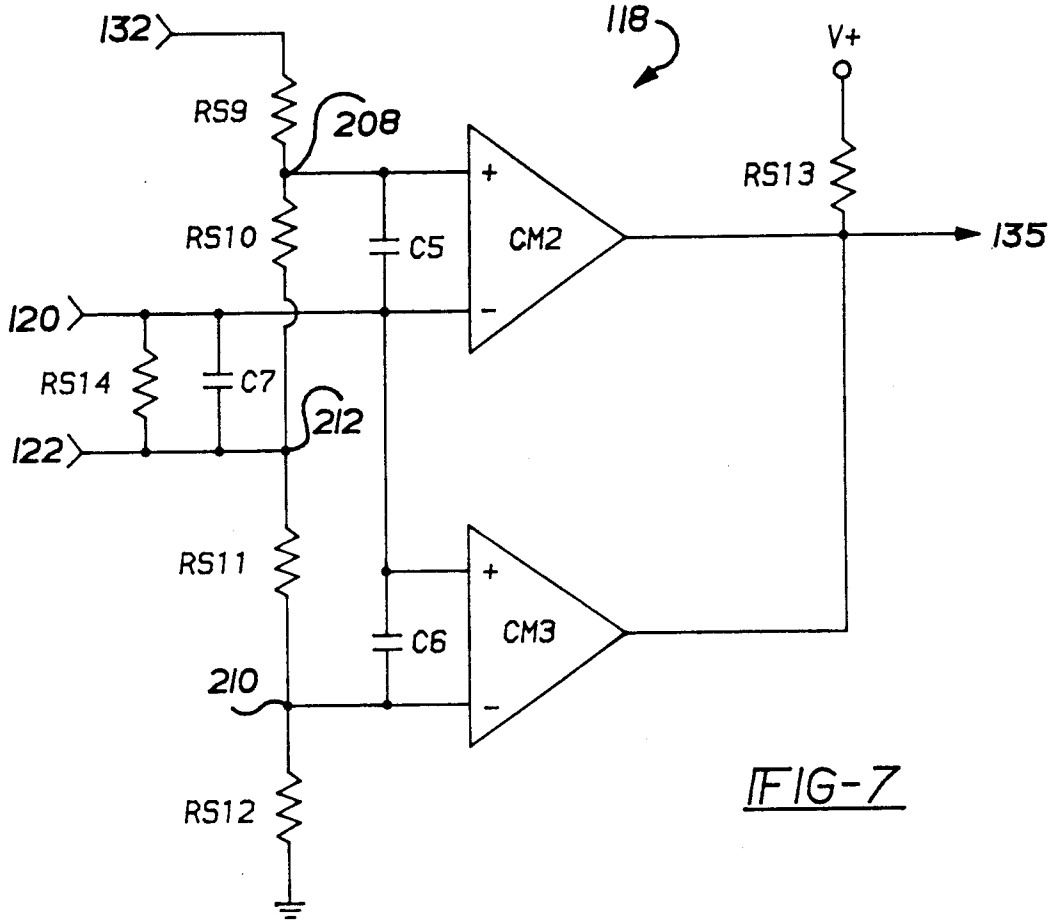
132
RS9
208
RS10
C5
CM2
118
V+
RS13
135
120
RS14
C7
212
122
RS11
C6
CM3
210
RS12

FIG-7

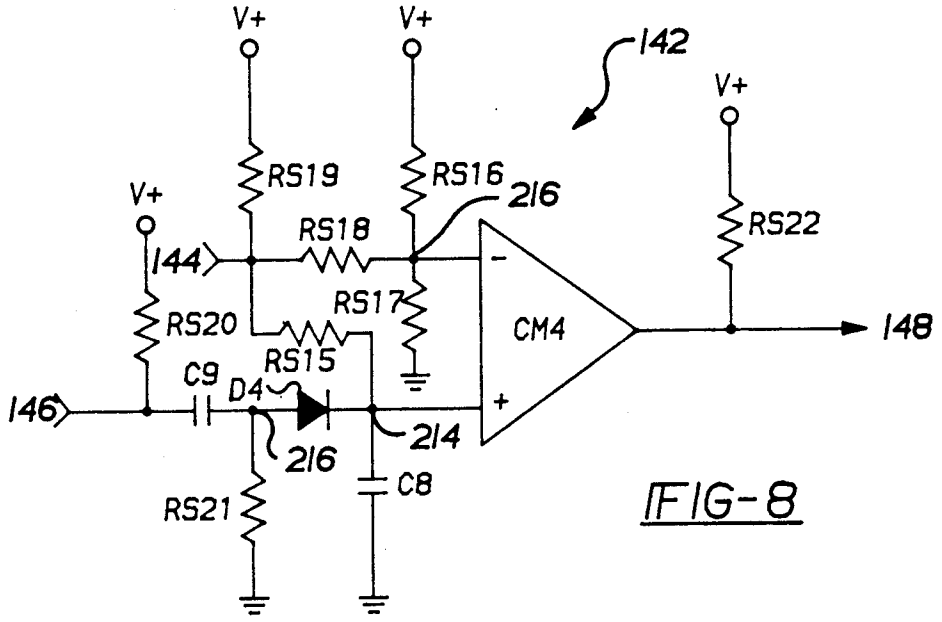
V+
V+
142
V+
RS19
RS16
216
V+
RS18
RS22
144
RS17
RS20
CM4
148
RS15
C9
D4
146
214
216
C8
RS21

FIG-8

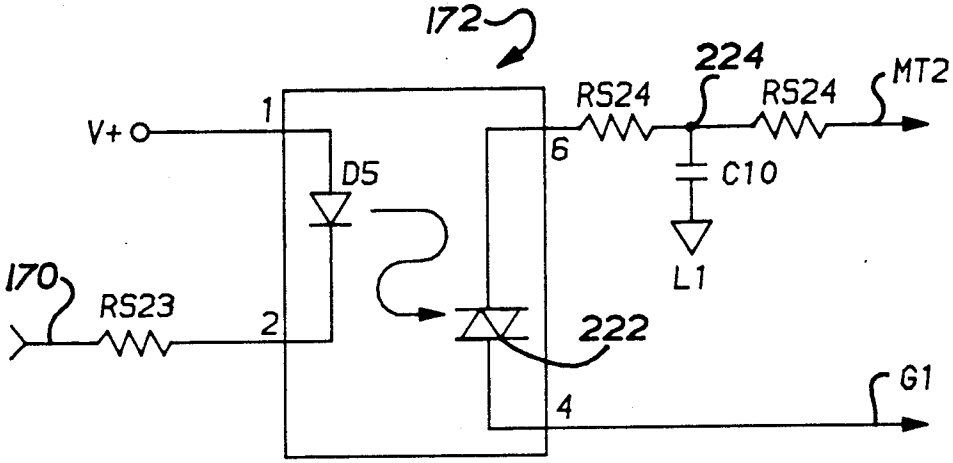

FIG-9

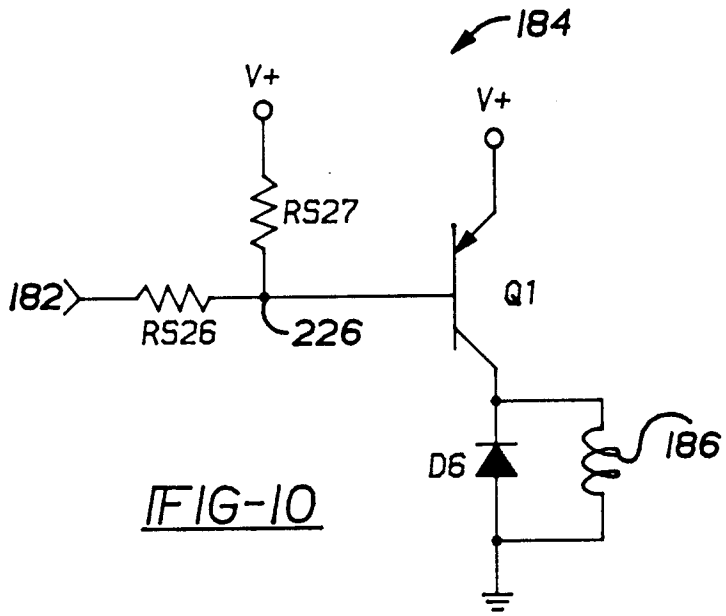

FIG-10

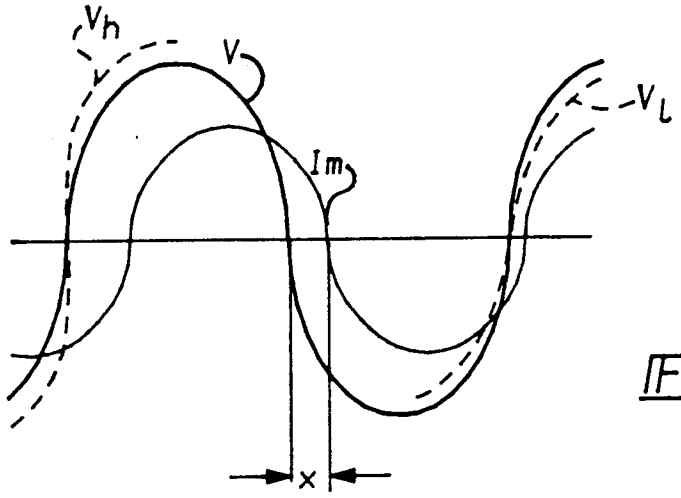

FIG-11A

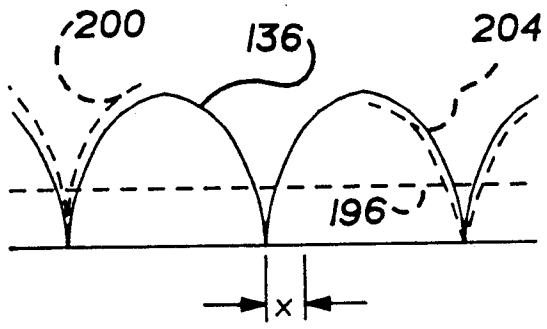

FIG-11B

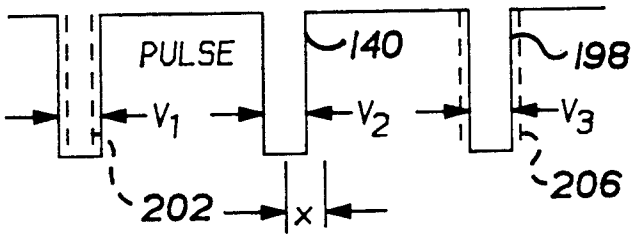

FIG-11C

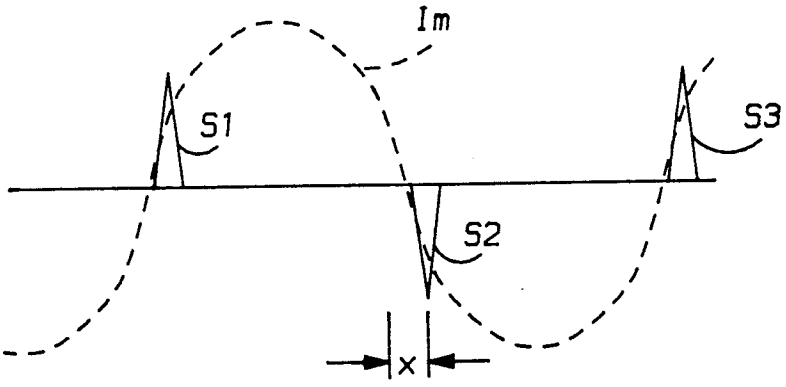

FIG-11D

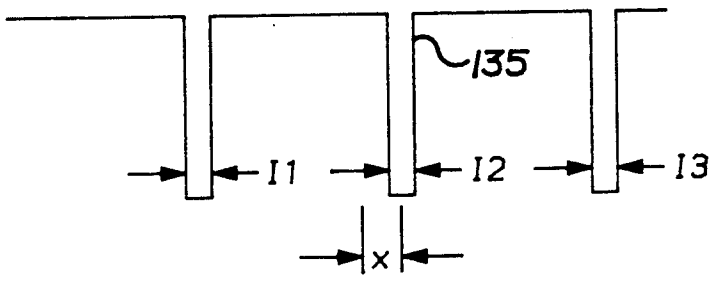

FIG-11E

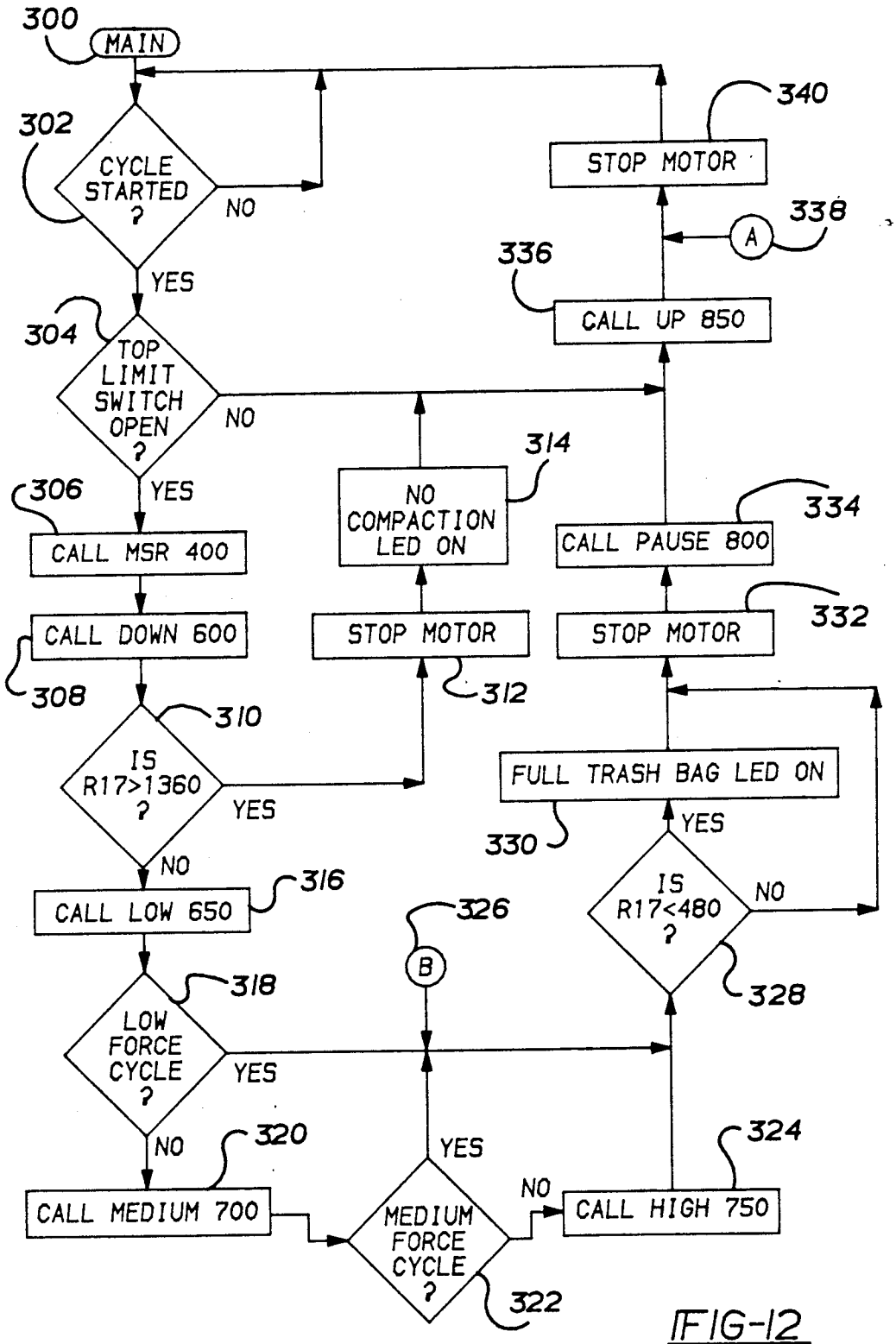
300
MAIN
302
CYCLE STARTED ?
NO
YES
304
TOP LIMIT SWITCH OPEN ?
NO
YES
306
CALL MSR 400
CALL DOWN 600
308
310
IS R17>1360 ?
YES
NO
316
CALL LOW 650
318
LOW FORCE CYCLE ?
YES
NO
320
CALL MEDIUM 700
MEDIUM FORCE CYCLE ?
322
YES
NO
324
CALL HIGH 750
326
B
314
NO COMPACTION LED ON
STOP MOTOR
312
340
STOP MOTOR
338
A
336
CALL UP 850
334
CALL PAUSE 800
STOP MOTOR
332
FULL TRASH BAG LED ON
330
YES
IS R17<480 ?
NO
328

FIG-12

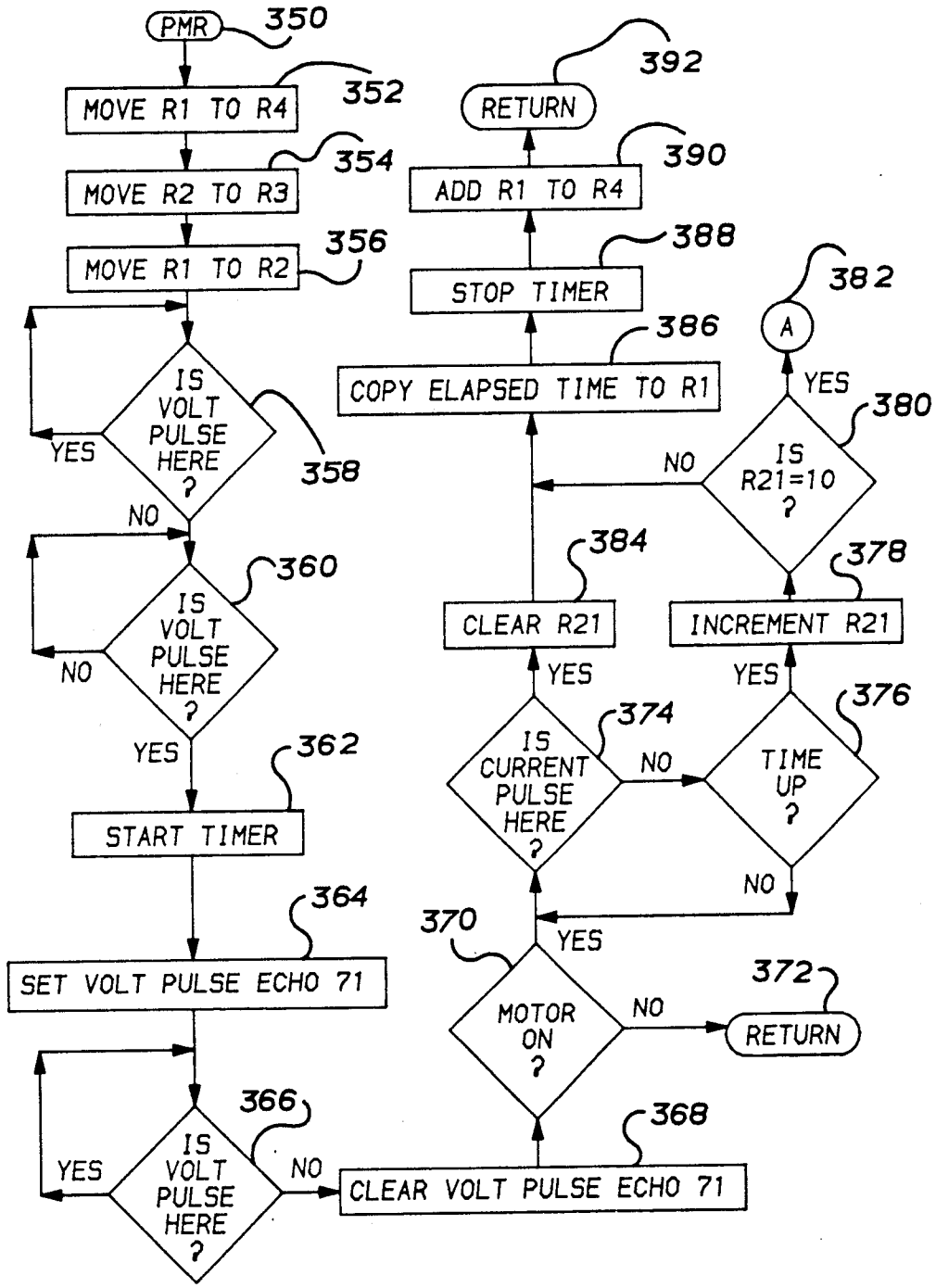
PMR
350
MOVE R1 TO R4
352
MOVE R2 TO R3
354
MOVE R1 TO R2
356
IS VOLT PULSE HERE ?
358
YES
NO
IS VOLT PULSE HERE ?
360
NO
YES
START TIMER
362
SET VOLT PULSE ECHO 71
364
IS VOLT PULSE HERE ?
366
YES
NO
CLEAR VOLT PULSE ECHO 71
368
MOTOR ON ?
370
NO
YES
RETURN
372
IS CURRENT PULSE HERE ?
374
NO
YES
CLEAR R21
384
TIME UP ?
376
NO
YES
INCREMENT R21
378
IS R21=10 ?
380
NO
YES
A
382
COPY ELAPSED TIME TO R1
386
STOP TIMER
388
ADD R1 TO R4
390
RETURN
392

FIG-13

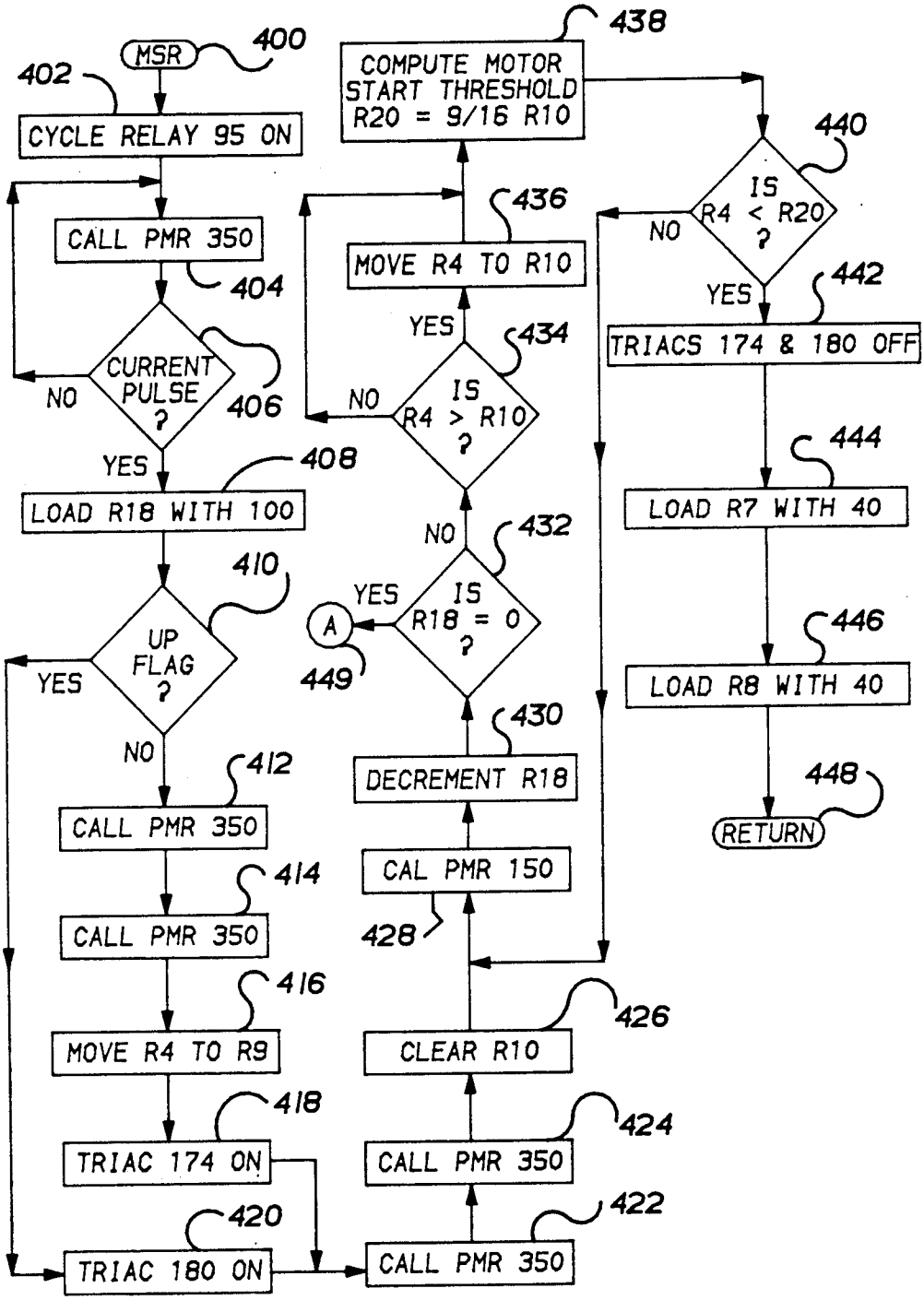
MSR
400
402
CYCLE RELAY 95 ON
CALL PMR 350
404
CURRENT PULSE ?
406
NO
YES
408
LOAD R18 WITH 100
410
UP FLAG ?
YES
NO
412
CALL PMR 350
414
CALL PMR 350
416
MOVE R4 TO R9
418
TRIAC 174 ON
420
TRIAC 180 ON
438
COMPUTE MOTOR START THRESHOLD R20 = 9/16 R10
436
MOVE R4 TO R10
434
IS R4 > R10 ?
YES
NO
432
IS R18 = 0 ?
YES
NO
A
449
430
DECREMENT R18
CAL PMR 150
428
CLEAR R10
426
CALL PMR 350
424
CALL PMR 350
422
440
IS R4 < R20 ?
NO
YES
442
TRIACS 174 & 180 OFF
444
LOAD R7 WITH 40
446
LOAD R8 WITH 40
448
RETURN

FIG-14

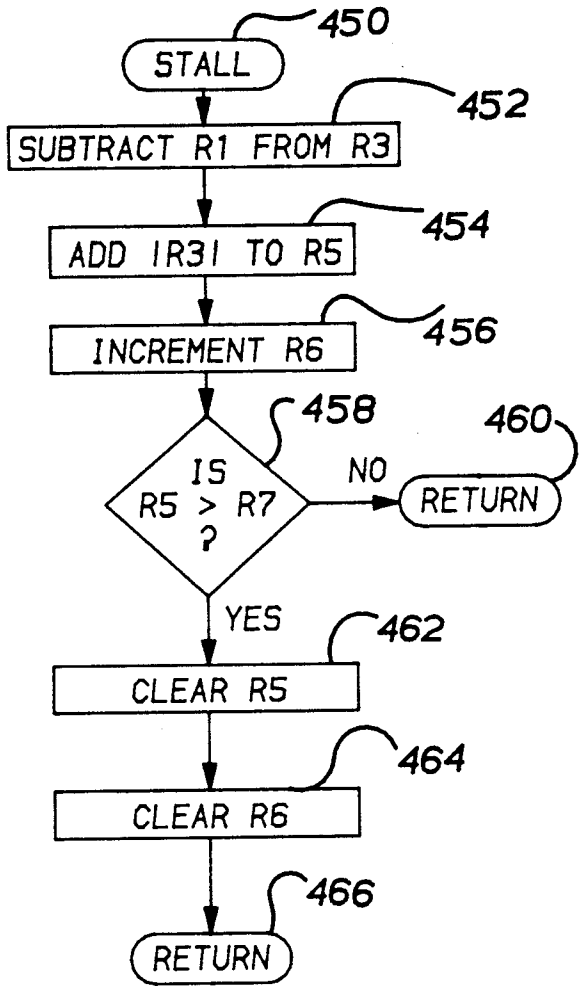
450
STALL
452
SUBTRACT R1 FROM R3
454
ADD |R3| TO R5
456
INCREMENT R6
458
IS R5 > R7 ?
NO
460
RETURN
YES
462
CLEAR R5
464
CLEAR R6
466
RETURN

FIG-15

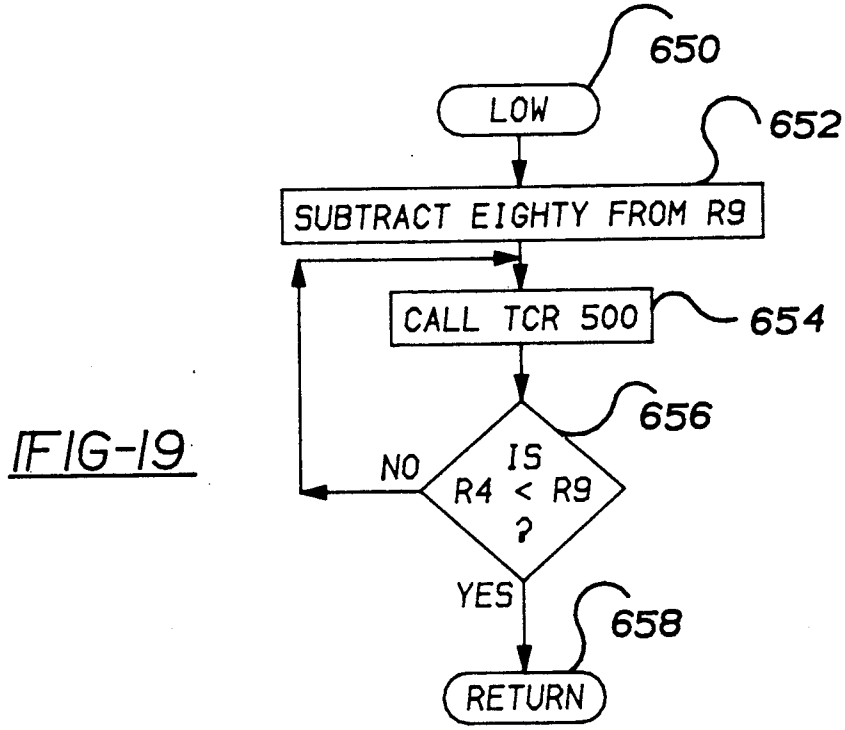
650
LOW
652
SUBTRACT EIGHTY FROM R9
CALL TCR 500
654
656
IS R4 < R9 ?
NO
YES
658
RETURN

FIG-19

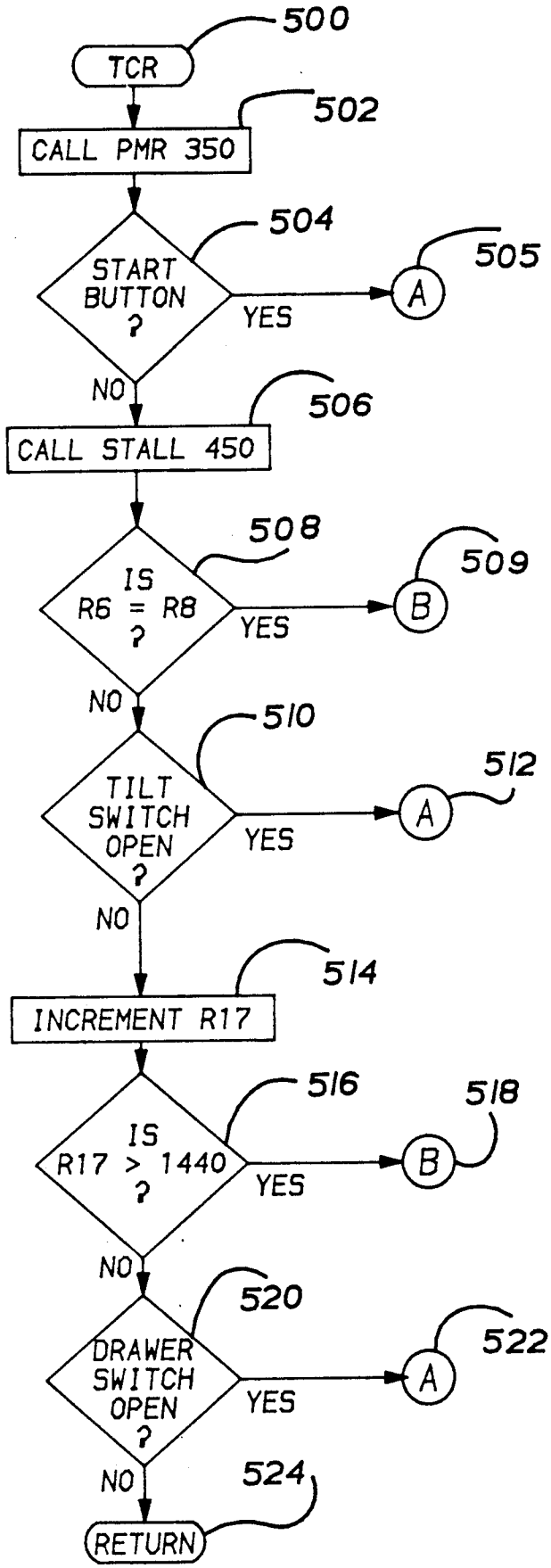
500
TCR
502
CALL PMR 350
504
START BUTTON ?
YES
505
A
NO
506
CALL STALL 450
508
IS R6 = R8 ?
YES
509
B
NO
510
TILT SWITCH OPEN ?
YES
512
A
NO
514
INCREMENT R17
516
IS R17 > 1440 ?
YES
518
B
NO
520
DRAWER SWITCH OPEN ?
YES
522
A
NO
524
RETURN

FIG-16

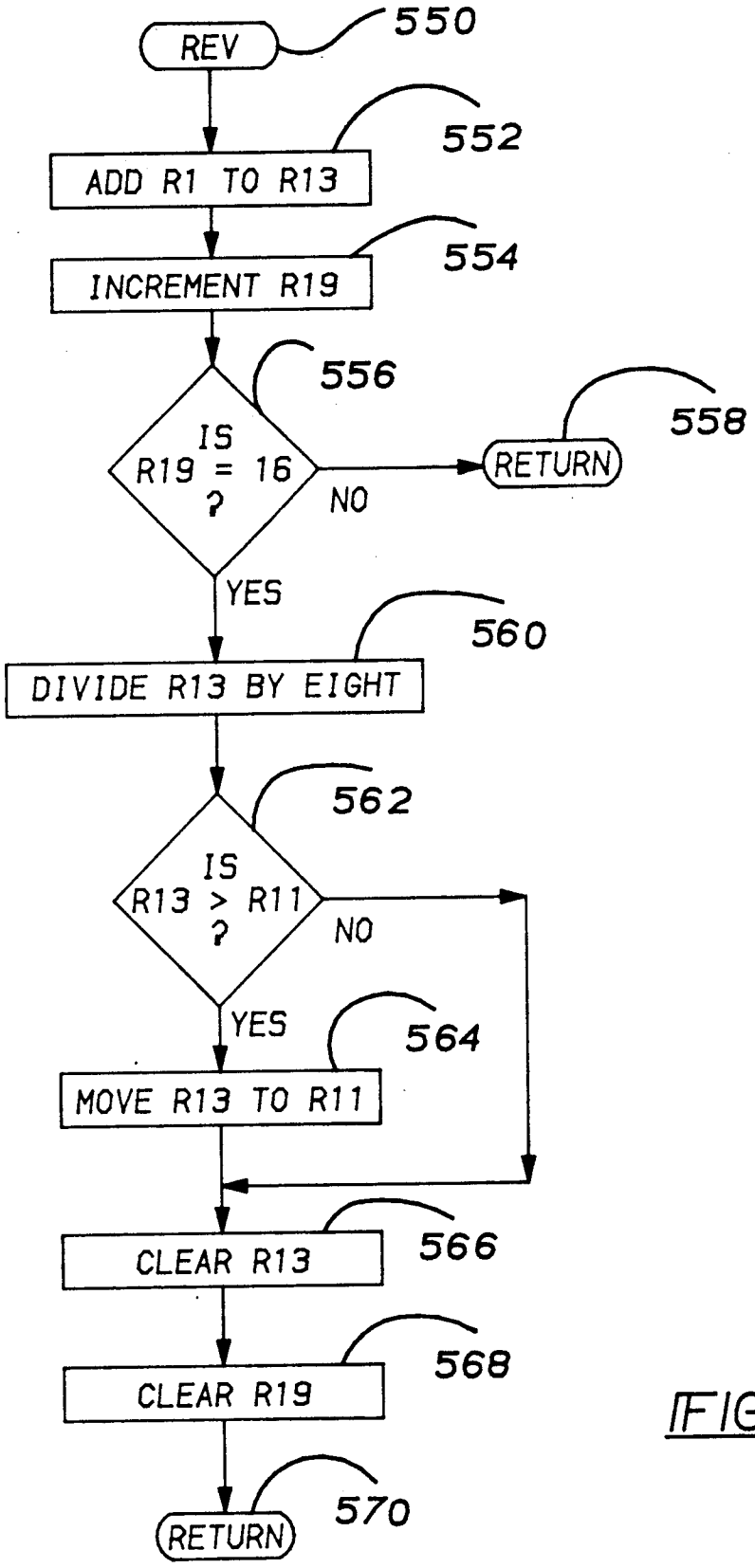
REV
550
ADD R1 TO R13
552
INCREMENT R19
554
IS R19 = 16 ?
556
NO
RETURN
558
YES
DIVIDE R13 BY EIGHT
560
IS R13 > R11 ?
562
NO
YES
MOVE R13 TO R11
564
CLEAR R13
566
CLEAR R19
568
RETURN
570

FIG-17

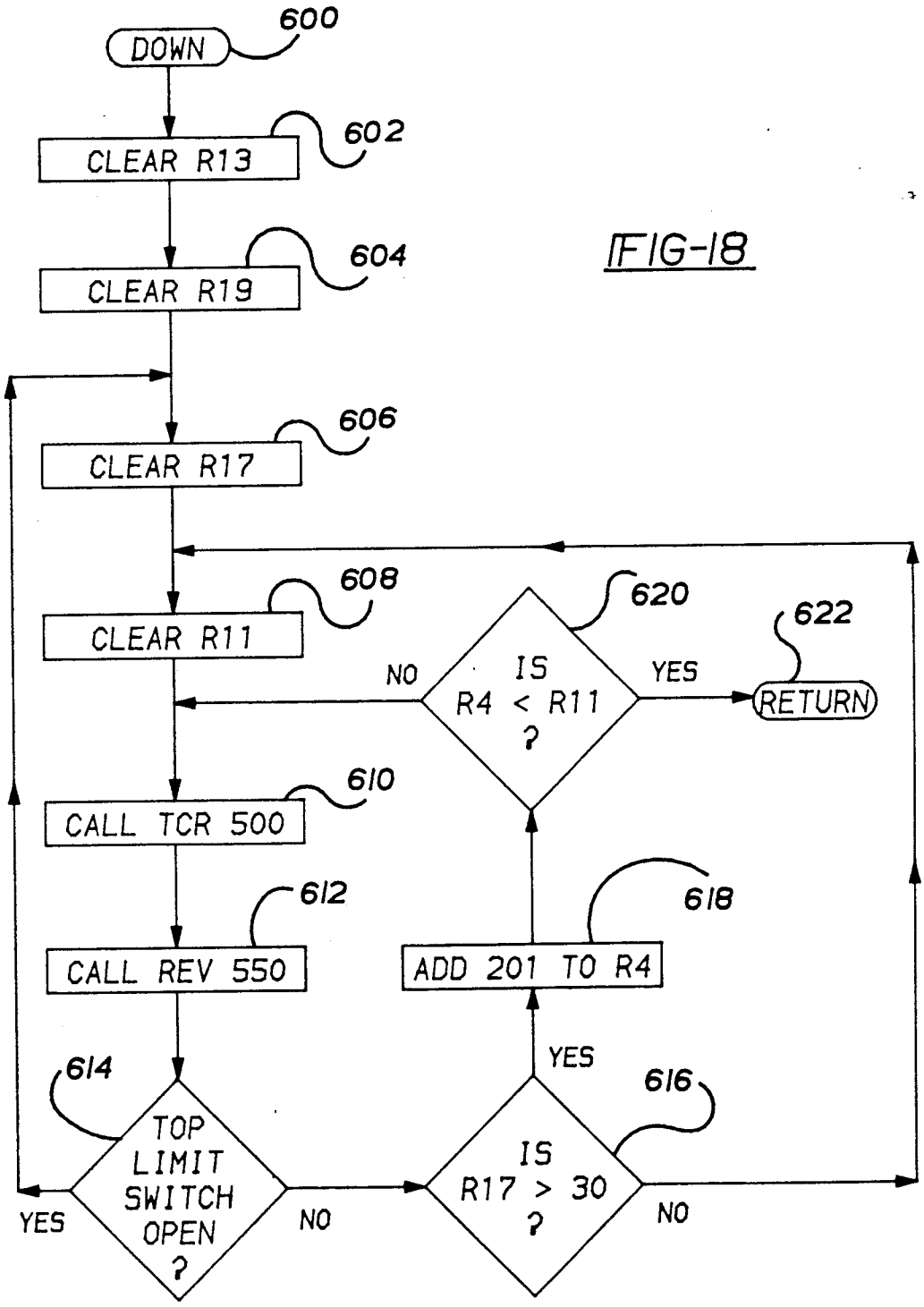
600
DOWN
602
CLEAR R13
604
CLEAR R19
606
CLEAR R17
608
CLEAR R11
610
CALL TCR 500
612
CALL REV 550
614
TOP LIMIT SWITCH OPEN ?
YES
NO
616
IS R17 > 30 ?
YES
NO
618
ADD 201 TO R4
620
IS R4 < R11 ?
NO
YES
622
RETURN

FIG-18

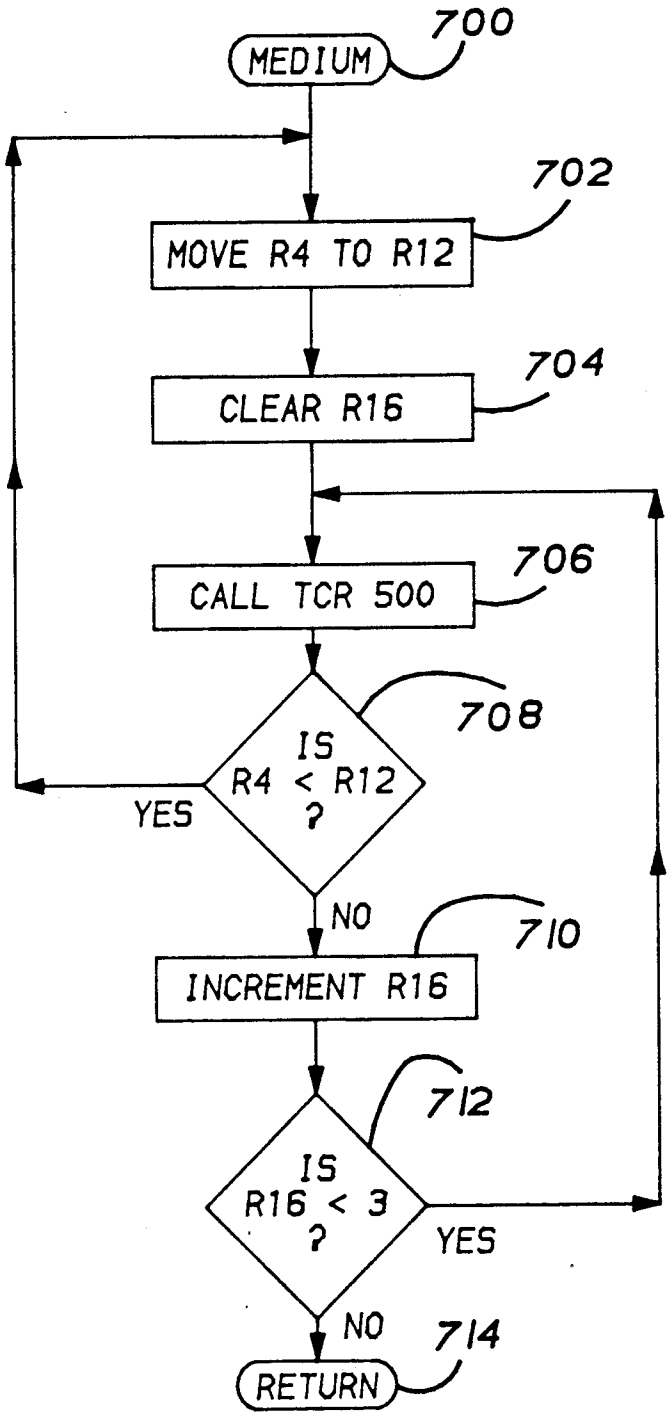
700
MEDIUM
702
MOVE R4 TO R12
704
CLEAR R16
706
CALL TCR 500
708
IS R4 < R12 ?
YES
NO
710
INCREMENT R16
712
IS R16 < 3 ?
YES
NO
714
RETURN

FIG-20

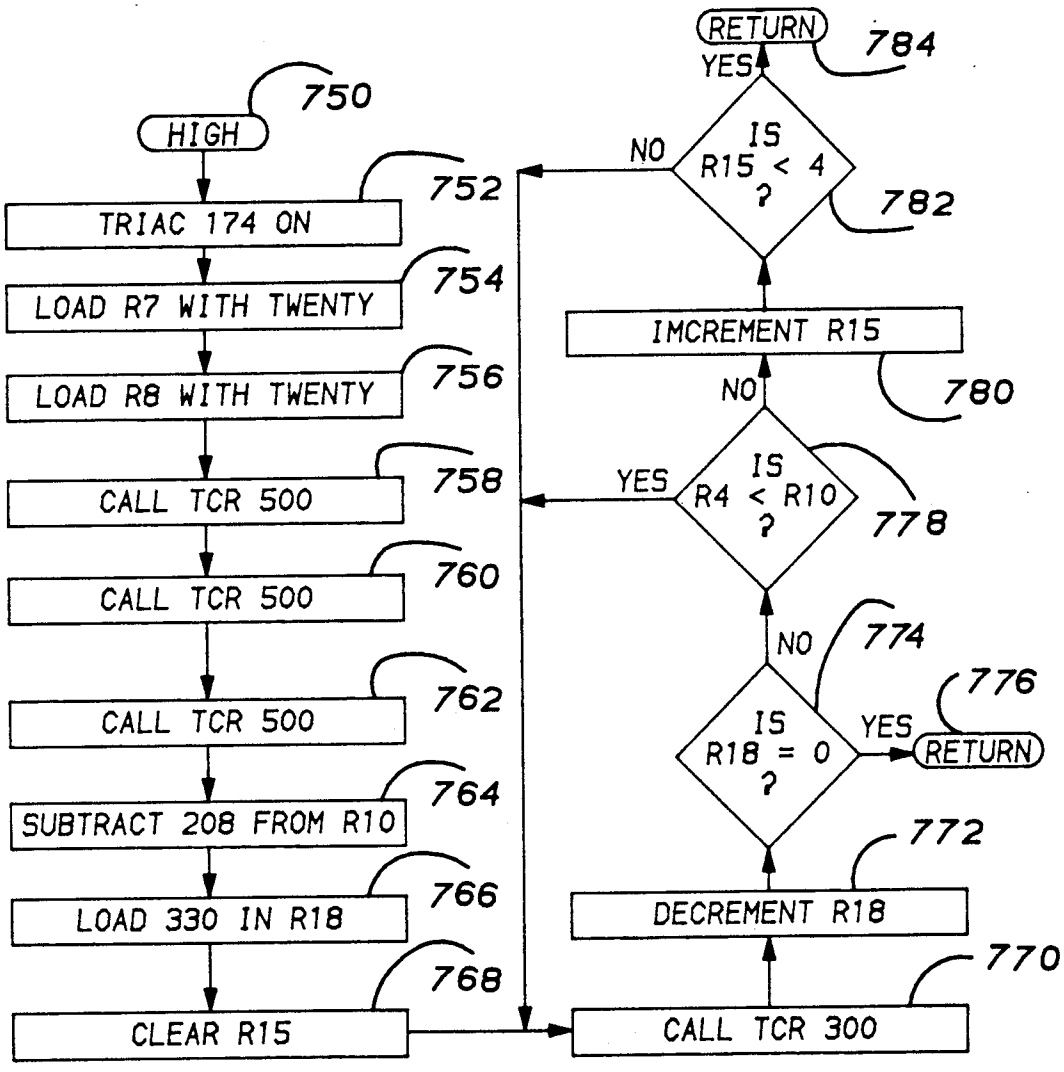
HIGH
750
TRIAC 174 ON
752
LOAD R7 WITH TWENTY
754
LOAD R8 WITH TWENTY
756
CALL TCR 500
758
CALL TCR 500
760
CALL TCR 500
762
SUBTRACT 208 FROM R10
764
LOAD 330 IN R18
766
CLEAR R15
768
CALL TCR 300
770
DECREMENT R18
772
IS R18 = 0 ?
774
YES
RETURN
776
IS R4 < R10 ?
778
NO
IMCREMENT R15
780
IS R15 < 4 ?
782
NO
YES
RETURN
784

FIG-21

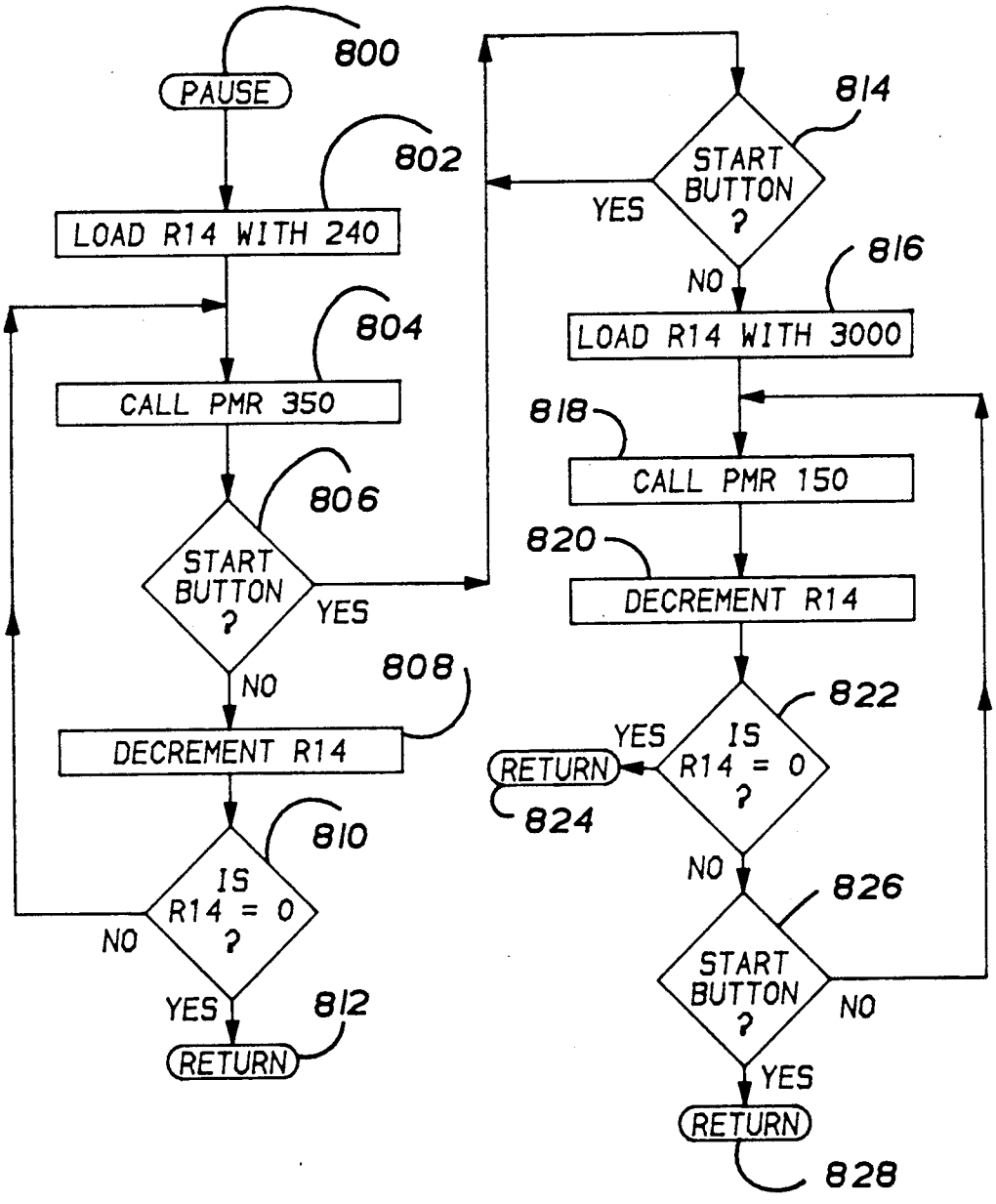
800
PAUSE
802
LOAD R14 WITH 240
804
CALL PMR 350
806
START BUTTON ?
YES
NO
808
DECREMENT R14
810
IS R14 = 0 ?
NO
YES
812
RETURN
814
START BUTTON ?
YES
NO
816
LOAD R14 WITH 3000
818
CALL PMR 150
820
DECREMENT R14
822
IS R14 = 0 ?
YES
RETURN
824
NO
826
START BUTTON ?
NO
YES
RETURN
828

FIG-22

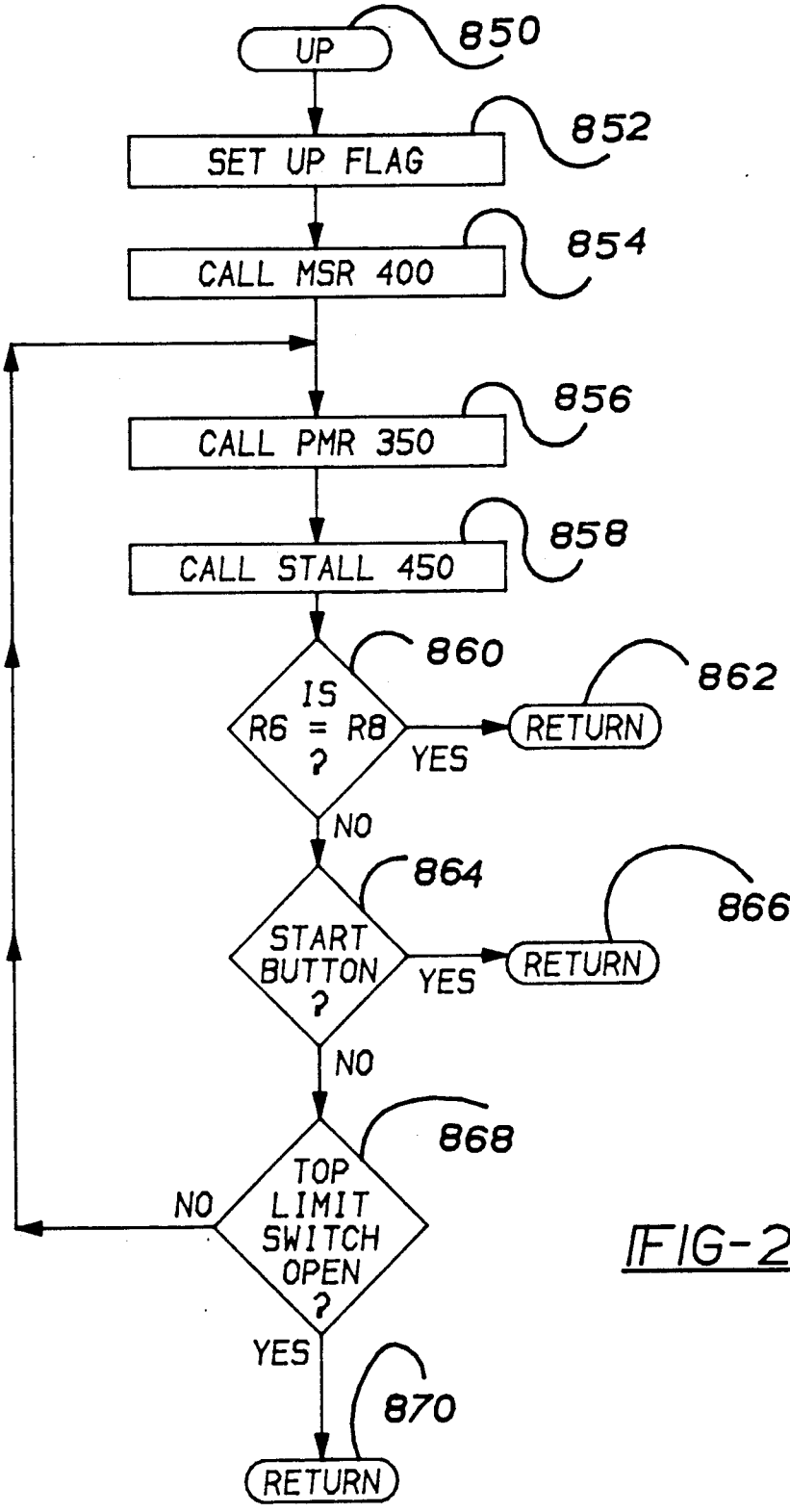
UP
850
SET UP FLAG
852
CALL MSR 400
854
CALL PMR 350
856
CALL STALL 450
858
IS R6 = R8 ?
860
YES
RETURN
862
NO
START BUTTON ?
864
YES
RETURN
866
NO
TOP LIMIT SWITCH OPEN ?
868
NO
YES
RETURN
870

FIG-23

ELECTRONIC CONTROL FOR AN APPLIANCE

This application is a continuation-in-part of two applications both entitled "Electronic Control For an Automatic Washing Machine With a Reversing PSC Motor" having U.S. Ser. Nos. 392,473 and 392,368 both filed Aug. 11, 1989 by the same inventor as in the present application. Both parent applications disclose control circuitry and logic similar to that of the present application.

BACKGROUND OF THE PRESENT INVENTION

The present invention is directed to a control for an appliance and more particularly to an electronic control for a compactor having a split-phase induction drive motor.

In a conventional refuse compactor, a ram is driven into a refuse disposal compartment to compact trash disposed therein and continues advancing until the motor stalls. The ram is subsequently driven out of the refuse disposal compartment. Various drive mechanisms for refuse compactors are disclosed in U.S. Pat. No. 3,353,478 to Stephen Hawkin; U.S. Pat. No. 3,732,805 to Jerry W. Moon; U.S. Pat. No. 3,772,987 to Charles R. Difley; U.S. Pat. No. 3,839,954 to Joseph F. Burgeois; U.S. Pat. No. 3,921,515 to William A. Eckerle; U.S Pat. No. 4,007,678 to John K. C. Gustavson, et. al.; U.S. Pat. No. 4,188,877 to Aman U. Khan; and U.S. Pat. No. 4,565,125 to Aman U. Khan.

Various mechanical and electronic controls have been designed for regulating the operation of the drive mechanism of a trash compactor. For example, Einar O. Engebretsen shows a compactor cycle control in U.S. Pat. No. 3,962,964 wherein a dwell period is provided at the end of the compaction cycle.

U.S. Pat. No. 3,855,919, Richard W. Potter shows a control system for a compacting apparatus including signal lamps for showing the direction of movement of the ram. The apparatus includes a time delay circuit for automatically shutting down the compactor when any of the operational cycles thereof continues beyond a predetermined time limit.

In U.S. Pat. No. 3,398,433 of Charles J. Borum, a trash compactor with a clock timer control is disclosed for providing an extended delay period after a compacting stroke. The clock is provided to permit the automatic extended compaction at a period of time during the day when the compactor is unlikely to be in use for a substantial length of time. The control operates the ram independently of any manual initiation of the apparatus to effect the compacting stroke at the predetermined time and to cause the stopping of the ram for the delay period during that independently initiated compaction stroke. In U.S. Pat. No. 3,543,676 of Gordon H. Brown, another refuse compactor is shown having control circuitry for regulating the operation of the compactor automatically.

Michael J. Bottas et al, in U.S. Pat. No. 3,613,560, show a refuse compactor including a control circuit which permits operation of the ram only when the drawer is substantially in the compacting position. The control circuit includes a tilt switch which is arranged in the circuit to permit reverse withdrawal movement of the ram by depression of a manually operable push-button.

Jerome F. Stratman et al, in U.S. Pat. No. 3,821,927 show a refuse compactor control system having a lower limit switch connected in parallel with a centrifugal switch.

In U.S. Pat. No. 3,831,513 of Philip Tashman, a portable solid waste compactor is shown having a compacting ram which has a stroke varying with the reaction force of the waste material being compacted therein. An interlock associated with the ram prevents operation of the compactor upon removal of the container in which the refuse is compacted. A guard gate is automatically closed across the refuse chute opening upon downward compacting movement of the ram to prevent injury to the operator's hand. If the guard gate is prevented from closing by an obstruction, a switch causes immediate reversal of the ram to its uppermost position.

In U.S. Pat. No. 4,062,282, Samuel Jacob Miller et al show a refuse compactor having a tilt switch for terminating operation of the compacting ram in the event of a preselected tilt movement of the receptacle during the compacting operation. Means are provided for preventing movement of the receptacle sufficient to open the receptacle safety switch during the compacting operation thereby preventing discontinuation of energization of the ram motor during the compaction cycle which could immobilize the compactor apparatus in midcycle.

While these prior art control patents teach that it is desirable to monitor performance of a compactor to determine, for example, when compaction is complete or when the bag is full, the prior art uses multiple sensors, typically mechanical sensors, to monitor the operation. Furthermore, the maximum torque applied is limited to the main winding breakdown torque.

A more generic control system for various appliances having an AC induction drive motor, including examples of an automatic washing machine, a dryer, an air conditioner, a refrigerator, and a dishwasher, is shown in my U.S. Pat. No. 4,481,786, assigned to the assignee of the present invention. That control system employs a ferrite core sensor having a primary winding that is formed of two turns of the drive motor's run winding, the sensor having a single turn secondary winding that forms a sense winding coupled to a motor phase monitoring circuit. The sense winding provides a signal representing a polarity change in the run winding current. The current polarity change signal is used by the motor phase monitoring circuit to provide a voltage compensated motor phase angle pulse to a microcomputer for the appliance to control various operations of the appliance More particularly, a digital representation of the motor phase angle pulse is used by the microcomputer to monitor the starting of the drive motor by detecting a characteristic decrease in the motor phase angle representation. The motor phase angle representation is further used by the microcomputer of an automatic washing machine to determine the agitator torque which is in turn used by the microcomputer to automatically control the water level of the washing machine. An average motor torque number is also determined from the motor phase angle representation wherein the average motor torque number is used to provide an end of drain control for the washing machine.

While my prior patent application suggests that the control may be used to control any AC induction motor controlling any appliance, including a split phase induction motor controlling a trash compactor, the applicability or desirability of such a control to the specific needs of a compactor was neither addressed nor considered. The present invention is directed to a control

utilizing some of the teachings of my aforementioned U.S. patent to a refuse compactor but applying a novel circuit and novel logic to detect the onset of stalling as the ram compacts the refuse and using that information to control the operation of a compactor in a novel way.

SUMMARY OF THE INVENTION

The present invention provides a control for a split phase induction motor that detects the onset of stalling and temporarily boosts the torque of the motor in order to perform more work at precisely the time when the motor is beginning to stall. In particular, the control provides more torque to the ram of a refuse compactor at the time when the ram of the compactor engages the refuse and begins to stall as a result of the resistance of the refuse to compaction.

The present invention also provides a force level control for compactor that permits manual selection from three different force levels which result in three different compaction rates.

The preferred embodiment of the present invention provides a control for refuse compactor with a split-phase induction drive motor. The control includes a ferrite core sensor on the main winding of the drive motor sampling circuitry sampling the lagging phase angle of the motor main winding current at a predetermined sample rate through a refuse compaction stroke, a selector for manually selecting high, medium or low compaction force, a controller selectively operable to obtain medium force by terminating the stroke when the compaction force exceeds the main winding breakdown torque, a controller for selectively applying a high force by selectively reactivating the start winding of the motor instead of terminating the cycle, and a controller selectively operable to obtain a low force by terminating the stroke of the ram when the phase sample falls below a predetermined threshold level. The predetermined threshold level for the low force cycle is preferably defined at the start of each cycle by a locked rotor main winding phase sample acquired prior to starting the motor

The present invention further provides a control for a refuse compactor that monitors the phase angle of a motor winding and determines a no load and a full bag condition.

In the preferred embodiment, the present invention provides a control for a refuse compactor having a ram driven by a split phase induction drive motor. The control includes sampling circuitry sampling the lagging phase angle of the motor main winding current during the compaction stroke, a controller detecting the onset of compaction from the lagging phase angle information, such that a no load condition is detected by the failure to detect compaction after a first predetermined time and such that a full bag condition is detected by the detection of compaction by a second predetermined time.

It is therefore the primary object of the present invention to provide a reliable refuse compactor control for a refuse compactor with a split-phase induction drive motor.

It is another object of the present invention to provide a compactor control providing two or more force level selections to thereby allow the user to control the approximate full trash bag weight.

It is still another object of the present invention to provide a control for a refuse compactor that applies or selectively applies increased torque and thereby provides increased compaction at the onset of compaction than was previously available from the motor.

It is yet another object of the present invention to provide a control for refuse compactor that detects the onset of compaction without the use of a centrifugal switch.

It is another object of the present invention to provide a control for a refuse compactor that monitors the characteristics of a motor winding to determine the onset of compaction, as well as a no load and a full bag condition.

It is a further object of the present invention to provide an electronic control for a split phase induction motor that temporarily activates the start winding of the motor up on the onset of a motor stalling condition such as to boost the torque of the motor at the time of peak load on the motor where the onset of stalling is detected by monitoring the lagging phase angle of the motor main winding.

These and other objects, advantages and features of the present invention will become apparent to those skilled in the art upon review of the following description of the preferred embodiment in conjunction with the drawings appended.

BRIEF DESCRIPTION OF THE DRAWINGS

In the drawing wherein like reference numerals refer to like components throughout:

FIG. **1** is a perspective view of a conventional type of refuse compactor having an electronic control according to the present invention;

FIG. **2** is a partly schematic and partly cutaway perspective view of the refuse compactor of FIG. **1** with the cabinet removed;

FIG. **3** is a characteristic speed-torque curve for a split-phase induction motor controlled by electronic control of the present invention;

FIG. **4** is a schematic circuit showing a domestic refuse compactor control, according to the present invention, for controlling the compactor of FIGS. **1** and **2**;

FIG. **5** is a circuit diagram for the voltage regulator circuit of FIG. **4**;

FIG. **6** is a circuit diagram for the volt pulse circuit of FIG. **4**;

FIG. **7** is a circuit diagram for the current pulse circuit of FIG. **4**;

FIG. **8** is a circuit diagram for the watchdog circuit of FIG. **4**;

FIG. **9** is a circuit diagram for the TRAIC driver circuit of FIG. **4**;

FIG. **10** is a circuit diagram for the relay driver circuit of FIG. **4**;

FIGS. **11***a*, **11***b*, **11***c*, **11***d* and **11***e* are graphic representations of various waveforms and pulses which are present in the circuits shown in FIGS. **4**, **5**, **6** and **7**;

FIG. **12** is a flow chart for the MAIN program of the microprocessor processor of FIG. **4** for controlling a domestic refuse compactor cycle which directly or indirectly calls the various sub-routines of FIGS. **13** through **23** to control the refuse compactor of FIGS. **1** and **2** according to the present invention;

FIG. **13** is a flow chart for the phase monitoring routine to monitor the lagging main winding phase angle when the motor is ON, and further, to provide a one half line cycle delay when the motor if OFF;

FIG. **14** is a flow chart for the motor start routine;

FIG. 15 is a flow chart for the STALL routine to detect a stalled motor condition;

FIG. 16 is a flow chart for the trash compaction routine;

FIG. 17 is a flow chart for the revolution routine to accumulate successive sums of motor phase numbers and compute a minimum base line torque value for use in the down routine;

FIG. 18 is a flow chart for the DOWN routine for comparing the sum of the last two motor phase numbers to a base line motor torque, threshold to provide rapid detection of the transition to compaction, or, ram bottoming;

FIG. 19 is a flow chart for the LOW routine to detect when the load force exceeds a computed threshold below the available motor breakdown torque;

FIG. 20 is a flow chart for the MEDIUM routine to detect when the load torque has increased to a point just beyond the available motor breakdown torque;

FIG. 21 is a flow chart for the HIGH routine to detect when the motor is stalling after obtaining additional torque by reactivating the motor ram DOWN start winding;

FIG. 22 is a flow chart for the PAUSE routine to prolong the maximum compaction period; and

FIG. 23 shows a flow chart for the UP routine to return the ram to the home position.

DESCRIPTION OF THE PREFERRED EMBODIMENT

A conventional type of refuse compactor **10**, to which the present invention is adaptable, is illustrated in FIG. **1**. The refuse compactor **10** and its mechanical components are well known in the art and are therefore not described in great detail herein. The compactor **10** comprises a generally rectangular cabinet **12** which encloses a drawer assembly **15** including a refuse disposal receptacle **14** translatable along guide rails **16** in drawer-like fashion through an opening **18** in the front wall **20** of the cabinet **12** to situate the receptacle **14** selectively in either the FIG. **1** position for accepting refuse or within the cabinet **12**. The receptacle **14** is integral with and manually controlled through a handle **24** mounted on a front drawer panel **22**. A control panel **26** is mounted on the upper portion of the front wall **20** to operate the compactor. The control panel **28** includes a novel cycle selector **28** and a start button **30**, described later in detail.

A ram assembly **32** of the compactor **10** is depicted in FIG. **2**. The ram assembly **32** includes a metal ram top member **38**. A ram cover **40** with a refuse engaging surface is suspended beneath the ram top member **40** by a ram housing **39**, as is well known in the art. The ram assembly **32** is forcibly driven by means of a drive assembly **42** associated with the base **46** of the compactor. The ram assembly **32** is coupled to the drive assembly **42** through a suitable connection which includes vertical power screws **44***a* and **44***b*. The lower end of each power screw is journaled in a suitable conventional bearing (not shown) at the base **46** of the compactor. The power screws **44***a* and **44***b* each threadably couples with a floating drive nut assembly including power nut **48***a* and **48***b*, respectively, fixed against the upper surface of ram top member **38**. An exemplary ram assembly of the type described above is disclosed in U.S. Pat. No. 4,565,125.

The drive assembly **42** includes a motor **50**, driving a chain **52** connected to a moving sprocket gear **54** at the bottom of each of the power screws **44***a* and **44***b*. An exemplary drive assembly of the type described is disclosed in U.S. Pat. No. 4,188,877. In operation, the drive assembly **42** forcibly reciprocates the ram assembly **32** into and out of the refuse receptacle **14** to compress the refuse therein.

And as is well known, the refuse compactor **10** may be provided with a variety of mechanical sensors and switches including a drawer safety switch **56**, a drawer tilt switch **58** and a drive motor centrifugal switch **60**, a top limit switch **62**, and a directional switch **64**. However, in the preferred embodiment of the present invention, the centrifugal switch **60** and the directional switch **64** are omitted since their functions are obtained from the software described later herein.

In the preferred embodiment of the present invention, the motor **50** is a split-phase induction drive motor with separate clockwise and counter-clockwise auxiliary windings and with no centrifugal switch. The present invention utilizes the characteristic relationships between the motor speed, the torque, and the main winding phase angle to monitor and control the operation of the refuse compactor. The operation of the control of the present invention is best understood by appreciating these characteristic relationships.

When a single phase induction motor, having one or more split phase auxiliary windings, is operating on the main run winding, the alternating main winding current lags the alternating voltage across the main winding. The phase lag, or angle, by which the main winding current lags the voltage is inversely related to the motor output torque. Thus, with a lightly loaded split phase induction motor, the alternating main winding current lags the voltage by a large phase angle. If the load torque is gradually increased, the corresponding phase lag of the main winding current with respect to the voltage will decrease until the load torque exceeds the motor breakdown torque, whereupon the motor will begin to stall. When the motor stalls, the main winding phase angle increases somewhat as the motor speed decreases toward zero RPM.

The situation changes, however, when the same split phase induction motor is being operated with both the main winding and the auxiliary winding energized, as is the case, say, when the motor is starting. With both the main and the auxiliary windings energized, the main winding phase angle starts out large and decreases with increasing motor speed. Thus, as the motor is accelerated from zero RPM with both main and auxiliary windings energized, the main winding phase angle decreases as the motor comes up to speed. Conversely, if the motor is stalled with both the main and auxiliary winding energized, the main winding phase angle will start out small and increase as the motor speed decreases

These relationships are used by the present invention to provide distinct low, medium and high compaction forces for a domestic refuse compactor in a manner described in detail later herein. It is the motor main winding phase angle that is being measured, not the total motor current. It will be appreciated by those skilled in the art that during those times when neither auxiliary winding is energized, the main winding current is also the total motor current and the main winding phase angle is also the total motor phase angle.

It should be noted that the preferred embodiment of the present invention does not use phase angle control. It is the natural main winding phase angle that is being

sampled. A ferrite core sensor is used to provide a timing signal in response to the main winding current zero-crossings, not in response to the magnitude of the main winding current.

A representative speed-torque curve for a four-pole split phase induction motor of the type used by the present invention is shown graphically in FIG. **3**. The graph illustrates the synchronous speed line **66**, the starting torque curve **68** and the operating torque curve **70**. The starting torque curve **68** represents the torque available when both the main and the auxiliary winding are energized in parallel. The operating torque curve **70** represents the torque for the motor running on the main winding only.

When the motor is running under a very light load as at point **72**, the main winding phase angle is comparatively large. As the motor load torque is increased toward the breakdown torque at maximum torque point **74**, the main winding phase angle decreases to a minimum. If the motor is allowed to stall while running on the main winding only, the main winding phase angle at stall shown at point **76**, will be higher than the minimum main winding phase angle at point **80**, but not as high as the lightly loaded point **72**. If the proper auxiliary winding is activated at an activation point **78** near the maximum torque point **74** instead of allowing the motor to stall on the main winding alone, the available motor torque will temporarily increase beyond the maximum main winding breakdown torque at point **74**. The motor will follow the starting torque curve **68** as the motor stalls. The main winding phase angle will abruptly decrease to a low value when the auxiliary winding is activated and increase as the motor speed drops due to load torque in excess of the available motor torque.

The present invention uses this principal to obtain a higher torque than is otherwise possible from the motor. Furthermore, the present invention uses the phase angle information to selectively provide other torque levels from the motor in a manner to be disclosed shortly.

Referring now to FIG. **4**, a schematic circuit showing a domestic refuse compactor control, according to the present invention, with a split phase induction motor, ferrite core sensor, two motor auxiliary winding TRIACs, two TRIAC driver circuits, cycle relay, relay driver circuit, voltage regulator circuit, watchdog circuit, volt pulse circuit, current pulse circuit, microcomputer, and, various binary microcomputer input and outputs, described in detail below.

As shown in FIG. **4**, a split phase induction motor **100** has a thermal overload protector **106**, a main, or run, winding **102** and two auxiliary windings **104***a* and **104***b* which are used to start the motor **100** in the clockwise ("CW") or counterclockwise ("CCW") directions, respectively. When the motor **100** is started in the CW direction by the combined main **102** and auxiliary winding **104***a*, the assembly ram **32** moves in the down, or refuse compaction, direction. When the motor **100** is started in the CCW direction by the combined main **102** and auxiliary winding **104***b*, the ram assembly **32** moves in the up direction toward the home, or storage, position. The main winding **102** is connected to the normally open contact **108** of a cycle relay **110** through a single-turn primary winding **112** on a small core **114**. A single-turn sense winding **116** is threaded through the core **114** without regard as to the mutual polarity between the primary winding **112** and the sense winding **116**. The sense winding **116** is connected to a current pulse circuit **118** by electrical leads **120** and **122**.

As shown in FIG. **4**, an alternating source of power, such as 120 VAC, 60 Hertz, is provided having a hot side L1, and a neutral side N.

As shown in FIG. **4**, the motor control **124** is provided with power from the AC source via a voltage regulator circuit **126** by electrical leads **128** and **130**. The voltage regulator circuit **126** is used to generate a regulated source of DC voltage V+ on electrical line **131** appropriate for the microcomputer **134** and other electronics. The voltage regulator circuit **126** also provides a full-wave rectified signal voltage **136** to the volt pulse circuit **138** and a filtered, but unregulated DC bias voltage **132** to the current pulse circuit **118**. The volt pulse circuit **138** provides a binary volt pulse signal **140** to the microcomputer **134**. The current pulse circuit **118** provides a binary current pulse signal **135** to the microcomputer **134**.

A watchdog circuit **142** provides a binary RESET signal **148** to the microcomputer **134**. The microcomputer **134** provides a binary status signal **144** and a binary volt pulse echo signal **146** to the watchdog circuit **142**.

Binary output lines **150** from the microcomputer **134** may be provided for various console indicators such as a full trash bag **152** or no-compaction **154** light emitting diode. Additional binary inputs lines **156** to the microcomputer **134** are also provided. A top limit switch **158** provides a HIGH input to the microcomputer when the ram assembly **32** is in the home position, and, a LOW input to the microcomputer when the ram assembly is in any other position. A drawer switch **160** provides a HIGH input to the microcomputer **134** when the drawer is open, and, a LOW input to the microcomputer **134** when the drawer is in the closed position appropriate for a compaction cycle. The tilt switch provides a HIGH input to the microcomputer **134** when the load encountered by the ram assembly **32** is sufficiently skewed as to warrant termination of the present compaction cycle, and, a LOW input at all other times. The low compaction force cycle selection input **164** is LOW when a LOW-MEDIUM-HIGH cycle selection switch is in the low force cycle position, and, HIGH when in the medium or high cycle positions. The medium compaction force cycle selection input **166** is LOW when the LOW-MEDIUM-HIGH cycle selection switch is in the medium force cycle position, and, HIGH when in the low or high cycle positions. The user's desire for a high compaction force cycle is inferred when low **164** and medium **166** binary inputs are both HIGH.

The start button input **168** to the microcomputer **40** is used to initiate a cycle, terminate a cycle, or, invoke the solid pack cycle pending on when the start button is pressed. The start button input **168** is LOW when the user is pressing the start button, and, HIGH at all other times. It will be apparent to those skilled in the art that an external crystal or ceramic resonator circuit, not illustrated, is used in conjunction with the microcomputer **134** in accordance, with manufacturer specification, to define the internal clock cycles and timing functions. In the exemplary embodiment the microcomputer **145** is a Texas Instruments TMS7040 which has an 8-bit word size and the external crystal is a five megahertz ceramic resonator.

One binary output **170** of the microcomputer **132** is used to control a first TRIAC driver circuit **172**.

The first auxiliary winding **104***a* of the motor **100** is connected to the second main terminal MT2 of TRIAC

172. The first main terminal MT1 of TRIAC 172 is connected to the normally open contact 108 of the cycle relay 110. The cycle relay 110 connects the motor main winding 102 and the auxiliary winding TRIAC 174 to the hot L1 side of the service voltage whenever the motor 100 is ON. Conversely, the cycle relay 110 disconnects the motor main winding 102 and the TRIAC 174 from the service voltage between cycles and when the motor 100 is OFF during a cycle, say, during a pause period when the ram assembly 32 at the bottom of a stroke. A common electrical lead 175 completes a circuit path for the motor main winding 102 and auxiliary winding 104*a* to the neutral side N of the AC power source through the overload protector 106.

Similarly, a binary output 176 of the micro computer 132 is used to control a second TRIAC driver circuit 178. The second auxiliary winding 104*b* of the motor 100 is connected to the second main terminal MT2 of TRIAC 180 controlled by circuit 178. The first main terminal MT1 of TRIAC 180 is connected to the normally open contact 108 of the cycle relay 110. The cycle relay 110 connects the motor main winding 102 and the auxiliary winding TRIAC 180 to the hot L1 side of the service voltage whenever the motor 100 is ON and disconnects the motor main winding 102 and the TRIAC 180 from the service voltage between cycles and when the motor 100 is OFF. The common electrical lead 175 also completes a circuit path for the auxiliary winding 104*b* to the neutral side N of the AC power source through the overload protector 106.

The binary outputs 170 and 176 of the microcomputer 134 are used to control the TRIAC driver circuits 172 and 178 to provide control signals which are applied to the gates G1 and G2 of TRIACs 174 and 180, respectively. Each TRIAC driver circuit 172 and 178 is also connected to main terminal MT1 or MT2 of a TRIAC 174 or 180.

Another binary output 182 of microcomputer 134 is connected to a relay driver circuit 184. Driver circuit 184 is used to control the coil 186 of the cycle relay 110.

The individual circuits of the motor control 124 that are shown in block diagram form in FIG. 4 are illustrated in greater detail in FIGS. 5 through 10.

FIG. 5 is a circuit diagram for the voltage regulator circuit 128 of FIG. 4. The voltage regulator circuit 124 uses the service alternating voltage as an input and generates a regulated DC voltage for all electronic circuits, a full-wave rectified signal voltage for the volt pulse circuit of FIG. 3 and an unregulated, DC bias voltage for the current pulse circuit of FIG. 4.

A centertapped step down transformer is used with diodes D1 and D2 to develop a 120 Hz, full-wave rectified voltage waveform. Capacitor C1 is a pre-filter and capacitor C2 is a post-filter for the voltage regulator integrated circuit 188. Diode D3 isolates the pre-filtered DC voltage at the input to the voltage regulator 188 from the full-wave rectified signal at the cathodes of D1 and D2. Resistors RS1 and RS2 form a voltage divider circuit and provide a sufficient load to forward bias diodes D1 or D2. High frequency noise transduced from the primary to the secondary of transformer TR is filtered by bypass capacitor C3. There are three outputs from the voltage regulator circuit 128. The V+ output 131 is a regulated DC voltage for the microcomputer 134 and other electronic circuits. A filtered, but unregulated DC voltage 132 is available to bias the sensitivity of the current pulse circuit 118 for the effect of variation in service voltage on the magnitude of the ferrite core sensor 114 signal. And, a full-wave rectified signal voltage 136 is developed for the volt pulse circuit 138. In the exemplary embodiment V+ is five volts.

FIG. 6 is a circuit diagram for the volt pulse circuit 138 of FIG. 4. The volt pulse circuit receives a full-wave voltage signal input from the voltage regulator circuit of FIG. 5 and generates a volt pulse train wherein each binary volt pulse straddles the service voltage zero-crossings. The volt pulses occur at twice line frequency, regardless of whether the motor is ON, and, have a pulse width inversely related to the service voltage

The volt pulse circuit 138 comprises resistors RS3, RS4, RS5, RS6, RS7 and RS8, a capacitor C4 and a comparator CM1 which is supplied with V+ from the voltage regulator circuit 128. Resistor divider RS3 and RS4 is used to define a DC voltage threshold 196 at the inverting input of comparator CM1. The 120 Hz, full-wave signal 136 from the voltage regulator circuit 128 is applied to the non-inverting input 192 of comparator CM1 through the resistor divider RS5 and RS6. Resistor RS7 is connected from the output 194 to the non-inverting input 192 of comparator CM1 to provide hysteresis and thereby stabilize transitions of the volt pulse signal 140. A pull-up resistor RS8 is connected to V+ from the output 194 of comparator CM1. Capacitor C4 filters any remaining high frequency noise across the inputs of comparator CM1.

FIG 11*a* graphically illustrates the alternating service voltage V and the main winding current Im of the motor 100. The full-wave signal 136 and DC voltage threshold 196 is shown graphically in FIG. 11*b*. The volt pulse train 140 at the output of comparator CM1 is shown graphically in FIG. 11*c*. The volt pulses occur at two-times the line voltage frequency regardless of whether the motor 100 is ON or OFF. For a 60 Hz source, there are 120 volt pulses per second. As shown in FIGS. 11*a*, 11*b* and 11*c*, the width of each volt pulse may vary according to the amplitude of the line voltage and hence, the full-wave rectified waveform 136, which determines the steepness or slope of the waveform in the vicinity of the zero value. If the line voltage V of FIG. 11*a* and hence, the full-wave waveform 136 of FIG. 11*b* is assumed to be an average or mean waveform which produces the pulses shown in the solid line 198, a line voltage waveform Vh as shown in FIG. 11*a* having a larger than average amplitude will produce a full-wave waveform 200 with a larger than average amplitude and will generate a narrower pulse 202, as shown in broken lines in FIG. 11*c*. And, similarly, a line voltage waveform V1 having a small than average amplitude will produce a full-wave waveform 204 having a smaller amplitude then the waveform 136 and will produce a wider pulse 206, also shown in broken lines in FIG. 11*c*. Three successive voltage pulses V1, V2 and V3 are shown in FIG. 11*c* in relation to the full-wave rectified waveform 136. A continuous series of these volt pulses is supplied to the microcomputer 134 whenever the refuse compactor 10 is connected to the service voltage.

Referring again to FIG. 4, in accordance with Faraday's law of voltage induction, the electromotive force, or voltage, induced across the sense winding 116 is proportional to the rate of change of the magnetic flux of core 114. However, the core 114 quickly saturates immediately following each current zero-crossing of the main winding current in wire 112. Thus, a sharp voltage spike is generated across terminals 120 and 122

of the sense winding **116** whenever the current passing through the motor main winding **102** reverses polarity, or, passes through a zero-crossing. The core **114** generates a train of alternating positive and negative voltage spikes at pulse rate of two-times line frequency. The magnitude and sharpness of each spike is proportional to the rate of change of the current flowing through the primary winding **102** at the zero-crossing. However, it is the timing relationships between the line voltage and motor main winding **102** current zero-crossings which is of interest in the present invention, not the magnitude of the current in the main winding **102**, or, the magnitude of the induced voltage spikes.

The induced voltage spikes for the first three zero-crossings of the current in the main winding **102** are shown in FIG. **11***d* as voltage spikes **S1**, **S2** and **S3**. The current is also shown as a dashed line in FIG. **11***d*. The preferred part for ferrite core **114** in this embodiment is Fair-Rite 43 Shield Bead #2643000801 manufactured by the Fair-Rite Products Corporation in Wallkill, N.Y. The smaller the inside diameter of the core, and, the longer the length dimension of core **114** parallel to the primary winding **112**, the larger the magnitude of the induced voltage across the sense winding **116**. The peak magnitude of the induced voltage spikes **S1**, **S2** and **S3** in FIG. **11***d* is 40 millivolts. The core **114** is preferably located on a printed circuit board near the current pulse circuit **118** and other electronics to avoid the use of connectors with the small sense **116** voltage. However, the core **114** may be alternately located remote from the electronics, say, on or near the motor **100**.

FIG. 7 is a circuit diagram for the current pulse circuit **118** of FIG. **4**. The current pulse circuit receives the ferrite core sense winding voltage signal as an input and provides a brief, current pulse output in response to the current zero-crossings of the motor main winding current. The current pulses occur at twice the service frequency, or, 120 pulses per second for a service frequency of 60 Hz. The unregulated, DC bias voltage from the voltage regulator circuit of FIG. **5** adjusts the sensitivity of the combined sensor and current pulse circuity for the effect of service voltage variation on the motor main winding current.

The current pulse circuit **118** uses two voltage comparators CM2 and CM3 to convert the induced voltage spikes S from the ferrite core sensor **114** to a binary current pulse output signal **135**. Comparator CM2 responds to the positive induced voltage spikes S and comparator CM3 responds to the negative induced voltage spikes. The outputs of comparators CM2 and CM3 form a logical "wired OR" connection such that either comparator is capable of pulling the output **135** to the circuit ground, or logical zero state. More specifically, the output of both comparators CM2 and CM3 is connected to V+ by the pull-up resistor RS13.

The unregulated DC bias voltage **132** from the voltage regulator circuit **126** is applied across the series resistor divider network comprising resistors **RS9**, **RS10**, **RS11** and **RS12**. This has the effect of increasing the sensitivity of both comparators CM2 and CM3 when the line voltage is low and rate of change of the current in the main winding **102** in the vicinity of a current zero-crossing is also low. The preferred circuit thereby compensates the sensitivity of the ferrite core **114** and the current pulse circuit **118** for the effect of service voltage variation on the main winding current. However, resistor **RS9** may also be connected to V+ if such compensation is not desired.

The common connection **208** between resistors **RS9** and **RS10** is connected to the non-inventing input of comparator CM2. The common connection **210** between resistors **RS11** and **RS12** is connected to the inverting input of comparator CM3. The common connection **212** between resistors **RS10** and **RS11** is connected to one end **122** of the ferrite core **114** sense winding **116**. The other end **120** of the sense winding **116** is connected to inverting input of comparator CM2 and the non-inventing input of comparator CM3. Capacitor C7 is wired in parallel with the ferrite core **114** signal **120** and **122** and is used to filter high frequency noise on the ferrite core **114** signal voltage. Much of the high frequency noise originates from service lines L1 and N and is coupled in a capacitive manner from the primary winding **112** to the sense winding **116** of ferrite core **114**.

The use of single-turn windings **112** and **116** on ferrite core **114** minimizes such capacitive coupled noise. A further reduction, or elimination, of this noise could be achieved through the use of a nickel tape-wound core rather than a ferrite core **114** because a nickel tape-wound core has a natural high frequency cutoff. However, the preferred circuit uses a ferrite core **114** for cost considerations.

Resistor **RS14** is wired in parallel with the ferrite core signal **120** and **122** to provide a continuity path which forces the output **135** of the current pulse circuit **118** HIGH in the unlikely event that the sense winding **116** becomes open-circuited, or, that terminals **120** or **122** become disconnected. The control interprets missing current pulses **135** the same as an OPEN motor thermal protector **106**. Hense, a cycle will be aborted in the event that the sensor circuit becomes OPEN. Capacitors C5 and C6 filter any remaining high frequency noise across the inputs of comparators CM2 and CM3, respectively.

When the voltage across inputs **120** and **122** is zero, resistors **RS10** and **RS11** bias comparators CM2 and CM3, respectively, such that both outputs are HIGH and the current pulse is absent. When a positive induced voltage spike S occurs, such that terminal **120** is temporarily positive with respect to terminal **122**, the input voltage exceeds the DC bias voltage across resistor **RS10** of comparator CM2 and comparator CM2 pulls the output **135** of the current pulse circuit **118** LOW. Similarly, when a negative induced voltage spike S occurs, such that terminal **120** is temporarily negative with respect to terminal **122**, the input voltage exceeds the bias voltage across resistor **RS11** of comparator CM3 and comparator CM3 pulls the output **135** of the current pulse circuit **118** LOW. Thus, the current pulse circuit **118** responds to either positive or negative induced voltage spikes from the ferrite core sensor **114**. The output **135** of the current pulse circuit **118** is supplied to the microcomputer **134** as an interrupt to read the present value of the microcomputer timer on the leading edge of a current pulse.

A pulse train of induced ferrite core voltage spikes **S1**, **S2** and **S3** and corresponding current pulses **I1**, **I2** and **I3** are shown graphically in FIG. **11***d* and **11***e*, respectively. It will be apparent to those skilled in the art that a systematic bias could be introduced in the motor phase data from odd or even numbered line half cycles due to component differences between **RS10** and **RS11**, or, between comparators CM2 and CM3. Similarly, a systematic bias could be introduced in the motor phase data due to occasional asymmetry in the positive and

negative half cycles of the service voltage, say, due to a silicon controlled rectifier load, from another appliance, which draws power unevenly from alternate line half cycles. Rather than ignoring this potential bias, or, employing costly component matching techniques, the preferred embodiment eliminates the effect of the above systematic biases through the exclusive use of microcomputer **134** software programs which either use sufficient data memory to make motor phase comparisons without mixing data from odd and even numbered line half cycles, or, make decisions from data which include an equal number of motor phase samples from positive and negative line voltage half cycles.

FIG. **8** is a circuit diagram for the watchdog circuit **142** of FIG. **4**. The watchdog circuit **142** provides a hard-wired RESET signal to the microcomputer **134** whenever the microcomputer fails to echo the volt pulse signal **140** to the watchdog circuit **142** for a preset period of time. The watchdog circuit **142** also resets the microcomputer **134** during the initial powerup period.

More specifically, input **144** to the watchdog circuit **142** is a dedicated status output from the microcomputer **134** which is HIGH whenever the microcomputer is being RESET and LOW at all other times via microcomputer software. All microcomputer outputs including output line **144** are HIGH whenever the microcomputer **134** is RESET. Resistor RS22 is a pullup resistor at the output of comparator CM4 for the RESET signal **148** to the microcomputer. The microcomputer **134** is being RESET when the comparator CM4 output **148** is LOW. Resistor RS19 is a pull-up resistor for the status input **144**. When the microcomputer **134** is being RESET, the status input **144** is HIGH and capacitor C8 charges toward V+ through resistors RS15 and RS19. At all other times the status input **144** is LOW and capacitor C8 is discharging toward circuit ground through RS15. The common connection **214** between resistor RS15 and capacitor C8 is wired to the non-inventing input of comparator CM4 and the cathode of diode D4. The resistor divider RS16 and RS17 defines a DC voltage threshold at the inverting input **216** of comparator CM4. Resistor RS18 is connected from the status input **144** to the inverting input **215** of comparator CM4. Resistor RS18 provides feedback which ensures overall circuit **142** stability when the RESET signal **148** is removed and the microcomputer status input goes from HIGH to LOW. Capacitor C9 is connected from the volt pulse echo input **146** to the anode of diode D4. Resistor RS20 is a pullup resistor for the microcomputer **134** volt pulse echo output **146**. A current path from the connection **218** between capacitor C9 and diode D4 to circuit ground is provided by resistor RS21.

Under normal operating conditions a volt pulse train **140** comprising 120 volt pulses per second is received by the microcomputer **134** and microcomputer software is used to echo the volt pulse **140** to the watchdog circuit **142** via watchdog circuit input **146**. Energy from the positive voltage transition at the trailing edge of each volt pulse echo signal is coupled by capacitor C9 and diode D4 to charge capacitor C8. Should the volt pulse echo signal remain either in the HIGH or the LOW state, capacitor C8 will discharge through resistor RS15 toward circuit ground. When the voltage at the non-inventing input **214** of comparator CM4 drops below the DC threshold voltage at the inverting input **216**, the comparator CM4 output will switch from HIGH to LOW and a RESET signal **148** will be sent to the microcomputer. If the refuse compactor **10** happens to be in a compaction cycle, the cycle will be aborted.

Upon recognizing receipt of a RESET signal, all microcomputer output lines, including the watchdog status input **144**, will go HIGH, and, capacitor C8 will charge toward V+ through resistors RS15 and RS19. Feedback resistor RS18 will provide a somewhat higher DC threshold at the inverting input **75** of comparator CM4. When the capacitor C8 has charged sufficiently to cause the voltage at the non-inventing input **214** of comparator CM4 to exceed the DC threshold at the inverting input **216**, the comparator CM4 output will go LOW, the microcomputer status input **144** to the watchdog circuit **142** will go LOW via microcomputer software, and, microcomputer will be restored to norma operation.

A refuse compaction cycle will begin the next time that the user presses a start button **168**. On initial powerup the status input **144** is HIGH and the comparator CM4 output **148** remains LOW until the capacitor C8 has charged sufficiently to cause the voltage at the non-inventing input **214** to comparator CM4 to exceed the DC threshold at the inverting input **216**. Hence, the microcomputer **134** will be RESET on powerup.

FIG. **9** is a circuit diagram for the TRIAC driver circuit **172** of FIG. **4**. The TRIAC driver circuit **172** uses an optoTRIAC integrated circuit to drive a large, AC motor TRIAC . from a small binary microcomputer output signal while maintaining electrical isolation of the microcomputer circuitry from the service voltage.

More specifically, the preferred circuit uses a MCP 3011 optically isolated TRIAC driver IC which contains a light emitting diode D5 and a small photo-TRIAC **222**. The anode of the light emitting diode D5 is connected to V+ and the cathode of D5 is connected to resistor RS23 which is driven by a binary output from microcomputer **134**. The photoTRIAC **222** is connected from the gate of the motor TRIAC **174**, and, to the second main terminal MT2 of the same motor TRIAC **174** via resistors RS24 and RS25. Capacitor CIO is wired from the common connection **224** of resistors RS24 and RS25 to the hot L1 side of the service voltage. Capacitor C10 provides a snubbing circuit for both the photoTRIAC **222** and the motor TRIAC **174** via resistors RS24 and RS25, respectively. The snubbing circuit limits the rate of change of voltage across both the photoTRIAC **222** and the motor TRIAC **174** and thereby avoids spurious activation of either TRIAC in the absence of light energy from the diode D5. More, specifically, when the binary output from the microcomputer **134** is HIGH, the diode D5 is not forward biased, no light energy passes to the photoTRIAC **222**, the photoTRIAC is OFF or blocking state and the motor TRIAC **174** is not triggered. When the microcomputer **134** binary output is LOW, diode D5 is forward biased, light energy passes from the light emitting diode D5 to the photoTRIAC **222**, the photo-TRIAC is triggered ON, a circuit is completed from the second main terminal MT2 to the gate of the motor TRIAC **174** via resistors RS24 and RS25, and, the motor TRIAC is triggered. TRIAC driver circuit **178** is identical to circuit **172** and is therefore, not shown in the drawing.

FIG. **10** is a circuit diagram for the relay driver circuit **184** of FIG. **4**. The relay driver circuit **184** uses a PNP transistor to drive a DC relay coil from a small binary microcomputer output signal. The relay coil is electrically isolated from the service voltage.

The preferred circuit uses a PNP transistor Q1 inverter to provide sufficient current gain to drive a DC relay coil from the binary microcomputer **134** output signal **182**. More specifically, resistor RS27 is connected from the base of PNP transistor Q1 to V+ and resistor RS26 is connected from the binary microcomputer **134** output **182** to the base of transistor Q1. The emitter of PNP transistor Q1 is directly connected to V+. The collector of transistor Q1 is connected from one end of the DC relay coil **186** and the cathode of diode D6. The anode of diode D6 is connected to circuit ground and the other end of the DC relay coil. Diode D6 is a flyback diode which dissipates the stored magnetic field of the relay coil when the PNP transistor Q1 turns OFF. When the binary microcomputer **134** output line **182** is LOW, sufficient base drive current is provided through resistor RS26 to forward bias transistor Q1, energize the relay coil **186** and close the cycle relay contact **110**. When the binary microcomputer output line **182** is HIGH, transistor Q1 is in the OFF, or blocking, state, the relay coil is not energized and the cycle relay **110** is open.

Although the values of the components shown in FIGS. **5** through **10** may be selected to meet individual circuit requirements in a manner known to those skilled in the art without departing from the inventive concept disclosed herein, an exemplary embodiment of these circuits can be realized wherein the comparators CM1, CM2, CM3 and CM4 are each one-quarter of an LM399 quadruple comparator package, the voltage regulator integrated circuit **128** is a 7805 five volt regulator IC, the TRIAC driver circuits **172** and **178** use MCP3011 optically isolated TRIAC driver integrated circuits and wherein the remaining components have the following values:

COMPONENT	VALUE (OHMS/MICROFARADS)
RS1	1.2K
RS2	1K
RS3	100K
RS4	24K
RS5	10K
RS6	100K
RS7	680K
RS8	5.6K
RS9	10K
RS10	22
RS11	22
RS13	5.6K
RS14	100
RS15	100K
RS16	3.9K
RS17	1K
RS18	10K
RS19	6.8K
RS20	3.3K
RS21	1.5K
RS22	5.6K
RS23	330
RS24	180
RS25	100
RS26	1.5K
RS27	10K
C1	1500
C2	33
C3	0.02
C4	0.0047
C5	0.01
C6	0.01
C7	0.68
C8	0.47
C9	0.15
C10	0.02

Flow charts for a programmed microcomputer are illustrated in FIGS. **12** through **23** which show how the microcomputer **134** may be dedicated during one portion of each line half cycle to monitor timing relationships between the volt and current pulses with crystal controlled clock cycles. Through the speed of the microcomputer, all data processing and/or decision making is completed before the arrival any volt or current pulse information for the next line half cycle. The flow charts also show how the microcomputer **134** processes the motor phase information to detect when the motor **100** has started; establish various average motor torque baselines; monitor motor torque dither, or, the absence of dither; and, detect when the average motor torque has surpassed, or deviated from, an established baseline. Further additional supervisory flow charts for the programmed microcomputer **134** are disclosed which show how these computed parameters may be utilized to automatically control the cycle of a refuse compactor **10** with a split phase induction motor **100**.

FIG. **12** is a flow chart for the MAIN program **300** for a domestic refuse compactor cycle. The MAIN program **300** calls the motor start routine MSR **400**, the DOWN routine **600**, the LOW routine **650** and the UP routine **850**. The MAIN program **300** provides a complete refuse compaction cycle.

More specifically, the MAIN program **300** loops continuously through program decision step **302** until the user presses the start button to initiate a cycle. When a cycle has been initiated, the program falls through decision step **302** to decision step **304** Decision step **304** checks the status of the top limit switch and branches directly to program step **336** if the ram assembly **23** is not in the home position from the most previous cycle. Program steps **336** and **340** then return the ram assembly **32** to the home position in a manner which will be described later. Otherwise, the ram assembly is in the home position, as is normally the case, and the program falls through decision step **304** to program step **306** to begin a normal refuse compaction cycle. Program step **306** calls the motor start routine MSR **400** as a subroutine to start the motor with the ram assembly moving in the down direction to begin a refuse compaction stroke. Program step **306** returns to the MAIN program **300** with the ram assembly **320** moving in the down direction and the motor substantially lightly loaded because actual refuse compaction will not begin until the ram assembly has reached an area of travel on the power screws **44***a* and **44***b* where it actually begins to compact refuse.

The down routine **600** is called by the MAIN program **300** at step **308**. The DOWN routine **600** uses a programmed referencing procedure to sample the unloaded motor **100** torque while the ram assembly is traveling in a free, unhindered manner; computes a motor **100** torque threshold once per each revolution of the power screws **44***a* and **44***b*; and, returns to the MAIN program **300** as soon as the motor torque has shown an increase from the baseline level. The fact that the motor torque has increased from the baseline torque level means that either the ram assembly has begun to compact refuse, or, the ram assembly has bottomed out

against the internal structure of the compactor **10**. Decision step **310** discriminates between ram bottoming and actual refuse compaction by comparing the elapsed time since the ram has cleared the top limit switch in data memory register **R17** to a preset time threshold. If the elapsed cycle time in line half cycles has exceeded 1360 half cycles, or, at 120 half cycles per second, 11.3 seconds, the program branches to step **312** wherein the compaction cycle is aborted regardless of the user cycle selection.

Program step **312** deactivates the cycle relay **110** by driving microcomputer **134** output line **182** HIGH. Program step **314** activates the "no compaction" console LED by driving microcomputer output line **154** LOW. The program then falls into steps **336** and **340** which return the ram assembly to the home position without providing a controlled pause period, and, without providing an opportunity for the user to invoke the "solid pack" cycle. Otherwise, the program falls through decision step **310** to program step **316** which calls the LOW routine **650**. The LOW routine **650** is called with the ram beginning to compact refuse and the motor **100** experiencing a generally increasing load torque. The main winding **102** phase numbers are generally decreasing a the motor torque increases. The LOW routine **650** returns to the MAIN program **300** when the sum of the last two consecutive main winding phase numbers has dropped below a threshold defined previously in the same cycle as part of the motor start procedure via the motor start routine MSR **400**. Decision step **318** advances the cycle to decision step **328** if the user has selected the low compaction force cycle; otherwise, the program falls through to step **320** with the compaction forces building and rapidly approaching the motor breakdown torque.

Program step **320** calls the MEDIUM routine **700**. The MEDIUM routine **700** keeps track of the minimum sum of two consecutive main winding **102** phase numbers. The MEDIUM routine **700** returns to the MAIN program **300** when the sum of the last two main winding phase numbers has exceeded the previous minimum sum of two main winding phase numbers for three consecutive line half cycles. In other words, the MEDIUM routine **700** returns to the MAIN program **300** as soon as the main winding motor phase data has indicated that the refuse compaction load torque has exceeded the available motor **100** breakdown torque. Decision step **322** causes the program to branch to decision step **328** if the user has selected the medium force refuse compaction cycle; otherwise, the user has selected the high compaction force cycle and the program falls through to step **324**. The HIGH routine **750** is called at program step **324**. The HIGH routine **750** achieves additional compaction force in excess of the normal motor **100** main winding **102** breakdown torque by reactivating the down **20** auxiliary winding **104***a* via motor TRIAC **174**. The HIGH routine **750** returns to the MAIN program **300** at decision step **328** as soon as the sum of the last two main winding phase numbers exceeds a threshold defined by the motor start routine MSR **400** earlier in the same cycle. In other words, the HIGH routine **750** returns to the MAIN program **300** after extracting all of the available torque from the motor **100** with both the main winding **102** and the down start winding **104** energized simultaneously; but before the motor **100** has had time to stall or overheat. Decision step **328** interrogates the elapsed time register **R17** to determine whether or not the trash bag is full. In other words, if the compaction portion of the stroke has been completed before the ram assembly **32** has had sufficient time to travel beyond a preset point, it may be assumed that the trash bag is full. Specifically, if the elapsed cycle time in register **R17** is less than **480**, or four seconds, the full trash bag console LED **152** is illuminated in step **330** by driving microcomputer **134** output line **152** LOW. Otherwise, the program falls through to step **332** whereupon both the cycle relay **110** and the down start winding TRAIC **174** are deactivated by driving microcomputer **134** output lines **182** and **170**, respectively, HIGH. Driving microcomputer **134** output line **170** HIGH has no effect on the auxiliary winding **104***a* if output line **170** was already HIGH. The program then calls the PAUSE routine **800** at step **324**.

After completion of a normal refuse compaction stroke, the PAUSE routine **800** provides a preset two second pause period with the ram assembly at the bottom of the stroke. This provides additional refuse compaction time without significantly adding to the total cycle time. The user can invoke the "solid pack" cycle by pressing the start button sometime during the two second pause period. If the "solid pack" cycle is invoked, the the PAUSE routine **800** will not return to the MAIN program **300** until twenty-four additional seconds have elapsed, or, until the user terminates the "solid pack" cycle by again pressing the start button. The MAIN program **300** calls the UP routine **850** at program step **336**. The UP routine **850** starts the motor **100** such that the ram assembly moves in the up direction toward the home, or storage position. The refuse compactor drawer assembly **15** will not open unless the ram assembly is in, or near, the home position. The UP routine **850** returns to the MAIN program **300** at program step **340** when the top limit switch has indicated that the ram has returned to the home position, or, when a stalled motor **100** has been detected. The cycle relay **110** is deactivated at program step **340** by driving microcomputer **134** output line **182** HIGH. The program then loops back to decision step **302** to await user initiation of the next cycle.

FIG. **13** is a flow chart of the phase monitoring routine PMR **350**. The phase monitoring routing PMR **350** is used to monitor the lagging main winding phase angle when the motor **100** is ON, or, to provide a one half line cycle delay when the motor is OFF. The phase monitoring routine PMR **350** may be called as often once per line half cycle, or, 120 times per second for a 60 Hz service frequency. When the motor is ON, the phase monitoring routing PMR **350** returns to the calling program with the last, second last and third last main winding motor phase numbers in data memory registers **R1**, **R2** and **R3**, respectively, and, the sum of the last two main winding motor phase numbers in register **R4**. This information is available for use by the calling routine.

The phase monitoring routine PMR **350** is called by the motor start routing MSR **400**, the trash compaction routine TCR **500** and the UP routine **850** once per line cycle, or, 120 times per second, to use the crystal controlled microcomputer **134** clock to monitor the time from the leading edge of the volt pulse **140** to the leading edge of the current pulse **135**. The phase monitoring routine PMR **350** is also called with the motor **100** OFF by the PAUSE routine **800** to mark time for one line half cycle. More specifically, the phase monitoring routine PMR **350** begins by preparing to accumulate the sum of the last two main winding **102** phase numbers in

register R4 by moving the last main winding phase numbers in register R1 to register R4 at program step 352. Program steps 354 and 356 adjust the data stack of the last three main winding phase numbers by moving the second last phase number in register R2 to register R3 in step 354, and moving the last phase number in register R1 to register R2 at step 356. The phase monitoring routine PMR 350 then loops through decision step 358 until the volt pulse is gone. The purpose of step 358 is to avoid initiating a phase sample in the middle of a volt pulse.

Decision step 360 causes the program to loop until the arrival of the leading edge of the next volt pulse whereupon the program falls through to step 362. The microcomputer 134 timer is started at program step 362. The volt pulse echo line 144 from the microcomputer 134 to the watchdog circuit 142 is driven LOW at program step 364. The program loops through decision step 366 until the volt pulse is gone, whereupon the volt pulse echo line 144 is restored to the HIGH state at program step 368. Decision step 370 causes the program to return to the calling routing at step 372 if the motor 100 is OFF; otherwise, the program falls through to decision seep 374.

The program loops through decision steps 374 and 376 until either a current pulse arrives, or, a preset time limit has expired. The time limit may come into play for a few line half cycles after the coil 186 has been energized, but before the cycle relay contact 110 has made, or, in the event of a motor 100 thermal overload 106 trip. If the time limit expires at decision step 376 before the arrival of a current pulse, the missing current pulse count register R21 is incremented at step 378. Decision step 380 branches from point A at step 382 to point A at step 338 of the MAIN program 300 to abort the present cycle if the missing current pulse count register R21 is ten. In other words, the present cycle is aborted if the motor 100 thermal protector 106 has tripped, or, if there is an open anywhere in the motor 100 circuit which causes the absence of a current pulse 135 for ten consecutive line half cycles. Otherwise decisions step 380 branches to step 386.

Normally, the program falls through decision step 374 to step 384 upon the arrival of the next current pulse 135. At program step 384 the missing current pulse count register R21 is cleared. At step 386 the present value of the timer is read into data memory register R1. This involves both reading the present value of the microcomputer timer and keeping track of the number of timer rollovers, a procedure which is know to those skilled in the art. The microcomputer timer is stopped at step 388. And, the last main winding 102 phase number in register R1 is added to the present value of register R4 in step 390. The program returns to the calling routine at step 392 with the sum of the last two consecutive main winding 102 phase numbers in register R4 and the last, second last and third last main winding phase numbers in registers R1, R2 and R3, respectively. All data processing and decision making by the calling program will be completed before the arrival of the next volt pulse through the speed of the microcomputer 134. The sum of the last two main winding phase numbers in register R4 represents data from one odd and one even numbered line voltage half cycle and thereby tends to cancel the effect of component variation between comparators CM2 and CM3, and, the effects of positive and negative half cycle line voltage asymmetry.

FIG. 14 is a flow chart for the motor start routine MSR 400. The motor start routine MSR 400 calls the phase monitoring routine PMR 350 as a subroutine at six program locations. The motor start routine MSR 400 starts the motor in the ram-up or the ram-down direction depending on the status of the UP flag. The motor start routine MSR 400 uses a programmed referenced technique to monitor a characteristic percentage decrease in the main winding motor phase angle which occurs when the motor has accelerated sufficiently to develop more torque without the auxiliary winding. In addition to starting the motor, the motor start routine MSR 400 samples two motor phase parameters which are available for use at a later time in the same cycle by the LOW routine 650 and the HIGH routine 750 to define specific portions of the compaction stroke.

During motor 100 starting the main winding 102 phase numbers start out large when the speed of the motor 100 is low and decrease in a characteristic manner as the motor 100 comes up to speed. The motor start routine MSR 400 detects when the motor 100 has accelerated to approximately seventy-five percent of synchronous speed by monitoring the maximum sum of two consecutive main winding phase numbers, and, deactivating the auxiliary winding when the sum of the last two motor phase numbers has dropped below a threshold of nine sixteenths of the maximum sum. This threshold has been found to be accurate for the entire production distribution of motors 100, over the widest range of service voltage, and, a variety of motor 100 winding M, S1 and S2 temperatures.

The motor start routine MSR 400 also monitors the sum of two consecutive locked rotor main winding phase numbers just prior to activating the auxiliary winding S1 when the motor 100 is being started in the direction which moves the ram assembly 32 down. The motor start routine MSR 400 is capable of starting the motor 100 in the ram up, or ram down direction in accordance with the UP flag as set by the UP routine 850. More specifically, the motor start routine MSR 400 activates the cycle relay 110 at step 402 by driving microcomputer 134 output line 182 LOW. The program loops through steps 404 and 406 until the cycle relay contacts 110 close. Specifically, step 404 calls the phase monitoring routine PMR 350 and decision step 406 interrogates register R1 to determine whether or not the phase monitoring routine PMR 350 timed out. The program falls through to step 408 when the relay contact 110 has closed and a main winding current pulse has been detected by the phase monitoring routine PMR 350. Program step 408 defines a maximum motor 100 start time of five-sixth of one second by loading register R18 with 100. Decision step 410 branches to step 420 if the UP routine 850 has set the UP flag. Program step 420 activates the auxiliary winding S2 which starts the motor 100 in the direction which brings the ram assembly toward the home position in the up direction.

Otherwise, the program falls through decision step 410 to step 412. Program steps 412, 414 and 416 sample the sum of two consecutive motor 100 locked rotor main winding 102 phase numbers and store the result in register R9. This parameter will be used later by the LOW routine 650 to define a motor 100 phase threshold to terminate the low force compaction cycle. Specifically, step 412 calls the phase monitoring routine PMR 350 a first time to load register R1 with a locked rotor, or zero RPM, main winding phase number. Step 414

calls the phase monitoring routing PMR **350** a second time to load register R4 with the sum of two consecutive lock rotor main winding **16** phase numbers. Step **416** moves the sum of the last two main winding phase numbers in register R4 to register R9 for later use by the LOW routine **650**. Program step **418** activates the auxiliary winding **104***a* which starts the motor **100** in the direction which moves the ram assembly **32** down for refuse compaction. Program steps **422** and **424** call the phase monitoring routine PMR **350** a first and second time with the auxiliary winding ON to accumulate good data in memory registers R1, R2 and R4. The maximum sum of the two motor phase numbers in register R10 is initialized to a low value at program step **426**.

Program steps **428** through **440** define a criterion which uses a characteristic decrease in main winding phase angle as the split phase induction motor **100** accelerates to determine the appropriate time to deactivate the auxiliary winding **104***a* or **104***b*. Specifically, program step **428** calls the phase monitoring routine PMR **350**. The phase monitoring routine PMR **350** returns to the motor start routine MSR **400** with the sum of the last two consecutive main winding phase numbers in register R4. The motor start time limit in register R18 is decremented at step **430**, and, decision step **432** determines Whether the motor **100** has failed to start within the allotted time limit. If register R18 has decremented to zero, the program branches from point A at step **449** of the motor start routine MSR **400** to point A at step **338** of the MAIN program **300** to abort the present cycle regardless of the position of the ram assembly **32**. Otherwise, the program falls through decision step **432** to decision step **434**.

Program steps **434** and **436** store the maximum sum of two consecutive main winding phase numbers throughout the motor **100** start procedure in register R10. This number is used to define a motor start threshold, and, a threshold for terminating the high compaction force cycle by the HIGH routine **750**. Specifically, decision step **434** branches to step **438** if the sum of the last two main winding phase numbers is not a new maximum sum. Of, if the sum of the last two consecutive main winding phase numbers in register R4 is greater than the previous maximum sum of two consecutive main winding phase numbers in register R10, the program falls through to step **436** wherein the new maximum sum is stored in register R10. Note that the program always falls through to step **436** on the first pass because register R10 was cleared at step **426**.

Program step **438** computes the motor start threshold in register R20 by a procedure that is known to those skilled in the art. Division by any multiple of two and multiplication by successive additions are within the capability of most 8-bit microcomputers **134**. In fact, the preferred microcomputer, the Texas Instrument TMS7020, employs a specific multiply instruction. Specifically, the value in register R10 is moved to register R20. The value of register R20 is divided by two, four times. And, the value in register R20 is added to itself eight more times so that the resulting value in register R20 is approximately nine-sixteenths of the value in register R10. If the sum of the last two main winding **16** phase numbers in register R4 is less than the motor start threshold in register R20, the motor **100** has started.

Specifically, decision step **440** loops back to step **428** for the next main winding phase sample if the sum of the last two main winding phase numbers is not less than the motor start threshold in register R20. Otherwise, the program falls through decision step **440** to step **442** to terminate the motor **100** start procedure. Program step **442** turns both TRIACs **174** and **180** OFF. The TRIAC **174** or **180** which is already OFF is unaffected by step **442**. Program steps **444** and **446** load motor **100** stall detection parameters which, in conjunction with the STALL routine **450**, provide an independent means of detecting a stalled motor **100** throughout the compaction stroke, and, while the ram assembly **32** is being returned to the home position. Specifically, the stall sum of differences threshold register R7 is loaded with forty at step **444**, and, the stall comparison count threshold register R8 is loaded with forty at step **446**. The program returns to the calling routine with the motor **100** started at step **448**.

FIG. **15** is a flow chart for the STALL routine **450**. The STALL routine is called by the trash compaction routine TCR **500** and the UP routine **850** once per each line half cycle to provide a means of detecting a stalled motor via a lack of variation in the main winding motor **100** phase samples.

It should be noted that there is no such thing as an absolutely constant motor **100** torque in the trash compactor **10**, or, in any other major appliance induction drive motor, when the motor is operating in a normal manner. Hence, if the main winding phase numbers become relatively constant, it can be inferred that the motor **100** has stalled. It is necessary, however, to avoid comparing data from consecutive main winding phase samples because positive and negative half cycle line voltage asymmetry, or, component variation between comparators CM2 and CM3 can introduce sufficient apparent variation in the data as to prevent detection of a stalled motor. The STALL routine **450** accumulates the absolute value of the difference between the last and the third last main winding phase number in register R5 for a sample period defined by the value in the stall comparison count threshold register R8. The calling routine determines whether or not the motor **100** is stalled by comparing the sum of differences in register R5 to the stall sum of difference threshold in register R7. The values of the stall sum of difference threshold in register R7 and the stall comparison count threshold in register R8 are defined by the motor start routine MSR **400** and altered to a more sensitive threshold by the HIGH routine **750**. The sum of differences in register R5 and, the stall comparison count in register R6 are cleared by the stall routine upon the completion of each sample; i.e., when a determination has been made that the motor **100** is not stalled.

More specifically, the STALL routine **450** subtracts the last main winding phase number in register R1 from the third last main winding phase number in register R3 in step **452**. The absolute value of the difference in register R3 is added to the sum of differences register R5 in step **454**. The stall comparison count register R6 is incremented at step **456**. Decision step **45** returns to the calling program at step **460** if the sum of differences in register R5 is not greater than the stall sum of differences threshold in register R7. Otherwise, the motor is not stalled and the program falls through to steps **462** and **464** to re-initiate the stall detection parameters for a new sample. Specifically, the sum of differences register R5 is cleared at step **462**, and, the stall comparison count register R6 is cleared at step **464**. The program returns to the calling routine at step **466**. The motor **100** is not stalled and a new sample will begin with the next pass through the STALL routine **450**.

FIG. 16 is a flow chart for the trash compaction routine TCR 500. The trash compaction routine TCR 500 is called once per line half cycle or 120 times per second, by the DOWN routine 600, the LOW routine 650, the MEDIUM routine 700 and the HIGH routine 750 to provide the common program steps required by each routine. The trash compaction routine TCR 500 calls the phase monitoring routine PMR 350; aborts the cycle if the user has re-pressed the start button; calls the STALL routine 450, and, aborts the cycle if a stalled motor condition is detected; aborts the compaction stroke if the tilt switch trips; aborts the cycle if an overall time limit has expired; and, aborts the compaction stroke if the drawer is open. Otherwise, the trash compaction routine TCR 500 returns to the calling routine with new motor phase information available in data memory registers R1, R2, R3 and R4.

The trash compaction routine TCR 500 calls the phase monitoring routine PMR 350 at step 502. Decision step 504 aborts the present cycle by transferring program control from point A at step 505 to point A at step 338 of the MAIN program 300 in the event that the user has pressed the start button and driven the start button input 168 LOW. In other words, the start button becomes a stop button, or, panic button, during the compaction stroke or during ram assembly 32 return to the home position. Otherwise, the program falls through decision step 504 to step 506. The STALL routine 450 is called at step 506. Decision step 508 aborts the compaction stroke if the STALL routine 450 returns to the trash compaction routine TCR 500 with the stall comparison count in register R6 equal to the stall comparison count threshold in register R8. In other words, if the sum of differences between the last and the third last main winding phase numbers in register R5 is still below the stall sum of differences threshold in register R7 over a sufficient sample period, the motor 100 is stalled and the program branches from point B at step 509 to point B at step 326 of the MAIN program 300 to force completion of the present compaction stroke. Decision step 510 aborts the present cycle if the tilt switch 162 trips during a compaction stroke by branching from point A at step 512 to point A at step 338 of the MAIN program 300. Otherwise, the elapsed time register R17 is incremented at step 514. Decision step 516 defines a maximum time limit for the compaction stroke by branching from point B at step 518 to point B at step 326 of the MAIN program 300 if the elapsed cycle time exceeds 1440, or, twelve seconds. Decision step 520 aborts the present cycle if the drawer switch 160 trips during a compaction stroke by branching from point A at step 522 to point A at step 338 of the MAIN program 300. Otherwise, the program returns to the calling routine at step 524 with the sum of the last two main winding phase numbers in register R4, and, the last, second last and third last main winding phase numbers in registers R1, R2 and R3, respectively, and, the elapsed cycle time register R17 incremented.

FIG. 17 is a flow chart for the revolution routine REV 550. The revolution routine REV 550 is called once per line half cycle or 120 times per second, by the DOWN routine 600 to facilitate detection of an increase in motor torque at the actual onset of refuse compaction or ram bottoming. The revolution routine REV 550 accumulates successive sums of motor phase numbers for a sample time approximately corresponding to one revolution of the drive screws 44*a* and 44*b*. The results are used to compute a minimum torque baseline value for use by the DOWN routine 600.

The revolution sample sum register R13 and the drive screw revolution sample time register R19 have been cleared by the DOWN routine 600 prior to the first calling of the revolution routine REV 550. More specifically, the revolution routine REV 550 adds the last main winding phase number in register R1 to a revolution sample sum register R13 at program step 552. The drive screw revolution sample time register R19 is incremented at step 554. Decision step 556 returns to the DOWN routine 600 at step 558 if the sample is incomplete. Otherwise, the present sample is complete and the program falls through decision step 556 to step 560 whereupon the sum of the last sixteen main winding phase numbers in register R13 is divided by eight. This can b accomplished by dividing the value in register R13 by two, three times. The result of this division is a ram bottom threshold number representing the average motor 100 torque for a single revolution of the drive screws 44*a* and 44*b*. Program steps 462 and 464 store the maximum ram bottom threshold number in register R11. Specifically, decision step 462 branches to step 466 if the last threshold number in register R13 is not greater than the previous maximum ram bottom threshold number in register R11. If the threshold in register R13 is not a new maximum, program step 562 branches directly to step 566. Otherwise, the program falls through decision step 562 to step 564 and the new maximum threshold number in register R13 is moved to register R11. Program steps 566 and 568 prepare to sample the motor torque for the next revolution of the drive screws 44*a* and 44*b*. Specifically, the revolution sample sum in register R13 is cleared at step 566, and, the drive screw revolution sample time in register R19 is cleared at step 568. The program returns to the DOWN routine 600 at step 570 with a ram bottom threshold in register R11 available for use by the DOWN routine 600.

A flow chart for the DOWN routine 600 is shown in FIG. 18. The DOWN routine 600 is called by the MAIN program 300 after the motor 100 is started with the ram assembly 32 moving in the down, or refuse compaction, direction. The DOWN routine 600 calls the trash compaction routine TCR 500 and the revolution routine REV 550 one per each line half cycle, or, 120 times per second. The DOWN routine compares the sum of the last two consecutive main winding 102 phase numbers in register R4 to a ram bottom threshold in register R11 provided by the revolution routine REV 550 to provide rapid detection of the transition from free, unhindered travel of the ram assembly 32 to the onset of actual refuse compaction, or, ram bottoming. The DOWN routine 600 returns to the MAIN program 300 at the start of the actual refuse compaction portion of the stroke, with the motor 100 load torque increasing and the main winding phase numbers decreasing.

More specifically, the DOWN routine 600 clears the revolution sample sum register R13 at step 602, and, the drive screw revolution sample time register R19 at step 604 prior to the first calling of the revolution routine REV 550. The elapsed cycle time register R17 is cleared at step 606. The ram bottom threshold register R11 is cleared at program step 608. The trash compaction routine TCR 500 is called at step 610. The trash compaction routine TCR 500 returns to the DOWN routine with the sum of the last two consecutive main winding phase numbers in register R4 and the elapsed

cycle time register R17 incremented. The revolution routine REV 500 is called at step 612. The revolution routine REV 550 accumulates sums of sixteen consecutive main winding phase numbers representing the torque required to turn the drive screws 44*a* and 44*b* through approximately one revolution and computes a ram bottom threshold in register R11. Decision step 614 branches back to step 606 until the ram assembly 32 has cleared the top limit switch 158. The top limit switch 158 is very accurately positioned at the time of manufacture. The elapsed cycle time in register R17 is used to determine the position of the ram assembly 32 by the MAIN program 300 to determine if the ram assembly 32 is about to bottom-out, or, if the trash bag is full. Hence, clearing the elapsed cycle time in register R17 at program step 606 until the ram assembly 32 has cleared the top limit switch 158 facilitates an accurate means of inferring the ram position. If the ram assembly 32 has cleared the top limit switch 158, the program falls through decision step 614 to decision step 616. Decision step 616 branches back to step 608 to clear the ram bottom threshold in register R11 for the first portion of the stroke because the initial main winding phase numbers are biased while the motor 100 may still be coming up to full speed.

After the motor 100 has been running for a sufficient time to be fully accelerated, the program falls through decision step 616 to program step 618, wherein a fixed bias number is added to the sum of the last two main winding phase numbers in register R4. Decision step 620 returns to the MAIN program 300 at step 622 if the biased sum of the last two consecutive main winding phase numbers in register R4 is less than the ram bottom threshold in register R11. The compaction forces are increasing and the main winding phase numbers are decreasing. The motor 100 is operating just to the right of point 72 on the speed-torque curve of FIG. 3. Otherwise, the program falls through decision step 620 to step 610 wherein the trash compaction routine TCR 500 is called to obtain the next main winding phase sample.

A flow chart for the LOW routine 650 is shown in FIG. 19. The LOW routine 650 is called by the MAIN program 300 in the low, medium and high compaction force cycles immediately after the DOWN routine 600 has determined that the refuse compaction portion of the stroke has started. The LOW routine 650 computes a main winding 102 phase threshold in register R9 from a locked rotor, or low RPM, main winding phase sample acquired by the motor start routine MSR 400 at the start of the present cycle. The LOW routine 650 calls the trash compaction routine TCR 500 once per each line half cycle, or, 120 times per second, and compares the sum of the last two main winding 16 phase numbers in resister R4 to the threshold in register R9. The LOW routine 650 returns to the MAIN program 300 as soon as the compaction force exceeds the threshold and with the motor 100 torque just beginning to approach the breakdown torque region of the motor 100 speed-torque curve. The main program terminates the compaction stroke at this point if the low compaction force cycle is active; otherwise, the main program calls the MEDIUM routine 700.

More specifically, the LOW routine 650 subtracts a fixed bias number from the sum of two consecutive locked rotor main winding 102 phase numbers in register R9 at program step 652. The trash compaction routine TCR 500 is called at step 654. The trash compaction routine TCR 500 returns to the LOW routine 650 with the sum of the last two consecutive main winding phase numbers in register R4. Decision step 656 branches back to step 654 if the sum of the last two consecutive main winding phase numbers in register R4 is not less than the threshold number in register R9. Otherwise, the motor 100 torque is greater than the low force threshold and the program falls through decision step 656 to step 658. The program returns to the MAIN program 300 at step 658 with motor 100 operating approximately at point 80 of the speed-torque curve on FIG. 9.

A flow chart for the MEDIUM routine 700 is shown in FIG. 20. The MEDIUM routine 700 is called by the MAIN program 300 for the medium and high compaction force cycles to detect when the required load torque has increased to a point just beyond the available motor 100 breakdown torque. The MEDIUM routine 700 calls the trash compaction routine TCR 500 once per each line half cycle, or, 120 times per second for as long as the motor 100 torque is increasing, and, returns to the MAIN program 700 as soon as three consecutive line half cycles have occurred with no new minimum sum of the last two consecutive main winding 102 phase numbers. The MAIN program 300 terminates the compaction stroke at this point if the medium cycle is active; otherwise, the MAIN program 300 calls the HIGH routine 750.

More specifically, the MEDIUM routine 700 moves the sum of the last two consecutive main winding phase numbers in register R4 to the minimum sum of two consecutive main winding phase numbers in register R12 at program step 702. The breakdown count register R16 is cleared at step 704. The trash compaction routine TCR 500 is called at step 706. The trash compaction routine TCR 500 returns to the MEDIUM routine 700 with the sum of the last two main winding phase numbers in register R4. Decision step 708 branches back to step 702 if the motor 100 torque is still increasing. Specifically, decision step 708 branches back to step 702 if the sum of the last two main winding phase numbers in register R4 is less than the previous minimum sum of the last two main winding phase numbers in register R12. Otherwise, the program falls through decision step 708 to step 710 wherein the breakdown count in register R16 is incremented. Decision step 712 branches back to step 706 if the breakdown count is less than three. Otherwise, the motor 100 load torque has exceeded the main winding breakdown torque. In other words, three consecutive line half cycles have occurred with no new minimum sum of two consecutive main winding phase numbers. The program falls through decision step 712 and returns to the MAIN program 300 at step 714 with the motor operating approximately at point 78 of the motor speed-torque curve of FIG. 3.

A flow chart for the HIGH routine 750 is shown in FIG. 21. The HIGH routine 750 is called by the MAIN program 300 for the high compaction force cycle with the load torque having just exceeded the available main winding 102 breakdown torque. The HIGH routine 750 provides additional motor 100 torque by re-activating the ram down auxiliary winding 104*a*. The main winding phase numbers abruptly shift to a low value and begin to increase with decreasing motor 100 RPM as the load torque increases. The HIGH routine 750 returns to the MAIN program 300 when the sum of the last two main winding phase numbers in register R4 exceeds a threshold referenced from the maximum sum of two consecutive main winding phase numbers as

monitored at the start of the present cycle by the motor start routine MSR 400. The HIGH routine 750 also defines a time limit to protect the auxiliary winding 104*a*. The compaction stroke is then terminated by the MAIN program 300.

More specifically, the HIGH routine 750 activates the down auxiliary winding 104*a* TRIAC 174 at step 752 by driving microcomputer 134 output line 170 LOW. The STALL routine 450 threshold parameters are reset for increased sensitivity and steps 754 and 756. Specifically, the stall sum of difference threshold in register R7 is changed from forty to twenty at step 754, and, the stall comparison count threshold in register R8 is changed from forty to twenty at step 756. The trash compaction routine TCR 500 is called three successive times at steps 758, 780 and 782 to establish good data in the sum of two consecutive main winding phase number register R4 with the auxiliary winding 104*a* energized. A fixed bias is subtracted from the maximum sum of two consecutive main winding phase numbers during motor 100 starting in register RIO to define the threshold for termination of the high force compaction stroke. The start time limit of 2.75 seconds is defined at step 756 by loading 330 at register R18. A stall count register R15 is cleared at step 768. The trash compaction routine TCR 500 is called at step 770.

The trash compaction routine TCR 500 returns with the sum of the last two main winding phase numbers with the auxiliary winding 104*a* ON in register R4. The start winding time limit register R18 is decremented at step 772, and, decision step 774 returns to the MAIN program 300 at step 776 if the time limit has expired. Otherwise, the program falls through decision step 774 to decision step 778. Decision step 778 loops back to step 770 for the next main winding phase sample if the sum of the last two consecutive main winding phase numbers in register R4 is less than the threshold in register R10. Otherwise, the program falls through decision step 778 to step 780. The stall count register R15 is incremented in register R15 at step 780, and, decision step 782 loops back to step 770 for the next main winding 102 phase sample if the stall count in register R4 is less than four. Otherwise, the motor 100 speed has slowed sufficiently so that no further compaction will be achieved on this stroke, and, the program returns to the MAIN program 300 at step 784. The motor 100 is operating at approximately point 68 of the speed-torque curve of FIG. 3.

A flow chart for the PAUSE routine 800 is shown in FIG. 22. The PAUSE routine 800 is called by the MAIN program 300 with the ram assembly 32 at the bottom of the stroke. The PAUSE routine 800 calls the phase monitoring routine PMR 350 once per each line half cycle, or, 120 times per second, with the motor 100 OFF, to time out a two-second pause period with the ram assembly 32 compacting refuse to prolong the compaction period. The PAUSE routine 800 extends the pause period to twenty-five seconds if the user presses the start button 168 during the original two-second pause period. And, the PAUSE routine 800 aborts the remaining portion of the extended pause period if the user presses the start button during the extended pause period. The PAUSE routine 800 returns to the MAIN program 300 with the ram assembly 32 at the bottom of the stroke ready to be returned to the home, or storage, position.

More specifically, the PAUSE routine 800 loads the pause loop count register R14 with 240 for a two-second pause period at step 802. The phase monitoring routine PMR 350 is called with the motor 100 OFF at step 804. Decision step 806 branches to decision step 814 if the user presses the start button to activate the extended pause, or solid pack, cycle. Otherwise, the program falls through decision step 806 to step 808 wherein the pause loop count in register R14 is decremented. Decision step 810 loops back to step 804 unless the pause loop count register R14 has been decremented to zero whereupon the program returns to the MAIN program 300 at step 812. If the start button 168 is pressed sometime during the original two-second pause period, the program branches to decision step 814 which loops back upon itself until the user releases the start button 168 When the user releases the start button 168, the program falls through decision step 814 to step 816 The pause loop count in register R14 is loaded with 3000 for a twenty-five second pause at step 816. The phase monitoring routine PMR 350 is called with the motor 100 OFF at step 818. The pause loop count in register R14 is decremented at step 820, and, decision step 822 returns the program to the MAIN program 300 via program step 824 if the pause loop count in register R14 has been decremented to zero. Otherwise, the program falls through to decision step 826 which returns the program to the main program via step 828 if the user has terminated the extended pause, or solid pack, cycle by pressing the start button sometime during the twenty-five second period. Otherwise, the program loops back to step 818.

A flow chart for the UP routine 850 is shown in FIG. 23. The UP routine is called by the MAIN program 300 to return the ram assembly 32 to the home position The UP routine 850 calls the motor start routine MSR 400 with the UP flag set to start the motor 100 in the ram up direction. The UP routine 850 then calls the phase monitoring routine PMR 350 and the STALL routine 250 once per each line half cycle, or, 120 times per second. The present cycle is terminated when the ram assembly 32 reaches the home, or storage, position and trips the top limit switch 158.

More specifically, the UP routine 850 sets the UP flag in microcomputer 134 data memory at step 852. The motor start routine MSR 400 is called at step 854 to start the motor in the ram up direction. The phase monitoring routine PMR 350 is called at step 856, and, the STALL routine 450 is called at step 858. If the STALL routine 450 returns with the stall comparison count in register R6 equal to the stall comparison count threshold in register R8, the motor 100 has stalled and decision step 860 aborts the present cycle by returning to the MAIN program 300 at step 862. Otherwise, the motor 100 is not stalled and the program falls through decision step 860 to decision step 864. Decision step 864 aborts the present cycle by returning to the MAIN program 300 via step 866 if the user has pressed the start button 168. Otherwise, the program falls through decision step 864 to decision step 868. Decision step 868 branches back to step 856 for the next main winding phase sample if the top limit switch input 158 is LOW. Otherwise, the ram assembly 32 has return to the home position and tripped the top limit switch whereupon the program is returned to the MAIN program 300 at step 870. The MAIN program 300 deactivates the cycle relay 110 by driving microcomputer 134 output line 182 HIGH to terminate the present cycle. The MAIN program 300 then awaits the start of the next cycle by monitoring the start switch input 168.

A listing of the microcomputer **40** data memory registers is shown below for use with the preferred Texas Instruments TMS7020 microcomputer **134** while this microcomputer has an 8-bit word size, to avoid unnecessary complication of the preceding flow charts, it has been assumed that the data memory registers have a 16-bit word size capability. Those who are skilled in the art will know how to include the necessary additional steps to achieve double precision, when necessary, with two 8-bit data memory registers. And, those who are skilled in the art will recognize opportunities to combine data memory registers which are not used concurrently.

DATA MEMORY ALLOCATION	
R1	LAST MAIN WINDING 16 PHASE NUMBER
R2	SECOND LAST MAIN WINDING 16 PHASE NUMBER
R3	THIRD LAST MAIN WINDING 16 PHASE NUMBER
R4	SUM OF THE LAST TWO CONSECUTIVE MAIN WINDING 16 PHASE NUMBERS
R5	LAST/THIRD LAST ABSOLUTE SUM OF DIFFERENCES
R6	STALL COMPARISON COUNT
R7	STALL SUM OF DIFFERENCES THRESHOLD
R8	STALL COMPARISON COUNT THRESHOLD
R9	SUM OF TWO MAIN WINDING 16 LOCKED ROTOR PHASE NUMBERS
R10	MAXIMUM SUM OF TWO START NUMBERS
R11	RAM BOTTOM THRESHOLD
R12	MINIMUM SUM OF TWO MAIN WINDING 16 PHASE NUMBERS
R13	REVOLUTION SAMPLE SUM
R14	PAUSE LOOP COUNT
R15	STALL COUNT
R16	BREAKDOWN COUNT
R17	ELAPSED CYCLE TIME
R18	START WINDING TIME LIMIT
R19	DRIVE SCREW REVOLUTION SAMPLE TIME
R20	MOTOR START THRESHOLD
R21	MISSING CURRENT PULSE COUNT

It should be noted that prior art compactors required a centrifugal switch which detected motor speed and switched off the secondary winching in response to the speed increasing above predetermined levels. The centrifugal switch also detects when the speed decreases below a certain level, as occurs during refuse compaction and activates the reverse start winding to cause the retraction of the ram assembly. The preferred embodiment eliminates the centrifugal switch for improved motor control in the region of the motor speed-torque curve of FIG. **3** near the breakdown torque. While the motor phase monitoring technique of the present invention facilitates complete elimination of the motor centrifugal switch or start relay, it will be appreciated by those skilled in the art that a traditional motor centrifugal switch or start relay could be retained and used in conjunction with a TRIAC on motor winding **104***a* without departure from the spirit of the invention.

In summary, the operator of the refuse compactor **10** selects HIGH, MEDIUM or LOW force on the cycle selector **28** and then actuates the start button **30**. Or, alternatively, the operator may initiate a cycle and select HIGH, MEDIUM or LOW anytime before the start of actual trash compaction. The ferrite core **114** acts as a sensor, sampling the lagging phase angle of the motor main winding current throughout the refuse compaction stroke. As described above, the phase samples begin to decrease at the onset of actual refuse compaction and continue to decrease until the load torque exceeds the motor breakdown torque, at which time the phase samples begin to increase.

If the LOW force has been selected, the main program **300** terminates the stroke as soon as the phase samples fall below a threshold defined at the start of the cycle by a locked rotor main winding phase sample acquired prior to starting the motor.

If MEDIUM force has been selected, the main program terminates the stroke as soon as compaction forces exceed the main winding breakdown torque. The medium force cycle corresponds to the torque, and therefore the compaction, achieved by prior compactor designs.

If HIGH force has been selected, the main program **300** reactivates the start winding or auxiliary winding **104** at the time of maximum compaction, thereby achieving approximately twenty percent more compaction force than prior compactors using the same motor **100**.

The control of the present invention also provides additional features at no extra manufacturing cost as a result of additional programing steps. The control detects the absence of compaction as well as a full bag condition since the control can determine the time when compaction occurs.

It will be appreciated by those skilled in the art that the techniques, circuitry, and logic described above may be used in whole or in part to control other types of motors, or to control appliances other than a trash compactor. For example, the control logic may be used to determine when any similar motor **100** is stalling and, if desired, increase, stop, or reverse the torque output of the motor.

The above constitutes a detailed description of the best mode contemplated by the inventor, at the time of filing, for carrying out the present invention. Variations and modifications from these details will be apparent to hose skilled in the art and such variations and modifications are included within the intended scope of the claims appended hereto.

I claim:

1. An apparatus for determining the onset of stalling of a motor having a start winding and a run winding selectively energized by a line voltage alternating at a predetermined frequency, said apparatus comprising:

means for measuring the lagging phase angle of said run winding during energization of said run winding, wherein said means for measuring the lagging phase angle of said run winding during energization of said run winding further comprises:

transformer means comprising a transformer winding having at least one turn of said run winding of said motor, said transformer providing a voltage signal;

a current pulse circuit responsive to said voltage signal and providing a current pulse output in response to zero crossings of said motor winding;

a volt pulse circuit responsive to said line voltage to provide a volt pulse output corresponding to said line frequency; and

calculator means response to said current pulse output and said volt pulse output to calculate said lagging phase angle;

means for storing said measurements of said phase angle; and

means for comparing two or more of said stored phase angle measurements such as to detect a

change in said measurements characteristic of the onset of stall of said motor.

2. The motor control of claim 1 further comprising means for energizing said start winding in response to a predetermined change in said phase angle measurement indicative of the onset of stall in said motor.

3. The apparatus of claim 1 wherein said means for storing and said means for comparing both comprise said calculator means.

4. The apparatus of claim 1 further comprising watchdog means for resetting said calculator means whenever said calculator means fails to echo said volt pulse signal for a predetermined period of time.

5. The apparatus of claim 1 further comprising voltage regulator means for supplying an unregulated DC bias voltage to said current pulse circuit and for supplying a full wave rectified voltage to said volt pulse circuit, said unregulated DC voltage adjusting the sensitivity of said current pulse circuit for the effect of line voltage variation on said run winding.

6. The apparatus of claim 1 further comprising:

means for halting said motor for a predetermined period of time in response to detection of the onset of stall of said motor; and

means for reversing said motor after said predetermined time period has passed.

7. The apparatus for determining the onset of stalling of a motor of claim 1 further comprising means for controlling the operation of said motor in response to said phase angle measurements such as to provide a predetermined torque output at the time of maximum loading on said motor, said means for controlling comprising said means for energizing said start winding.

8. The apparatus of claim 7 wherein said means for controlling the operation of said motor further comprises:

calculator means, responsive to said phase angle measurements from said means for comparing to generate a motor control signal upon detection of a predetermined change in said measurement characteristic of the onset of stall in said motor; and

power switching means for controlling the supply of power to at least one of said motor windings in response to said motor control signal.

9. The apparatus of claim 1 wherein said means for comparing detects the onset of stall by detecting a characteristic decrease in average motor phase angle.

10. The apparatus of claim 1 further comprising:

timing means for measuring the duration of operation of said motor prior to the detection of the onset of stall by said means for comparing; and

signal means responsive to said timing means for generating a signal indicative of said duration.

11. The apparatus of claim 1 further comprising:

timing means for measuring the duration of operation of said motor prior to the detection of the onset of stall by said means for comparing; and

signal means responsive to said timing means for generating a signal indicative of a no-load condition if said duration exceeds a predetermined maximum period of time.

12. The apparatus of claim 1 further comprising:

timing means for measuring the duration of operation of said motor prior to the detection of the onset of stall by said means for comparing; and

signal means responsive to said timing means for generating a signal indicative of a maximum load condition if said duration is less than a predetermined maximum period of time.

13. The apparatus for determining the onset of stalling of a motor of claim 1 further comprising:

means for controlling the operation of said motor in response to said phase angle measurements such as to provide a predetermined torque output at the time of maximum loading on said motor.

14. A motor control for a split phase inductance drive motor having a start winding and a run winding, said motor control comprising:

means for intermittently measuring the phase angle of said run winding during energization of said run winding; and

means for controlling the operation of said motor in response to said phase angle measurements such as to provide a predetermined torque output at the time of maximum loading on said motor, wherein said means for controlling the operation of said motor in response to a predetermined change in said phase angle measurement compares the most recent phase angle measurement with a locked rotor phase angle measurement and discontinues supply of current to said main winding when said most recent measurement is approximately equal to said locked rotor measurement.

15. The motor control of claim 14 wherein said means for controlling the operation of said motor in response to a predetermined change in said phase angle measurement further comprises:

means comparing the most recent motor phase angle measurement with the previous minimum motor phase measurement; and

means discontinuing supply of current to said main winding when said most recent motor phase angle measurement is larger than said previous minimum motor phase measurement.

16. The apparatus of claim 15 wherein said means for controlling said motor in response to said phase angle measurement comprises:

first control means for providing a first predetermined maximum torque level upon the detection of the onset of stalling of said motor;

second control means for providing a second predetermined maximum torque level upon the detection of the onset of stalling of said motor; and

selector means for selecting said first or said second control means.

17. The apparatus of claim 16 wherein:

said first control means comprises means for energizing said start winding in response to a predetermined change in said phase angle measurement indicative of the onset of stall; and

said second control means comprises comparison means for comparing the most recent phase angle measurement with a locked rotor phase angle measurement and discontinues supply of current to said main winding when said most recent measurement is approximately equal to said locked rotor measurement.

18. The apparatus of claim 16 wherein:

said first control means comprises means for energizing said start winding in response to a predetermined change in said phase angle measurement indicative of the onset of stall; and

said second control means comprises means for comparing the most recent phase angle measurement with a retained minimum phase angle measurement

and discontinues supply of current to said main winding when said most recent measurement is significantly greater than said retained minimum phase angle measurement.

19. The motor control of claim 14 further comprising:
means for storing said measurements of said phase angle;
means for comparing two or more of said stored phase angle measurements; and
means for energizing said start winding in response to a predetermined change in said phase angle measurement indicative of the onset of stall in said motor.

20. The motor control of claim 14 wherein said means for controlling said motor further comprises:
means for halting said motor for a predetermined period of time in response to detection of the onset of stall of said motor; and
means for reversing said motor after said predetermined time period has passed.

21. The motor control of claim 14 further comprising means for selecting between two maximum torque levels for said motor; said motor control means being responsive to said selection means such as to provide a preselected maximum torque level upon detection of the onset of stall of said motor.

22. The motor control of claim 14 further comprising:
emergency stop signal means for signalling that an emergency condition exists;
means for instantaneously stopping said motor in response to actuation of said emergency stop signal means;
release signal means; and
means for reversing said motor in response to actuation of said release signal means.

23. The motor control of claim 14 further comprising means for selecting between two maximum torque levels for said motor, said motor control means being responsive to said selection means such as to activate said start winding at said time of maximum loading for one of said two maximum torque levels and said motor control means being responsive to said selection means such as to deactivate said run winding at said time of maximum loading for the other of said two maximum torque levels.

24. The motor control of claim 22 further comprising:
manually operable start means for starting said motor, said emergency stop signal means and said release signal means both consisting of said start means; and
control means responsive to said start means for energizing said motor such as to start said motor, said control means stopping said motor in response to said start means if said motor is already operating and said control means reversing said motor if said motor has been prematurely stopped by said control means.

25. The motor control of claim 14 wherein said means for controlling the operation of said motor further comprises:
calculator means, responsive to said phase angle measurements from said means, for measuring and for comparing at least two of said phase angle measurements and generating a motor control signal upon detection of a predetermined change in said measurement characteristic of the onset of stalling said motor; and
power switching means for controlling the supply of power to at least one of said motor windings in response to said motor control signal.

26. The motor control of claim 14 wherein said means for controlling the operation of said motor further comprises:
calculator means, responsive to said phase angle measurements from said means, for measuring and for comparing at least two of said phase angle measurements and selectively generating a first motor control signal upon detection of a first predetermined change in said measurement characteristic of the onset of stall in said motor selectively generating a second motor control signal upon detection of a second predetermined change in said measurement characteristic of the onset of stall in said motor;
first power switching means for discontinuing the supply of power to said run winding in response to said first motor control signal; and
second power switching means for initiating the supply of power to said start winding in response to said first motor control signal.

27. The motor control of claim 14 wherein said means for measuring the phase angle of said run winding during energization of said run winding further comprises:
transformer means comprising a transformer winding having at least one turn of said run winding of said motor, said transformer providing a voltage signal;
a current pulse circuit responsive to said voltage signal and providing a current pulse output in response to zero crossings of said motor winding;
a volt pulse circuit responsive to said line voltage to provide a volt pulse output corresponding to said line frequency; and
calculator means responsive to said current pulse output and said volt pulse output to calculate said phase angle.

28. The apparatus of claim 14 further comprising:
timing means for measuring the duration of operation of said motor prior to the detection of the onset of stall by said means for comparing; and
signal means responsive to said timing means for generating a signal indicative of said duration.

29. The apparatus of claim 14 further comprising:
timing means for measuring the duration of operation of said motor prior to the detection of the onset of stall by said means for comparing; and
signal means responsive to said timing means for generating a signal indicative of a no-load condition if said duration exceeds a predetermined maximum period of time.

30. The apparatus of claim 14 further comprising:
timing means for measuring the duration of operation of said motor prior to the detection of the onset of stall by said means for comparing; and
signal means responsive to said timing means for generating a signal indicative of a maximum load condition if said duration is less than a predetermined maximum period of time.

31. A motor control for a split phase inductance drive motor having a start winding and a run winding, said motor control comprising:
means for intermittently measuring the phase angle of said run winding during energization of said run winding; and
means for controlling the operation of said motor in response to said phase angle measurements such as

to provide a predetermined torque output at the time of maximum loading on said motor;

means for selecting between two maximum torque levels for said motor; said motor control means being responsive to said selection means such as to provide a preselected maximum torque level upon detection of the onset of stall of said motor.

32. The motor control of claim **31** wherein said motor control means is responsive to said selection means such as to activate said start winding at said time of maximum loading for one of said two maximum torque levels and said motor control means is further responsive to said selection means such as to deactivate said run winding at said time of maximum loading for the other of said two maximum torque levels.

33. The motor control of claim **31** wherein said means for controlling the operation of said motor in response to a predetermined change in said phase angle measurement further comprises:

means comparing the most recent motor phase angle measurement with the previous minimum motor phase measurement; and

means discontinuing supply of current to said main winding when said most recent motor phase angle measurement is larger than said previous minimum motor phase measurement.

34. The motor control of claim **31** further comprising:

emergency stop signal means for signalling that an emergency condition exists;

means for instantaneously stopping said motor in response to actuation of said emergency stop signal means;

release signal means; and

means for reversing said motor in response to actuation of said release signal means.

35. The motor control of claim **34** further comprising:

manually operable start means for starting said motor, said emergency stop signal means and said release signal means both consisting of said start means; and

control means responsive to said start means for energizing said motor such as to start said motor, said control means stopping said motor in response to said start means if said motor is already operating and said control means reversing said motor if said motor has been prematurely stopped by said control means.

36. The motor control of claim **31** wherein said means for controlling the operation of said motor further comprises:

calculator means, responsive to said phase angle measurements from said means, for measuring and for comparing at least two of said phase angle measurements and generating a motor control signal upon detection of a predetermined change in said measurement characteristic of the onset of stall in said motor; and

power switching means for controlling the supply of power to at least one of said motor windings in response to said motor control signal.

37. The motor control of claim **31** wherein said means for controlling the operation of said motor further comprises:

calculator means, responsive to said phase angle measurements from said means, for measuring and for comparing at least two of said phase angle measurements and selectively generating a first motor control signal upon detection of a first predetermined change in said measurement characteristic of the onset of stall in said motor selectively generating a second motor control signal upon detection of a second predetermined change in said measurement characteristic of the onset of stall in said motor;

first power switching means for discontinuing the supply of power to said run winding in response to said first motor control signal; and

second power switching means for initiating the supply of power to said start winding in response to said first motor control signal.

38. The motor control of claim **37** wherein said means for measuring the phase angle of said run winding during energization of said run winding further comprises:

transformer means comprising a transformer winding having at least one turn of said run winding of said motor, said transformer providing a voltage signal;

a current pulse circuit responsive to said voltage signal and providing a current pulse output in response to zero crossings of said motor winding;

a volt pulse circuit responsive to said line voltage to provide a volt pulse output corresponding to said lien frequency; and

calculator means responsive to said current pulse output and said volt pulse output to calculate said phase angle.

39. The apparatus of claim **31** further comprising:

timing means for measuring the duration of operation of said motor prior to the detection of the onset of stall by said means for comparing; and

signal means responsive to said timing means for generating a signal indicative of said duration.

40. The apparatus of claim **31** further comprising:

timing means for measuring the duration of operation of said motor prior to the detection of the onset of stall by said means for comparing; and

signal means responsive to said timing means for generating a signal indicative of a no-load condition if said duration exceeds a predetermined maximum period of time.

41. The apparatus of claim **31** further comprising:

timing means for measuring the duration of operation of said motor prior to the detection of the onset of stall by said means for comparing; and

signal means responsive to said timing means for generating a signal indicative of a maximum load condition if said duration is less than a predetermined maximum period of time.

42. A motor control for a split phase inductance drive motor having a start winding and a run winding, said motor control comprising:

means for intermittently measuring the phase angle of said run winding during energization of said run winding; and

means for controlling the operation of said motor in response to said phase angle measurements such as to provide a predetermined torque output at the time of maximum loading on said motor, wherein said means for controlling the operation of said motor in response to a predetermined change in said phase angle measurement compares the most recent motor phase angle measurement with the previous minimum motor phase measurement and discontinues supply of current to said main winding when said most recent motor phase angle measurement is larger than said previous minimum motor phase measurement.

43. The motor control of claim 42 wherein said means for controlling said motor further comprises:
means for halting said motor for a predetermined period of time in response to detection of the onset of stall of said motor; and
means for reversing said motor after said predetermined time period has passed.

44. The motor control of claim 42 further comprising:
emergency stop signal means for signalling that an emergency condition exists;
means for instantaneously stopping said motor in response to actuation of said emergency stop signal means;
release signal means; and
means for reversing said motor in response to actuation of said release signal means.

45. The motor control of claim 42 further comprising means for selecting between two maximum torque levels for said motor, said motor control means being responsive to said selection means such as to activate said start winding at said time of maximum loading for one of said tow maximum torque levels and said motor control means being responsive to said selection means such as to deactivate said run winding at said time of maximum loading for the other of said two maximum torque levels.

46. The motor control of claim 44 further comprising;
manually operable start means for starting said motor, said emergency stop signal means and said release signal means both consisting of said start means; and
control means responsive to said start means for energizing said motor such as to start said motor, said control means stopping said motor in response to said start means if said motor is already operating and said control means reversing said motor if said motor has been prematurely stopped by said control means.

47. The motor control of claim 42 wherein said means for controlling the operation of said motor further comprises:
calculator means, responsive to said phase angle measurements from said means, for measuring and for comparing at least two of said phase angle measurements and generating a motor control signal upon detection of a predetermined change in said measurement characteristic of the onset of stall in said motor; and
power switching means for controlling the supply of power to at least one of said motor windings in response to said motor control signal.

48. The motor control of claim 42 wherein said means for controlling the operation of said motor further comprises:
calculator means, responsive to said phase angle measurements from said means, for measuring and for comparing at least two of said phase angle measurements and selectively generating a first motor control signal upon detection of a first predetermined change in said measurement characteristic of the onset of stall in said motor selectively generating a second motor control signal upon detection of a second predetermined change in said measurement characteristic of the onset of stall in said motor;
first power switching means for discontinuing the supply of power to said run winding in response to said first motor control signal; and
second power switching means for initiating the supply of power to said start winding in response to said first motor control signal.

49. The motor control of claim 42 wherein said means for measuring the phase angle of said run winding during energization of said run winding further comprises:
transformer means comprising a transformer winding having at least one turn of said run winding of said motor, said transformer providing a voltage signal;
a current pulse circuit responsive to said voltage signal and providing a current pulse output in response to zero crossings if said motor winding;
a volt pulse circuit responsive to said line voltage to provide a volt pulse output corresponding to said line frequency; and
calculator means responsive to said current pulse output and said volt pulse output to calculate said phase angle.

50. The apparatus of claim 42 further comprising:
timing means for measuring the duration of operation of said motor prior to the detection of the onset of stall by said means for comparing; and
signal means responsive to said timing means for generating a signal indicative of said duration.

51. The apparatus of claim 42 further comprising:
timing means for measuring the duration of operation of said motor prior to the detection of the onset of stall by said means for comparing; and
signal means responsive to said timing means for generating a signal indicative of a no-load condition if said duration exceeds a predetermined maximum period of time.

52. The apparatus of claim 42 further comprising:
timing means for measuring the duration of operation of said motor prior to the detection of the onset of stall by said means for comparing; and
signal means responsive to said timing means for generating a signal indicative of a maximum load condition if said duration is less than a predetermined maximum period of time.

53. A motor control for a split phase inductance drive motor having a start winding and a run winding selectively energized by a line voltage alternating at a predetermined frequency, said motor control comprising:
means for intermittently measuring the phase angle of said run winding during energization of said run winding, and
means for controlling the operation of said motor in response to said phase angle measurements such as to provide a predetermined non-zero torque output at the time of maximum loading on said motor,
wherein said means for intermittently measuring the phase angle of said run winding during energization of said run winding further comprises:
transformer means comprising a transformer winding having at least one turn of said run winding of said motor, said transformer providing a voltage signal;
a current pulse circuit responsive to said voltage signal and providing a current pulse output in response to zero crossings of said motor winding;
a volt pulse circuit responsive to said line voltage to provide a volt pulse output corresponding to said line frequency; and
calculator means responsive to said current pulse output and said volt pulse output to calculate said phase angle.

54. The motor control of claim 53 wherein said means for storing and said means for comparing both comprise said calculator means.

55. The motor control of claim 53 further comprising watchdog means for resetting said calculator means whenever said calculator means fails to echo said volt pulse signal for a predetermined period of time.

56. The motor control of claim 53 further comprising voltage regulator means for supplying an unregulated DC bias voltage to said current pulse circuit and for supplying a full wave rectified voltage to said volt pulse circuit, said unregulated DC voltage adjusting the sensitivity of said current pulse circuit for the effect of line voltage variation on said run winding.

57. The motor control of claim 53 wherein said means for controlling said motor further comprises:

means for halting said motor for a predetermined period of time in response to detection of the onset of stall of said motor; and

means for reversing said motor after said predetermined time period has passed.

58. An apparatus for determining the onset of stalling of a motor having a start winding and a run winding selectively energized by a line voltage alternating at a predetermined frequency, said apparatus comprising:

means for measuring the phase angle of said run winding during energization of said run winding;

means for storing said measurements of said phase angle;

means for comparing two or more of said stored phase angle measurements such as to detect a change in said measurements characteristic of the onset of stall of said motor;

means for energizing said start winding in response to a predetermined change in said phase angle measurement indicative of the onset of stall in said motor;

first control means for providing a first predetermined maximum torque level upon the detection of the onset of stalling of said motor;

second control means for providing a second predetermined maximum torque level upon the detection of the onset of stalling of said motor; and

selector means for selecting said first or said second control means.

59. The apparatus of claim 58 wherein said means for measuring the phase angle of said run winding during energization of said run winding comprises a ferrite core transformer having a primary winding including at least one turn of said main winding of said motor.

60. The apparatus of claim 58 wherein said means for comparing detects the onset of stall by detecting a characteristic decrease in average motor phase angle.

61. The apparatus of claim 58 further comprising:

timing means for measuring the duration of operation of said motor prior to the detection of the onset of stall by said means for comparing; and

signal means responsive to said timing means for generating a signal indicative of said duration.

62. The apparatus of claim 58 further comprising:

timing means for measuring the duration of operation of said motor prior to the detection of the onset of stall by said means for comparing; and

signal means responsive to said timing means for generating a signal indicative of a no-load condition if said duration exceeds a predetermined maximum period of time.

63. The apparatus of claim 58 further comprising:

timing means for measuring the duration of operation of said motor prior to the detection of the onset of stall by said means for comparing; and

signal means responsive to said timing means for generating a signal indicative of a maximum load condition if said duration is less than a predetermined maximum period of time.

64. A method of controlling a motor having a start winding and a run winding, said motor control method comprising the steps of:

measuring the phase angle of said run winding during energization of said run winding; and

storing said measurements of said phase angle;

comparing two or more of said stored phase angle measurements; and

controlling the operation of said motor in response to a predetermined change in said phase angle measurement indicative of the onset of stall in said motor; said step of controlling the operation of said motor further comprising:

comparing the most recent phase angle measurement with a locked rotor phase angle measurement; and

discontinuing supply of current to said main winding when said most recent measurement is approximately equal to said locked rotor measurement.

65. The motor control method of claim 64 wherein said step of controlling the operation of said motor comprises energizing said start winding in response to a predetermined change in said phase angle measurement indicative of the onset of stall in said motor.

66. The motor control method of claim 64 wherein said step of controlling the operation of said motor comprises energizing said start winding in response to a predetermined change in said phase angle measurement indicative of the onset of stall in said motor.

67. The motor control method of claim 64 wherein said step of controlling the operation of said motor comprises controlling the duration of operation of said motor in response to said predetermined change in said phase angle measurement.

68. The motor control method of claim 64 wherein:

said step of storing said measurements of said phase angle further comprises continuously storing and updating the minimum phase angle during the current operational cycle;

said step of comparing two or more of said stored phase angle measurements further comprises comparing a phase angle measurement measured by said step of measuring with the minimum previous phase angle measurement during the current operational cycle; and

said step of controlling the operation of said motor in response to a predetermined change in said phase angle measurement comprises discontinuing supply of current to said main winding when said most recent measurement is significantly greater than said minimum phase angle measurement for a predetermined period of time.

69. The method of claim 64 wherein said motor is the drive motor of a refuse compactor having a refuse receptacle, ram means reciprocable into and out of said refuse receptacle, and a drive assembly interconnecting said motor with said ram assembly such that said ram assembly is selectively driven into and out of said refuse receptacle by operation of said motor, said predetermined change in phase angle indicative of the onset of

stall of said motor being further indicative of the onset of compaction of said motor.

70. The control method of claim 69 further comprising the steps of:

timing the duration of operation of said motor prior to the onset of compacting; and

determining the volume of refuse in said refuse receptacle form said duration of operation.

71. The control method of claim 69 further comprising the step of indicating the detection of a full refuse receptacle upon the detection of the onset of stalling of said motor prior to a predetermined period of time.

72. The control method of claim 69 further comprising the steps of:

timing the duration of operation of said motor prior to the onset of compacting;

determining the volume of refuse in said refuse receptacle from said duration of operation;

indicating the detection of a no-load condition, upon the failure of to detect the onset of stalling of said motor after a first predetermined period of time; and

indicating the detection of a full refuse receptacle upon the detection of the onset of stalling of said motor prior to a second predetermined period of time.

73. The method of claim 64 further comprising the step of indicating the detection of a no-load condition, upon the failure to detect the onset of stalling of said motor after a predetermined period of time.

74. A method of controlling a motor having a start winding and a run winding, said motor control method comprising the steps of:

measuring the phase angle of said run winding during energization of said run winding; and

storing said measurements of said phase angle;

comparing two or more of said stored phase angle measurements; and

controlling the operation of said motor in response to a predetermined change in said phase angle measurement indicative of the onset of stall in said motor;

detecting the onset of compaction of refuse in said refuse receptacle;

increasing the torque of said motor in response to the detection of the onset of compaction;

wherein said motor has a run winding and wherein said step of increasing the torque of said motor in response to the detection of the onset of compaction comprises temporarily activating the start winding upon detection of the onset of compaction.

75. A method of controlling a motor having a start winding and a run winding, said motor control method comprising the steps of:

measuring the phase angle of said run winding during energization of said run winding; and

storing said measurements of said phase angle;

comparing two or more of said stored phase angle measurements; and

controlling the operation of said motor in response to a predetermined change in said phase angle measurement indicative of the onset of stall in said motor;

detecting the onset of compaction of refuse in said refuse receptacle;

increasing the torque of said motor in response to the detection of the onset of compaction;

wherein said motor has a run winding having a characteristic speed-torque curve and wherein the phase angle of said run winding is dynamically indicative of the location of the motor along said cure during operation of said motor, said step of detecting the onset of compaction comprising:

measuring the phase angle of said run winding;

storing said phase angle measurements;

comparing said stored phase angle measurements to determine a predetermined change in said phase angle indicative of the onset of stall of said motor.

76. A method of controlling a method having a start winding and a run winding, said motor control method comprising the steps of:

measuring the phase angle of said run winding during energization of said run winding; and

storing said measurements of said phase angle;

comparing two or more of said stored phase angle measurements; and

controlling the operation of said motor in response to a predetermined change in said phase angle measurement indicative of the onset of stall in said motor;

detecting the onset of compaction of refuse in said refuse receptacle;

increasing the torque of said motor in response to the detection of the onset of compaction;

maintaining said ram means in a fixed position within said refuse receptacle for a predetermined period of time after said motor has stalled; and

driving said ram means out of said refuse receptacle after said predetermined period of time.

77. An apparatus for determining the onset of stalling of a motor having a start winding and a run winding selectively energized by a line voltage alternating at a predetermined frequency, said apparatus comprising:

means for measuring the phase angle of said run winding during energization of said run winding;

means for storing said measurements of said phase angle;

means for comparing two or more of said stored phase angle measurements such as to detect a change in said measurements characteristic of the onset of stall of said motor;

means for energizing said start winding in response to a predetermined change in said phase angle measurement indicative of the onset of stall in said motor;

timing means for measuring the duration of operation of said motor prior to the detection of the onset of stall by said means for comparing;

first signal means responsive to said timing means for generating a signal indicative of said duration;

second signal means responsive to said timing means for generating a signal indicative of a no-load condition if said duration exceeds a predetermined maximum period of time; and

third signal means responsive to said timing means for generating a signal indicative of a maximum load condition if said duration is less than a predetermined maximum period of time.

78. The apparatus of claim 77 wherein said means for comparing detects the onset of stall by detecting a characteristic decrease in average motor phase angle.

79. The apparatus of claim 77 wherein said means for measuring the angle of said run winding during energization of said run winding comprises a ferrite core transformer having a primary winding including at least one turn of said main winding of said motor.

* * * * *