March 9, 1965 J. A. MOORE 3,172,517

CLUTCH AND DEFINITE POSITION STOP FOR WIRE WRAPPING TOOL

Filed Nov. 22, 1961

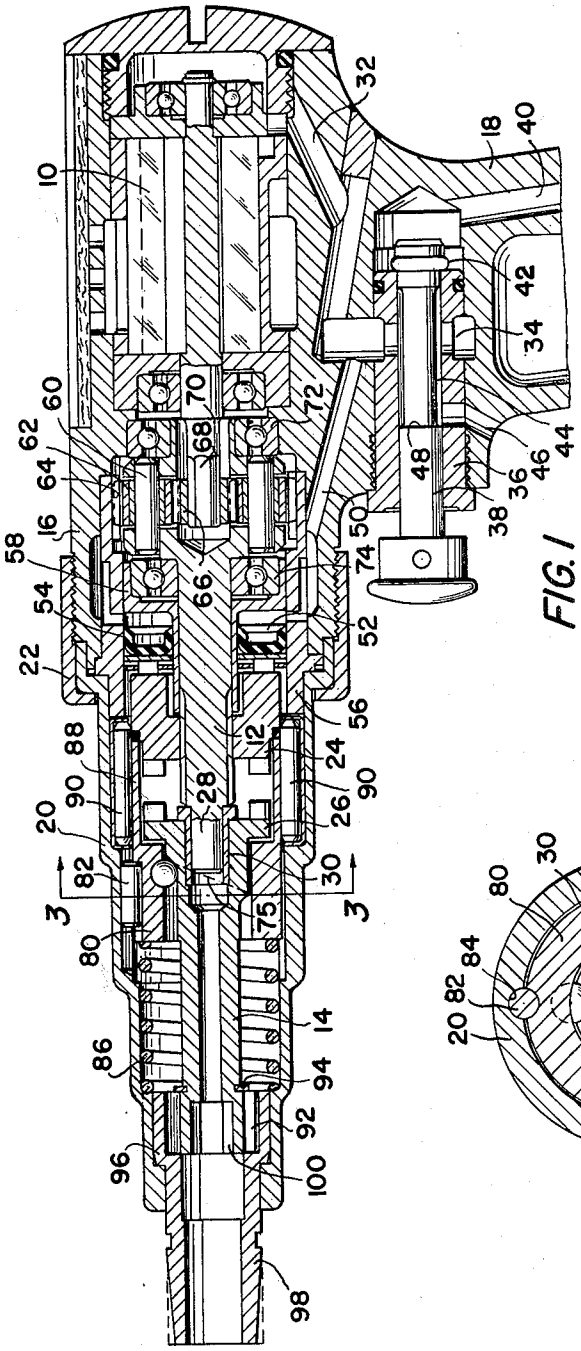

FIG. 1

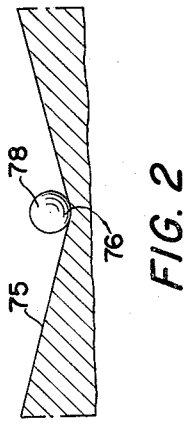

FIG. 2

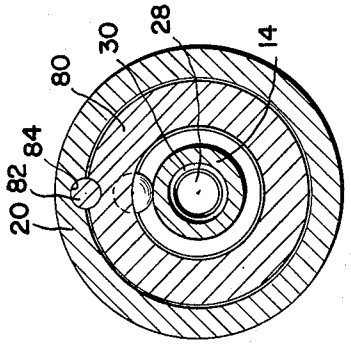

FIG. 3

INVENTOR
JOHN A. MOORE
BY
Arthur Golnick
HIS ATTORNEY

United States Patent Office 3,172,517 Patented Mar. 9, 1965

3,172,517

CLUTCH AND DEFINITE POSITION STOP FOR WIRE WRAPPING TOOL

John A. Moore, South Montrose, Pa., assignor to Ingersoll-Rand Company, New York, N.Y., a corporation of New Jersey

Filed Nov. 22, 1961, Ser. No. 165,707
1 Claim. (Cl. 192—148)

This invention relates to rotary power tools, and more particularly to a power tool intended to be operated intermittently.

It is an object of this invention to provide such a tool of which the spindle will automatically return to a given position when brought to rest.

This is particularly desirable in certain applications where the work to be engaged is initially in the same position or where such an initial position facilitates the application to the work.

A specific case where this is specially desirable is that of wirewrapping for electrical connections. In such an application the end of the wire to be connected to a suitable lug is inserted into the end of the tool and then very tightly wound around the lug to be gripped thereby. A tool for this purpose is provided with a hole into which the end of the wire is inserted initially. Much time is saved if the hole is found in some predetermined position. By this invention there is provided means which, upon stoppage of the driving motor of the tool automatically, brings the spindle of the tool to the same position each time.

Other objects and advantages of the invention will be in part obvious and in part pointed out hereinafter.

In the drawing,

FIGURE 1 is a longitudinal section of a wire wrapping tool embodying the invention in a preferred form;

FIG. 2 is a developed section of the cam elements for restoring the spindle; and

FIG. 3 is a transverse section along the line 3—3 of FIG. 1 looking in the direction of the arrows.

Referring to the drawing, the wire wrapping tool includes an air motor 10 adapted to drive a shaft 12 which is in turn arranged to rotate a spindle 14 for engagement with a suitable wire engaging member (not shown). These elements are in alignment with each other and housed within a casing which includes the motor housing 16 integrally formed with the handle 18 and the shaft and spindle housing portion 20 coupled to housing 16 by means of a retainer 22.

Shaft 12 is adapted to be coupled to spindle 14 by means of a clutch which includes the sliding clutch member 24 splined to rotate with the splined end of shaft 12 and to permit longitudinal motion with respect thereto. A stationary clutch member 26 is formed, in this instance, integrally with the inner end of spindle 14 and journaled on the pilot end 28 of shaft 12, a flanged bearing bushing 30 being provided to prevent wear and to act as a thrust bearing to prevent endwise motion of spindle 14. Clutch members 24 and 26 are of the crown clutch type to provide positive engagement therebetween. The tool is shown as an air operated instrument, motor 10 being of the vane type to which air is introduced by way of a supply passage 32 leading to a port 34 in a throttle valve bushing 36 for which the valve 38 controls the supply of air from a passage 40 connected with a suitable source of supply (not shown). Throttle valve 38 is of the plunger type and has an end valve head 42 controlling flow of air into a central bore 44 communicating with port 34. With the valve 38 in an "off" position as shown, any air in the tool is permitted to exhaust to atmosphere through a discharge port 46 which is uncovered by shoulder 48 on

the valve stem 38. Simultaneously with admission of air to motor 10, air is admitted by way of a port 50 to a chamber 52 containing a cup leather 54 mounted on the rear end of clutch member 24. A working cylinder for cup leather 54 is formed by a bushing 56 held stationary within casing portion 16 and a stepped bushing 58 in the end of bushing 56 and forming a sleeve about shaft 12.

In this instance, the speed of air motor 10 is reduced for driving shaft 12 by suitable planetary gearing. In this instance the rear end of shaft 12 is in the form of a spider and carries bearing pins 60 for planetary gears 62 meshing with teeth 64 formed internally in the end of bushing 56. The sun gear 66 is carried on the octagonal end 68 of rotor shaft 70 of motor 10. The spider end of shaft 12 is provided with anti-friction bearings 72 and 74.

As has been said above it is desirable that when clutch members 24 and 26 are disengaged spindle 14 should return to a predetermined angular position within housing 20. For this purpose cam means is provided which is inoperative while the tool is in rotating condition but which will be engaged to produce this restoring action to spindle 14 when rotation of the drive shaft 12 ceases. To this end, a single lobe track is formed on spindle 14 at the rear of clutch member 26 as shown at the dotted line 75. The development of this cam surface is shown in FIG. 2 to have a bottom point 76 at which normally a ball 78 will rest. Ball 78 is the cam follower element and is carried by a ball holder 80 encircling spindle 14 and adapted to move axially with respect to spindle 14 but not rotatively. Ball holder 80 is held against such rotation by a dowel 82 slidable with ball holder 80 and provided with a groove 84 in the wall of housing 20. Coil spring 86 encircling spindle 14 presses against ball holder 80 and thus tends to push ball 78 against the track 75 which causes stem 14 to rotate to bring the low point 76 in registry with ball 78.

In order to prevent ball holder 80 from oscillating at each revolution of spindle 14, clutch member 24 is adapted to push ball holder 80 forward so as to disengage the cam elements. For this purpose ball holder 80 has a rearward sleeve like extension 88 for contact with clutch member 24. Another function of sleeve portion 88 is to hold suitable bearing rollers 90 in position to act as a bearing for the outer face of clutch member 24 as it is pressed forward into its engaging position with clutch member 26.

At its forward end spindle 14 is provided with roller bearings 92 held in place by a keeper 94 on spindle 14 and rotatable in a race 96 formed in the tool receiving nose 98 through which the wire wrapping implement is inserted for engagement with the hexagonal aperture 100 formed in the end of spindle 14.

In operation the tool is started by manipulation of valve 38 which introduces motive fluid by way of port 32 to air motor 10 to start rotation of shaft 12. Simultaneously, air is admitted to port 50 to chamber 52 forcing clutch member 24 forwardly for engagement with clutch member 26 thereupon transmitting rotation of spindle 14. As clutch member 24 advances it pushes against the sleeve portion 88 of ball holder 80 advancing ball 78 out of range of the cam track 75 against the pressure of spring 86. When the wrapping of the wire is concluded to the satisfaction of the operator, release of valve 38 exhausts air from motor 10 and chamber 52 to release clutch member 24 which is then returned by the force of spring 86 pressing against ball holder 80, and simultaneously the action of the ball 78 on track 75 will rotate spindle 14 to the position of ball 78 at the bottom point 76 of track 75. Thus spindle 14 will always return to the predetermined position.

Thus by the above construction are accomplished among others the objects hereinbefore referred to.

I claim:

A rotary power tool comprising:

(*a*) a housing;

(*b*) a motor disposed in said housing;

(*c*) a shaft disposed in said housing driven by said motor;

(*d*) a tool engaging spindle disposed in said housing adjacent to said shaft;

(*e*) a first clutch element disposed on said spindle;

(*f*) a second clutch element slidable longitudinally on said shaft to engage the first clutch element and to transmit rotation from said shaft to said spindle;

(*g*) a single lobe track disposed on said first clutch element, said single lobe track having a low point;

(*h*) a ball holder in said housing slidably disposed in said housing and encircling said spindle;

(*i*) means disposed between said spindle and said housing to prevent rotation of said ball holder and to guide for longitudinal motion of said ball holder in said housing;

(*j*) a ball disposed on said ball holder and engageable with said track, said ball normally resting on said low point of said track when said first clutch element and said second clutch element are disengaged;

(*k*) a spring disposed in said casing encircling said spindle to press against said ball holder to push said ball against said lobe track to rotate said spindle to bring said low point in registry with said ball to orient said spindle in the same position when said spindle is at rest; and

(*l*) said ball holder having a portion engageable by said second clutch element when said second clutch element engages said first clutch element to push said ball holder away from said track to disengage said ball from said track.

References Cited by the Examiner

UNITED STATES PATENTS

2,147,531	2/39	Heath	192—148
2,151,832	3/39	Bugatti	74—569
2,633,220	3/53	Chase	192—148
2,649,121	8/53	Reck	140—122
2,743,502	5/56	Reck	140—122
2,883,865	4/59	Lyman	74—569
2,884,685	5/59	Bos et al.	

DAVID J. WILLIAMOWSKY, *Primary Examiner.*

THOMAS J. HICKEY, *Examiner.*