Dec. 22, 1964 G. E. GROSSNICKLE 3,162,275

RAILWAY CAR TRUCK LINK

Filed March 15, 1962 4 Sheets-Sheet 1

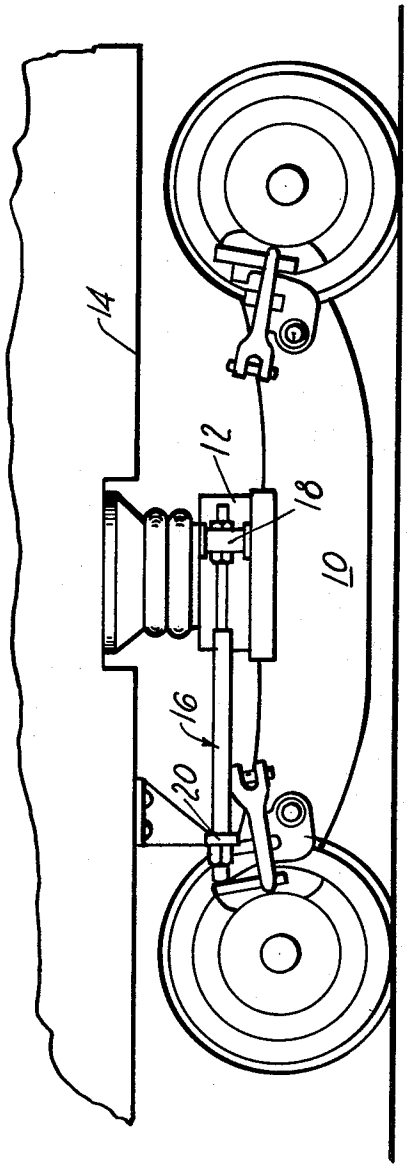

Fig. 1

INVENTOR.
GAROLD E. GROSSNICKLE
BY Cecil & Arenz
ATTORNEY

Dec. 22, 1964 G. E. GROSSNICKLE 3,162,275

RAILWAY CAR TRUCK LINK

Filed March 15, 1962 4 Sheets-Sheet 2

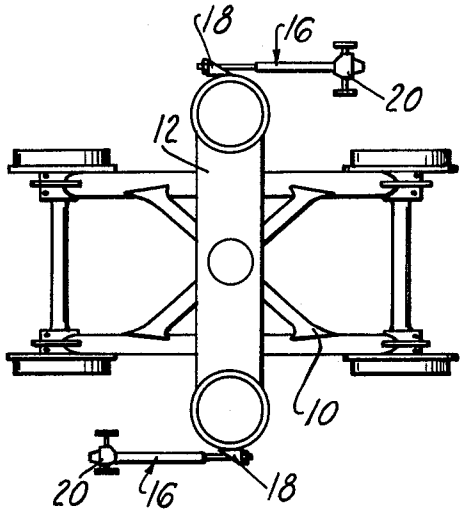

Fig. 2

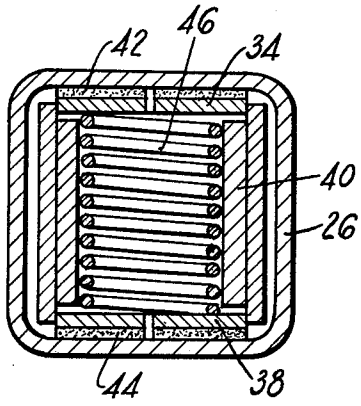

Fig. 4

INVENTOR.
GAROLD E. GROSSNICKLE
BY
Cecil F. Arens
ATTORNEY

Dec. 22, 1964 G. E. GROSSNICKLE 3,162,275

RAILWAY CAR TRUCK LINK

Filed March 15, 1962 4 Sheets-Sheet 3

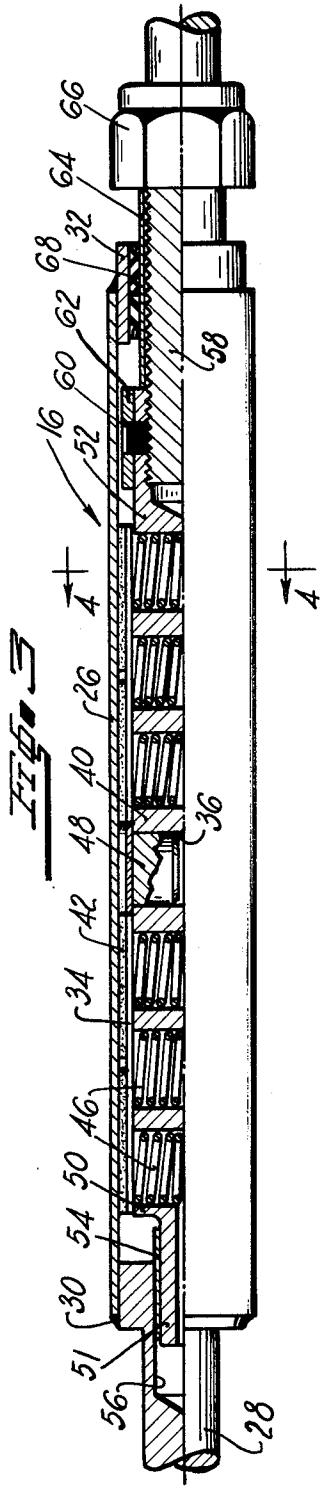

Fig. 3

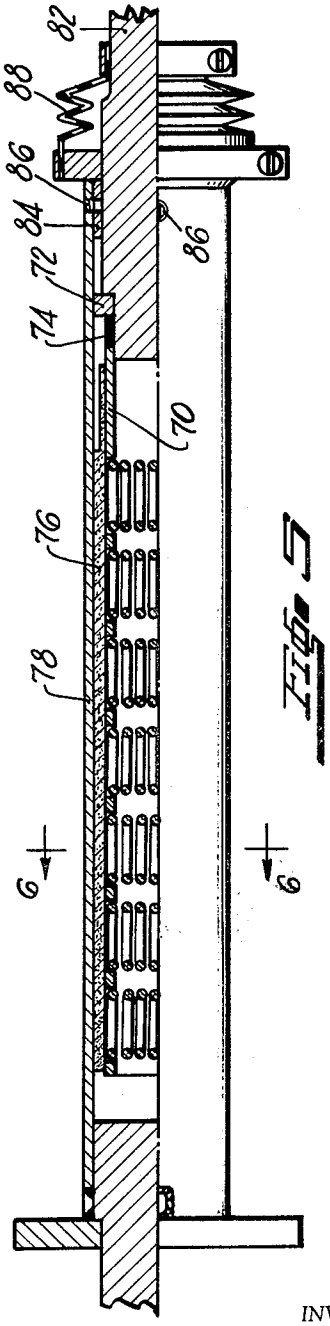

Fig. 5

INVENTOR.
GAROLD E. GROSSNICKLE
BY Cecil F. Arey
ATTORNEY

Dec. 22, 1964 G. E. GROSSNICKLE 3,162,275

RAILWAY CAR TRUCK LINK

Filed March 15, 1962 4 Sheets-Sheet 4

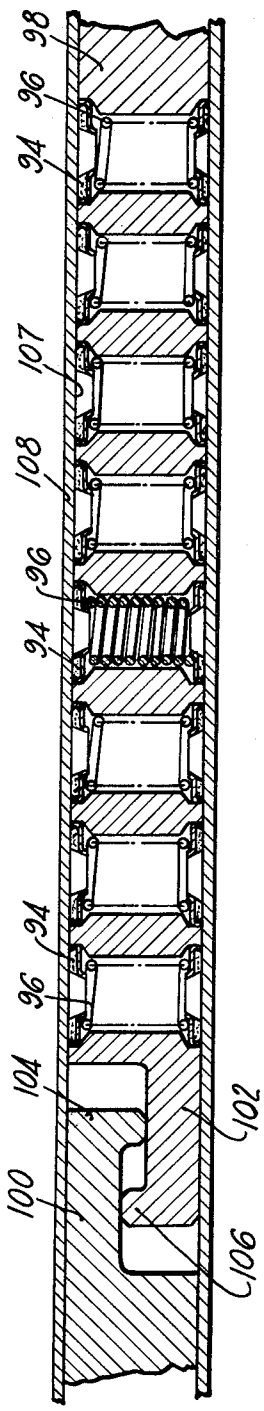

Fig. 7

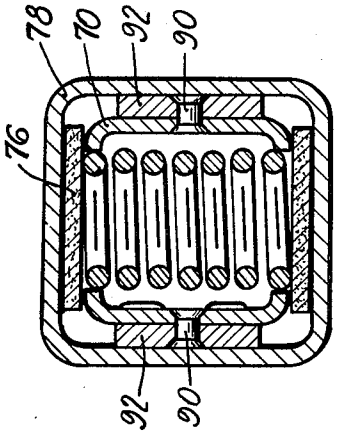

Fig. 6

INVENTOR.
GAROLD E. GROSSNICKLE
BY Cecil F. Arenz
ATTORNEY

United States Patent Office 3,162,275 Patented Dec. 22, 1964

3,162,275

RAILWAY CAR TRUCK LINK

Garold E. Grossnickle, South Bend, Ind., assignor to The Bendix Corporation, South Bend, Ind., a corporation of Delaware

Filed Mar. 15, 1962, Ser. No. 179,860
3 Claims. (Cl. 188—129)

This invention relates to novel snubbing means between a railway car truck and car body.

It is a principal object of the invention to reduce noise and vibration of a truck assembly through the incorporation of a snubbing link assembly between the car and truck assembly.

It is also an object to restrict the motion of a pivotally mounted truck assembly while isolating vibrations of said truck assembly from the associated car body.

Another object is to provide a vibration damper capable of providing a maximum travel stop between a swinging and non-swinging member.

Still another object is to provide a friction control unit comprising adjustably mounted friction shoes.

Other and further objects may be readily ascertained by those skilled in the art by reference to the following specification and drawings in which:

FIGURE 1 is a side view of a railway car truck incorporating a link in accordance with the present invention;

FIGURE 2 is a plan of a railway car truck incorporating a link in accordance with the present invention;

FIGURE 3 is a longitudinal partial section of a link assembly of the present invention;

FIGURE 4 is an end section taken along line 4—4 of FIGURE 3 of the link assembly;

FIGURE 5 is a longitudinal broken section of a modified link assembly in accordance with the present invention;

FIGURE 6 is an end section taken along line 6—6 of FIGURE 5 of the modified link assembly of FIGURE 4; and

FIGURE 7 is a horizontal section of another modification of the link assembly in accordance with the present invention.

With reference to FIGURE 1, a railroad truck **10** is shown to which is pivotally mounted an air suspended bolster **12** which is in turn secured to the car body **14**. As is also seen in FIGURE 1, a tension-compression link **16** is connected, as at **18**, to the end of the bolster and, as at **20**, to the car frame. This linkage fixes the bolster with respect to the car frame, and a similarly extending link is operatively connected with the other end of the bolster **12**. In a modification, as presented by FIGURE 2, the snubbing links are affixed to the opposite ends of the bolster **12** to extend in opposite directions.

With such a snubbing connection between a truck bolster **12** and a car body **14**, the vibrations and noise from the truck are dissipated by relative movement between inner and outer members of the snubbing unit **16**, as will be hereinafter discussed.

With reference to FIGURE 3, the details of the link **16** are more clearly presented. More particularly, the link **16** is seen to comprise an elongated metal casing **26** which is attached to an end fitting **28** in any suitable manner, such as by welding, as shown at **30**. At the opposite end of said casing a collar **32** is welded to said casing. However, other means of attaching the collar, such as by threading the casing and the collar, may be utilized to permit ready access to the parts operatively arranged within the cylinder or casing **26**.

Within the casing **26**, as may be more readily ascertained by FIGURE 4, are a plurality of lining plates **34** and **38**, which function as friction shoes for friction lining

surfaces **42** and **44**, respectively. The friction linings **42** and **44** may be bonded, riveted, etc. to the plates **34** and **38**, and are preferably of a ceramic and metallic lining material. However, it is not to be construed that this invention is limited to the use of a ceramic and metallic lining composition, as such is merely recited to show the need for a lining material which has a near constant coefficient of friction. The requirement for a lining having a nearly constant coefficient of friction is not, however, to be treated lightly, for it is necessary that a constant static and dynamic coefficient of friction be obtained to hold the dynamic or moving force approximately equal to the static or breakaway force. In addition, it may be readily appreciated that the shoe and lining design lend to ease of replacement should a removable collar or other type of end cap be provided.

The lining plates **34** and **38** are provided with a plug as at **48**, which is fitted within a bore **36** within a rectangular block **40**, having a plurality of drilled passages receiving a plurality of springs **46**. The plug **48** merely serves to hold the shoe plates **34** and **38** in the longitudinal direction while permitting plates **34** and **38** freedom of movement in a direction to engage the friction linings **42** and **44** with the inner walls of the casing **26**.

As may also be seen with reference to FIGURES 2 and 3, the springs **46** urge the plates **34** and **38** with the linings **42** and **44**, respectively, outwardly to hold the two lined plates against the opposing inside walls of the casing. The desired load of the inner member relative to the outer casing **26** in opposition to tensile or compressive forces can be obtained by varying the spring loading and lining area making the unit quite versatile.

The elongated rectangular block **40** is formed with end portions **50** and **52**. The end **50** has a projecting male portion **51** surrounded by a bearing sleeve **54**, which end and bearing sleeve are adapted to reciprocate within the bore **56** of the end fitting **28**. The end fitting **28** limits the travel of the block **40** in one direction. The end **52** is internally threaded to receive an externally threaded rod **58**, which is welded at **60**, which weld also joins plates **62**, only one of which is shown, at the top and bottom of member **40**. These plates **62** aid in removing torque by their direct contact with casing **26** from the linings **42** and **44** when the units **16** are removed or installed by being rectangular in shape to engage the inner walls of casing **26**.

A second bearing member **64** slides over the externally threaded rod **58** and abuts the end piece **52** on one end and a nut **66** on the other. Since the bearing member **64** extends about the rod **58** in the area where said rod emerges from within the casing **26**, the bearing member serves to not only support said rod within said casing, but to also center the rod **58**. There is also shown associated with the bearing member **64** a fluorocarbon sleeve **68** mounting said bearing member **64** within the collar **32** and forming a wiper seal acting in both directions.

As above stated, the assembled unit **16** has the rod **58** and the end fitting **28** connected to the car body **14** and the truck bolster **12**. In addition, such connection may involve rubber grommets in the connections **18** and **20** which will aid the function of unit **16** by acting as absorption members for minor shocks, etc.

In operation, the mechanical shock absorbing tension-compression link receives shock loads in excess of the absorption limit of the rubber grommets and dissipates said loads by the action of the friction linings **42** and **44** on the inner walls of the casing **26** as one side of the truck passes over a rail joint or the like. As the wheel on the opposite side of the truck passes the next rail joint, the cycle is reversed, thus pulling or pushing the damper type link **16** back to its initial position.

The link **16** may be modified as in FIGURE 5 and

FIGURE 6. In more detail, the link of FIGURE 5 and FIGURE 6 shows a spring carrier assembly **70** of simplier detail having a stop collar **72** welded as at **74** to the spring carrier assembly **70** that urges friction linings **76** against the inner walls of a casing **78**. It is also intended that the weld **74** attach the collar **72** to a translatable member **82**. The translatable member **82** is supported in the casing **78** by the bearing member **84** held to said casing as by the set screws **86**, and the casing is sealed about said translatable member **82** by a flexible bellows type seal **88** to prevent foreign particles from entering said casing.

As seen in FIGURE 6, the spring carrier assembly **70** is further modified by securing thereto, as by rivets **90**, a pair of spacer blocks **92** to prevent misalignment of said spring carrier assembly and the friction linings **76**.

As for the modified link of FIGURE 7, the principal features are the use of a plurality of friction discs or buttons **94** located at opposite ends of the springs **96** in the spring carrier assembly **98**. A finger **102** is formed on carrier **98** to connect the spring carrier assembly with the surrounding fixed structure by a gib headed finger assembly comprising fingers **100** and **102** having normal projections **104** and **106**, respectively, which heads abut to form a tension stop for said unit. In compression, the heads **104** and **106** impinge on surrounding structure in a spaced relation to form a limit for such movement.

In addition, the unit of FIGURE 7 utilizes the inner walls **107** of the cylinder **108** as an alignment and bearing surface for the spring carrier **98** as well as for a friction surface for the friction discs or buttons **94**.

Thus, it is seen that a link structure is presented for uniting at least two structures in such a way that vibrations from one to the other are isolated by mechanical dissipation means and that one structure may move in a limited range with respect to the other.

As other and further applications of the present invention are possible by those skilled in the art relating to such devices, the present invention is limited to such features as are apparent in the appended claims only.

I claim:

1. A mechanical shock absorber comprising:
a cylinder;
a rod;
a slidable carrier assembly attached to said rod and reciprocably inserted in said cylinder, said assembly including a one-piece block having drilled openings, a plurality of plates overlying said block, a plurality of spring means within said openings compressed between said plates and means to hold said plates axially on said block, which means allows said plates to move in a normal direction to the axis of said block;
a lost motion connection means joining one end of said assembly to one end of said cylinder which connection will allow said assembly limited movement in said cylinder and at the same time provide a solid mechanical link after the allowed movement has been experienced;
a means to join the other end of said assembly to said rod;
a closure for the other end of said cylinder opposite the end of said cylinder that is connected with said assembly, which closure is adapted to slidably and sealingly support said rod;
a plurality of friction linings joined to said plates to be thrust against said cylinder whereupon said assembly is frictionally restrained in said cylinder; and
bearing means on said assembly for holding said assembly centrally of said cylinder to prevent structural deformation and failure of said shock absorber.

2. A snubber unit comprising:
a hollow cylinder provided with stop means and closure means;
a plurality of friction surfaces carried by a member having means to resiliently urge said friction surfaces to operatively engage the inner walls of said cylinder;
a force transmitting rod affixed to said member for reciprocating said friction surfaces;
a rod bearing means operatively connected to said closure means and said rod to slidably support said rod and said member; and
a bearing means affixed to said member carrying said friction surfaces to locate said friction surfaces in said cylinder.

3. A snubber unit comprising:
a hollow cylinder provided with stop means and closure means;
a plurality of friction surfaces carried by a member having means to resiliently urge said friction surfaces to operatively engage the inner walls of said cylinder, said friction surfaces arranged for reciprocation within said cylinder as limited by said stop means;
a plurality of end pieces associated with said member carrying said friction surfaces, which end pieces are arranged to abut said stop means; and
a plurality of bearing members forming said bearing means and associated with said end pieces to center said friction surface carrying member in said cylinder and to prevent misalignment of said friction surfaces and their carrying member when said snubbing unit is in a horizontal attitude.

References Cited in the file of this patent

UNITED STATES PATENTS

2,139,666	Bogart	Dec. 13, 1938
2,746,744	Blattner	May 22, 1956
2,747,696	Blattner	May 29, 1956
2,908,230	Dean	Oct. 13, 1959
3,020,857	Dean	Feb. 13, 1962

FOREIGN PATENTS

1,131,851	France	Oct. 29, 1956