(No Model.) 7 Sheets—Sheet 1.

T. L. BROOKS.

COIN CONTROLLED ELECTRICAL APPARATUS.

No. 456,718. Patented July 28, 1891.

Fig. 10.

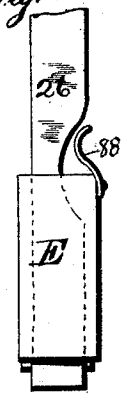

Fig. 11.



Fig. 1.

Fig. 12

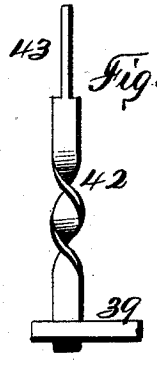



Fig. 13.

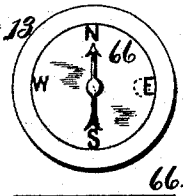

Fig. 14.

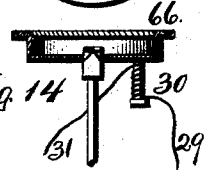

WITNESSES:

H. P. Dimmon

Silas J. Hogan

INVENTOR

Theodore L. Brooks

BY

Smith & Dimmon

his ATTORNEYS.

THE NORRIS PETERS CO., PHOTO-LITHO., WASHINGTON, D. C.

(No Model.) 7 Sheets—Sheet 2.

T. L. BROOKS.

COIN CONTROLLED ELECTRICAL APPARATUS.

No. 456,718. Patented July 28, 1891.

Fig. 2.

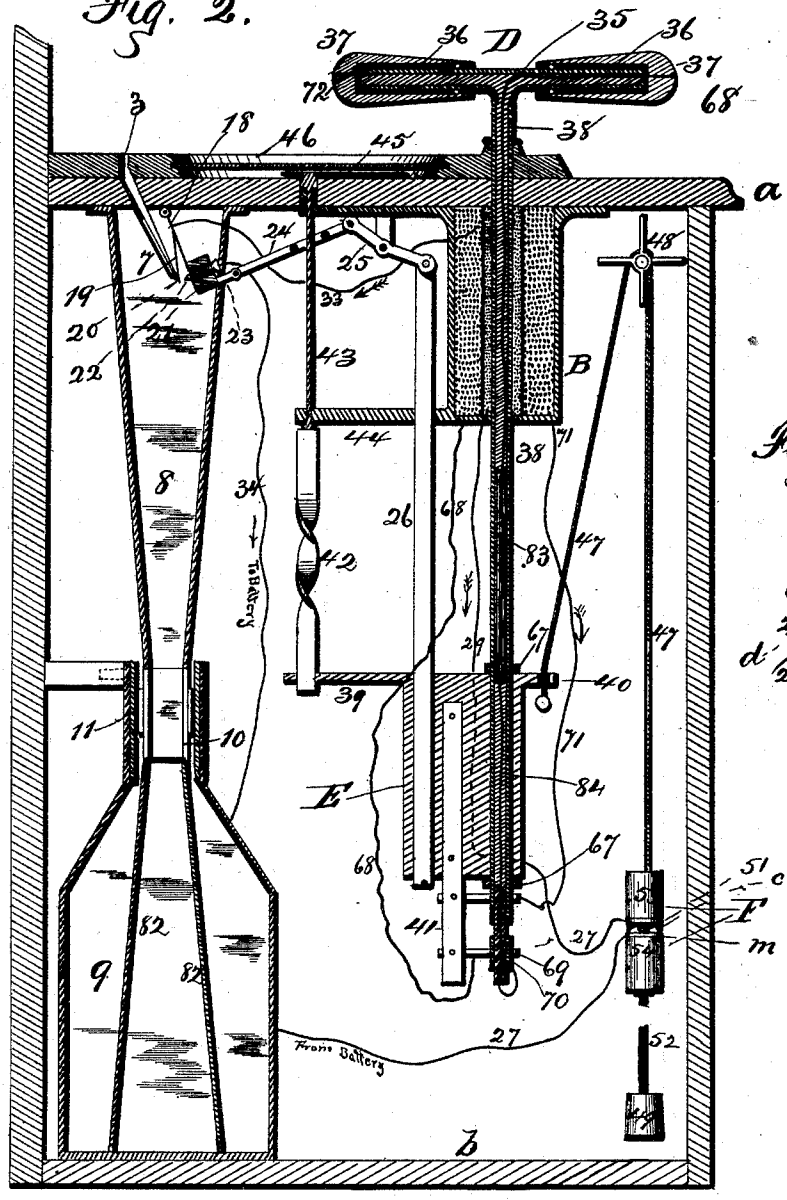

Fig. 15.

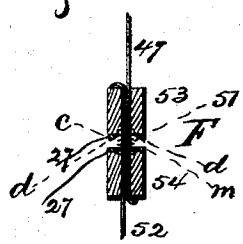

WITNESSES:
H. P. Dimmock
Silas J. Hogan

Theodore L. Brooks INVENTOR
BY
Smith & Dewitt
his ATTORNEYS

THE NORRIS PETERS CO., PHOTO-LITHO., WASHINGTON, D. C.

(No Model.) 7 Sheets—Sheet 3.

T. L. BROOKS.

COIN CONTROLLED ELECTRICAL APPARATUS.

No. 456,718. Patented July 28, 1891.

Fig. 3.

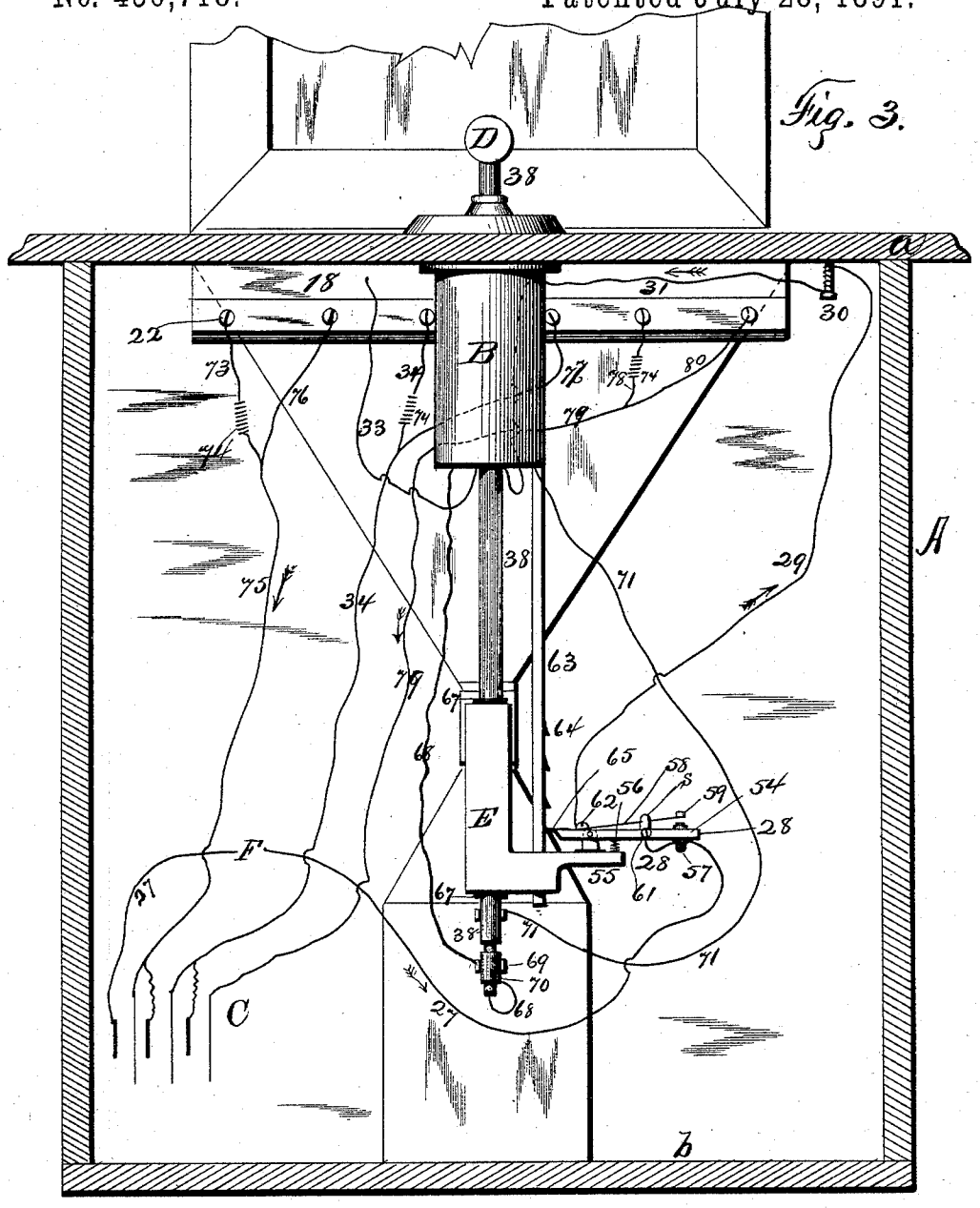

WITNESSES:
H. P. Denison
Silas J. Hogan

Theodore L. Brooks INVENTOR
BY
Smith & Denison
his ATTORNEYS

THE NORRIS PETERS CO., PHOTO-LITHO., WASHINGTON, D. C.

(No Model.) 7 Sheets—Sheet 4.

T. L. BROOKS.

COIN CONTROLLED ELECTRICAL APPARATUS.

No. 456,718. Patented July 28, 1891.

Fig. 4.

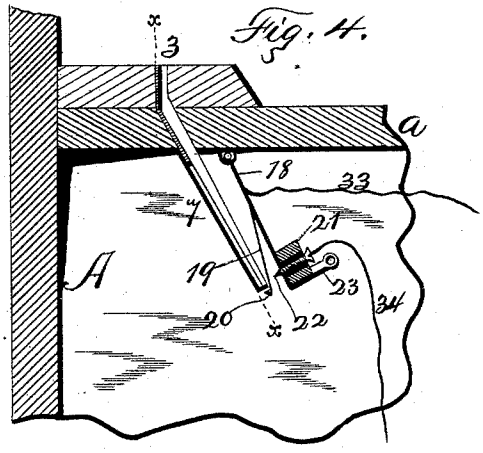

Fig. 5

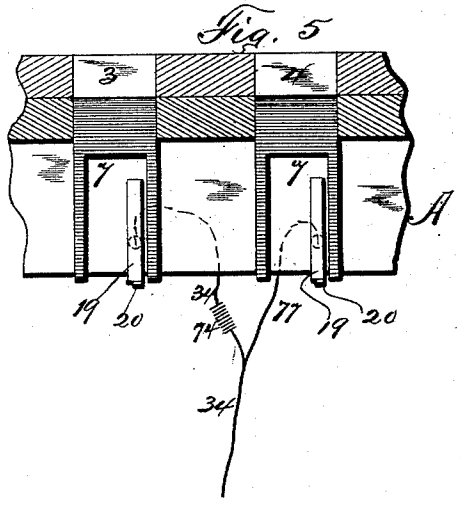

Fig. 6.

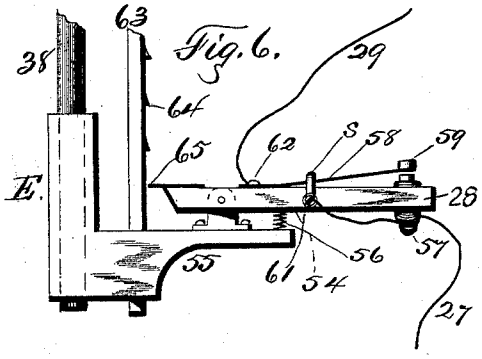

Fig. 7.

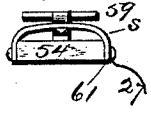

Fig. 8.

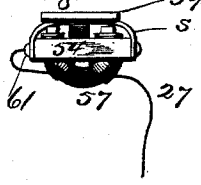

Fig. 9.

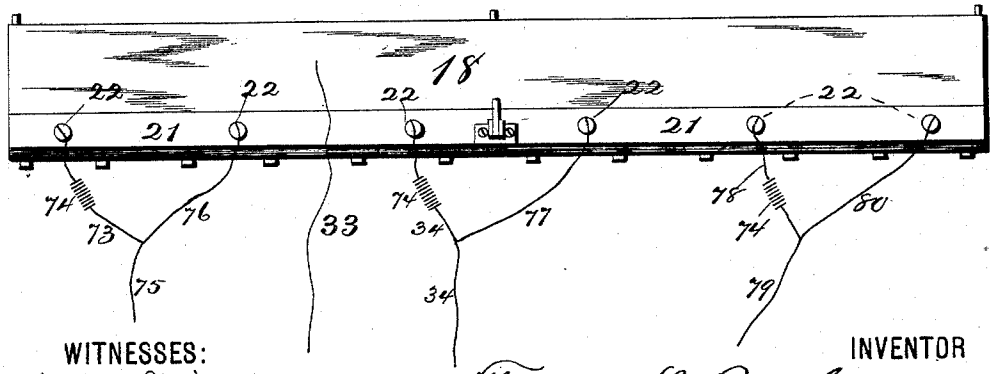

WITNESSES:

H. P. Dimmick

Silas J. Hogan

INVENTOR

Theodore L. Brooks

BY

Dewitt & Davison

his ATTORNEYS

THE NORRIS PETERS CO., PHOTO-LITHO., WASHINGTON, D. C.

(No Model.) 7 Sheets—Sheet 5

T. L. BROOKS.

COIN CONTROLLED ELECTRICAL APPARATUS.

No. 456,718. Patented July 28, 1891.

Fig. 16.

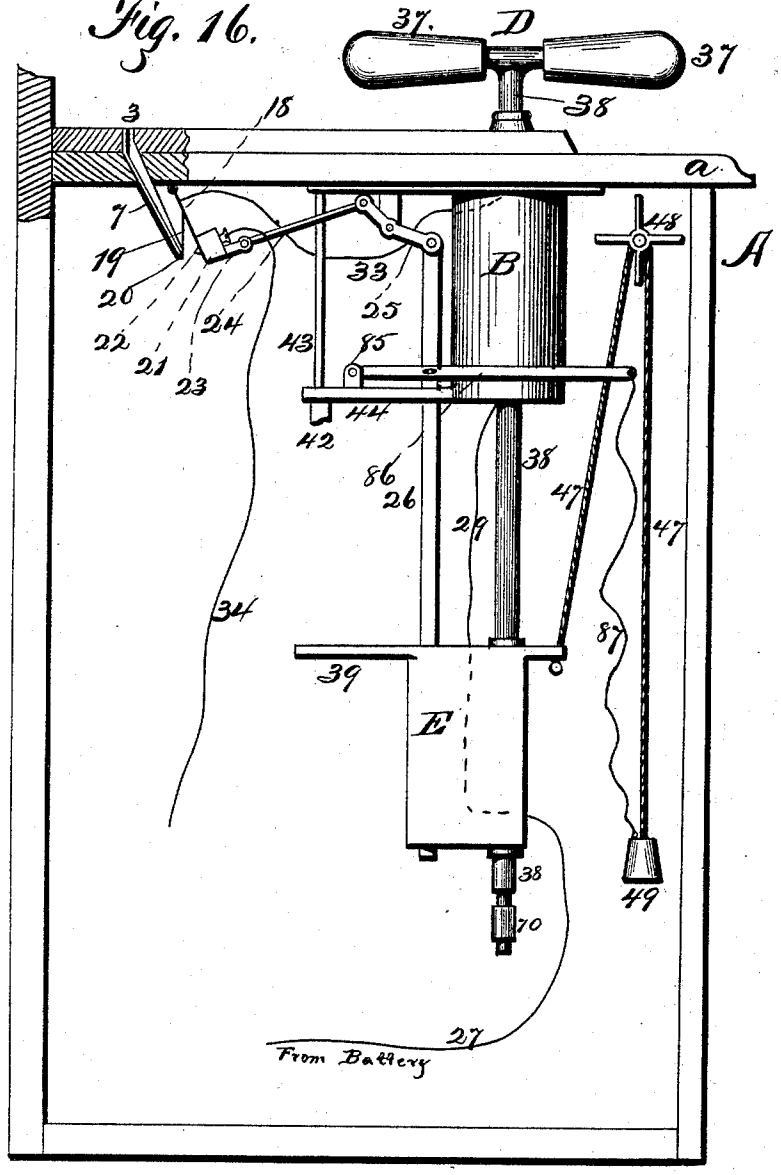

WITNESSES:
H. P. Dimson
Silas J. Hogan

Theodore L. Brooks INVENTOR

BY
Smith & Denison
his ATTORNEYS

THE NORRIS PETERS CO., PHOTO-LITHO., WASHINGTON, D. C.

(No Model.) 7 Sheets—Sheet 6.

T. L. BROOKS.

COIN CONTROLLED ELECTRICAL APPARATUS.

No. 456,718. Patented July 28, 1891.

Fig. 17.

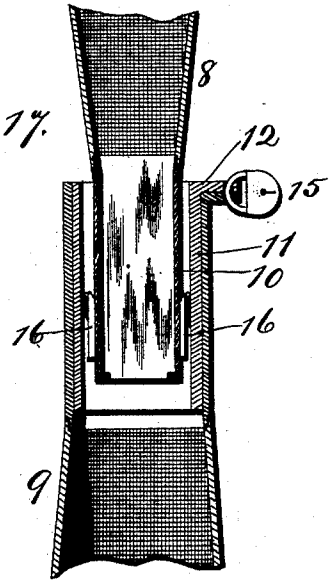

Fig. 18.

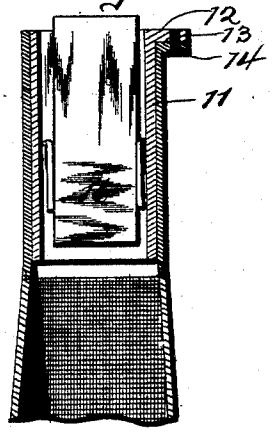

Fig. 19.

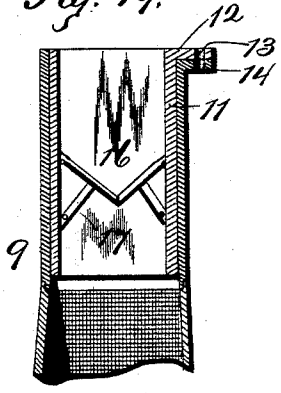

Fig. 20.

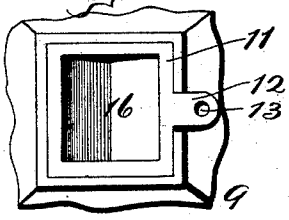

Fig. 21.

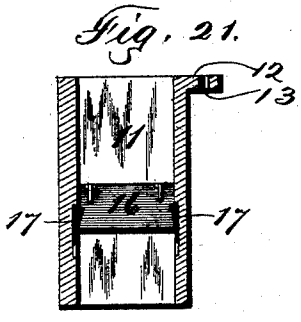

WITNESSES:
H. P. Dawson
Silas J. Hogan

Theodore L. Brooks INVENTOR
BY
Smith & Dewitt
his ATTORNEYS

THE NORRIS PETERS CO., PHOTO-LITHO., WASHINGTON, D. C.

(No Model.) 7 Sheets—Sheet 7.

T. L. BROOKS.

COIN CONTROLLED ELECTRICAL APPARATUS.

No. 456,718. Patented July 28, 1891.

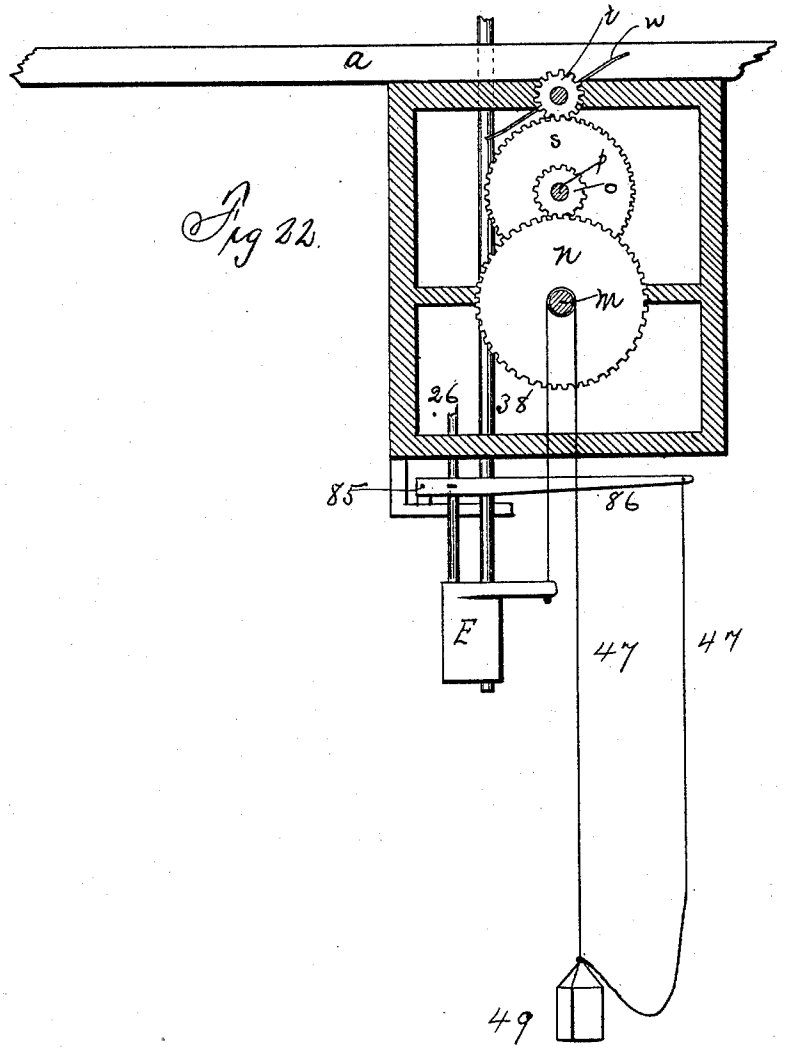

Fig 22.

Witnesses
E. V. Mack.
H. A. Carhart.

Theodore L. Brooks Inventor

By his Attorneys
Smith & Denison

THE NORRIS PETERS CO., PHOTO-LITHO., WASHINGTON, D. C.

UNITED STATES PATENT OFFICE.

THEODORE L. BROOKS, OF PORT BYRON, NEW YORK.

COIN-CONTROLLED ELECTRICAL APPARATUS.

SPECIFICATION forming part of Letters Patent No. 456,718, dated July 28, 1891.

Application filed May 19, 1890. Serial No. 352,289. (No model.)

To all whom it may concern:

Be it known that I, THEODORE L. BROOKS, of Port Byron, in the county of Cayuga, in the State of New York, have invented new and useful Improvements in Coin-Controlled Electrical Apparatus, of which the following, taken in connection with the accompanying drawings, is a full, clear, and exact description.

My invention relates generally to that class of apparatus known as "coin-controlled mechanisms" for different objects, and which operate or are released for operation by the deposit of a coin of a specified size in a slot, and it relates specifically to that kind which are adapted to administer an electric shock of even or of varying or graduated strength.

My object is to produce such a machine or apparatus in which the strength of force of the electrical charge is graduated from a light one up to a heavy one by varying the resistance and the connections to the battery-cells, so that, as shown in the drawings, I can administer shocks of six degrees or grades of strength, such strength being graduated from 1 to 6, a separate coin-slot being provided for each grade, the introduction of a coin of a specified size assisting to make a circuit, as hereinafter described, no matter in which slot it is deposited, so that the apparatus is then prepared ready to be operated.

My invention consists in the several novel features of construction and operation hereinafter described, and which are specifically set forth in the several claims hereunto annexed. It is constructed as follows, reference being had to the accompanying drawings, in which—

Figure 1 is an isometrical elevation of the apparatus complete. Fig. 2 is a vertical transverse section. Fig. 3 is a vertical longitudinal section. Fig. 4 is a sectional detail of one of the coin-chutes. Fig. 5 is a vertical section of Fig. 4 on line *x x*. Fig. 6 is a side elevation of my vibrator detached. Fig. 7 is a rear elevation of the vibrating bar detached. Fig. 8 is a front elevation of the same. Fig. 9 is a plan view of the swinging side or front of plate to which all of the wires lead from the battery. Fig. 10 is a detail of the bar operating the lever which opens and closes the coin-chute circuit. Fig. 11 is a plan of the bar separated from its connection in the frame. Fig. 12 is an elevation of the mechanism for rotating the pointer to show the strength of the current, and a plan of the arm and slot. Fig. 13 is a plan of the polarity dial. Fig. 14 is a transverse section of same. Fig. 15 is a section of the circuit-breaker open. Fig. 16 is a sectional elevation in the same plane as Fig. 3, in which I show the whole mechanism operated by a single circuit-closer. Fig. 17 is an enlarged vertical section of the lower end of the money-guide and of the upper end of the money bag or receptacle and bag-holder in position. Fig. 18 is a vertical transverse section of the top of money-bag and bag-holder detached. Fig. 19 is a like view of same at the opposite angle to Fig. 18. Fig. 20 is a top plan of same. Fig. 21 is a vertical section of the bag-holder detached. Fig. 22 is a sectional detail illustrating a time escapement to regulate the period of the "closed circuit" or the duration of the electrical shock.

A is the casing, of which *a* is the top and *b* the base, connected by vertical sides, and in the top, adjacent to its rear edge, I cut six slotways numbered 1 2 3 4 5 6, of proper size to receive a given coin—say a five-cent nickel—each slotway being provided with a chute 7 below the top, which discharges into a tubular guide 8, which conducts the coin into the money bag or receptacle 9, when it is discharged from the chute as hereinafter described.

The lower end of the money-guide is provided with a straight neck 10, and 11 is an automatic lock fitting over this neck 10, and is provided on top with an arm 12, in which is an eye 13, and the neck of the money-bag or coin receptacle is adapted to fit upon the lock 11, and provided with an arm 14 and eye coinciding with the arm 12 and its eye, and 15 is a lock inserted through the eyes and holding the bag and lock 11 together.

The automatic lock 11 consists of a tube provided internally with a shutter or closer 16, consisting of two doors hinged upon the inside of the tube and standing downward at an angle to each other and supported by springs 17 in such manner that when this lock-tube is placed over the neck of the guide the plug between the doors will be forced

downward and open, as shown in Fig. 17, the neck 8 following the plug as it pushes it down, and when the holder is removed the doors will automatically close to the position shown in Fig. 19 and retain all coins dropped through the chutes into the tubular guides 8 down into the money-bag, the springs 17 flying up behind the doors, and then to remove the money I remove the lock 15 and the bag slips off from the lock-tube 11, and then, when I have poured the money out, I loosen the springs from below, so that I can open the doors far enough to put in the plug, and the springs will then cause the doors to grip the plug and hold it until it is forced down again by the insertion of the neck 10 of the chute 8, as before, the plug dropping into the bag.

In front of the chutes I suspend a metallic plate 18 by a hinge connection to the top, and upon its rear face I secure a spring-finger 19, provided at its free end with a hook or shoulder 20, using one finger for each coin-aperture. Upon the lower edge of this plate I secure an insulating-block 21, through which I pass the platinum-point contact-screw 22, the point of which projects rearward, and 23 is a short bar secured to this block and hinged to the connecting-rod 24, which is in turn hinged to the rear arm of the lever 25, which is pivotally mounted on a stud extending downward from the top, and the front end of the lever is hinged to the upper end of the vertical bar 26. The hook on the spring-finger is normally in close proximity to the chute.

B is an ordinary induction-coil supported below the top. The primary of said induction-coil is connected to the battery C by the wire 27, the vibrator 28, the wire 29, leading to the bar-magnet 30, supported below the top of the casing, and thence by the wire 31, which leads into the lower end of the primary coil. The wire 33 connects this coil to the metallic contact-plate 18, and the wire 34, connected to the screw 22, leads to the battery, and the circuit through the plate and screw is closed when a coin is behind the spring-finger, and the contact-point of the screw makes its contact with the spring-finger, as hereinafter described.

D is my duplex handle, consisting of a tubular body 35, a coating of insulating material 36, and grip-blocks 37, fitting over the ends. This handle is mounted upon the top of a tubular rod 38, which passes down through the top, through the induction-coil, and through the frame E, in which it is secured, so that the frame is lifted or lowered by the raising or lowering of the handle. This frame is provided on top with an arm 39 on one side and an arm 40 on the other side; also, an insulated bar 41 is secured thereon or in it and projecting below it. The arm 39 is provided with a slot adjacent to its outer end, through which the screw-bar 42 passes, which is provided with a top stem 43, passing through an arm 44 on the casing of the induction-coil, and thence passing upward through the top plate, and is provided on its upper end with the pointer 45 of the dial 46, which is let into the top of the casing. The arm 40 is adapted to hold one end of the rope or cord 47, which passes over the pulley 48 and carries the automatic circuit-breaker F upon its lower end and the weight 49, by which the circuit is broken, as hereinafter explained. This circuit-breaker consists of two blocks of insulating material 53 and 54, provided with a central vertical hole through which the cord 47 passes downward through them and is secured to the lower one, and the cord or wire 52, carrying the weight 49, passes upward through them and is secured to the upper block, and 51 is a spring around these cords between the blocks and properly insulated. A metallic ring-plate *c* is secured to the lower end of the upper block and provided with a contact rim or points *d* and means for connecting the wire 27 thereto. On the top of the lower block I secure another metallic ring *m*, provided with means for connecting the wire 27 thereto. Then when by raising the handle and frame the cord 47 is lowered until the weight strikes the floor, then the effect of the weight being removed, the spring will force the blocks apart and break the circuit, and the breaking of this circuit stops the current to the handles and the shock to the person holding them. Then when the handles and frame are lowered the weight is raised from the floor and from the cross-connection of the blocks by the cords, the weight and cord 47 will both operate to draw the blocks together and close this circuit while the coin-chute circuit is being broken ready for the handles to be again raised to close the coin-chute circuit again to impart another shock. The length of time that this circuit is closed is also regulated by an ordinary escapement, over which the rope passes, as at 48.

The battery C is shown in Fig. 3 as consisting of three jars or cells, and the full energy thereof is conducted by the wire 27 to the circuit-breaker F, and, when this is closed, is conducted to and through the vibrator 28, and thence by the wire 29 to the bar-magnet 30, and thence by the wire 31 to the induction-coil and the wire 33, connected with the plate 18. The vibrator 28 consists of a bar of wood or non-conducting material 54, pivoted upon arm 55, projecting out from the bottom of the frame E, a spring 56 between the bar and the arm, a magnet 57 upon the outer end of the bar, a spring-finger 58, secured at one end of the bar and carrying an armature 59 upon its free end, a bar *s*, extending from one side of the bar 54 over to the other, arching above the spring, and provided with an ordinary platinum point located under and substantially in the center of the arch, and the wire 27 leads from the magnet to the binding-screw 61, which also holds the arch in place, and thus completes the circuit with the arch,

which normally is in circuit with the spring and through the binding-screw 62 with the wire 29.

At 63 I show a vertical rod rigidly secured to the casing of the induction-coil, its lower end fitting loosely in a mortise through the arm 55, and the rod is also provided with ratchet-teeth 64, which are adapted to engage with a lip 65 upon the rear end of the bar 54, so that when the frame is raised by the handle the lip will catch under the first ratchet and the continuance of the lifting of the handle will tilt the lever, raising the outer end of the bar 54, until the lip is released from the ratchet-tooth, and then the bar will fall upon the spring, causing the spring to vibrate and the bar to rebound, bringing the armature into momentary contact with the poles of the magnet. Then the spring will break this contact and renew that with the point on the arch, and this vibration of the armature and spring will continue until the circuit is broken.

The bar-magnet 30 actuates the magnetic needle in the dial 66, embedded into the face of the top A, in the ordinary manner.

The collars 67 around the rod 38, one above and the other below the frame, hold the rod in place, but leave it so that it can be turned or twisted freely.

When a nickel is inserted into the slot 3, Fig. 2, the point or hook 20 catches it, and then when the handle is raised this raises the frame. The bar 26 operates the lever 25, pushing the connecting-rod 24 backward, brings the point 22 into contact with the coin, (or spring,) and makes this circuit first. Then, on account of the slack in the circuit-breaker F and its connections, the second circuit is not made through F, as above described, until all of the slack is taken up by the lowering of the weight, and then the current is conducted from the coil by the wire 68 to the lower clip 69, supported by the bar 41 and insulated therefrom and fitting around the insulated sleeve 70 within it, and thence the wire extends up through the tubular rod and insulated therefrom into the handle D, and thence to the right, and is connected to the grip 37 on that side of the handle. The wire 71, leading from the coil to another clip carried by the bar 41, energizes the tubular rod and the tubular body of the handle, and through a short wire 72 the grip on the left is energized, so that the two grips form two poles, and when grasped by the hands form a circuit through the person grasping them, and thus an electric shock is imparted. The intensity or strength of this shock is controlled and regulated according to the slot in which the coin is placed. Thus the slot No. 1 gives the weakest shock or current, No. 2 a shock double that of No. 1, No. 3 a shock treble that of No. 1, No. 4 a shock quadruple that of No. 1, No. 5 a shock quintuple that of No. 1, and No. 6 a shock sextuple that of No. 1. So when a coin is dropped into slot 1 and that circuit is made the wire 73, being provided with a resistance 74, and being connected to the battery by the wire 75, imparts a shock of, say, one-half of a cell. When it is dropped into slot 2 and a circuit is made, as before, the wire 76, being connected as a branch to wire 75, imparts a shock equal to a whole cell, and so a coin placed in slot 3, through its wire 34 and its resistance and battery connections, imparts a shock of a cell and a half; a coin in slot 4, through the branch 77 of the wire 34 and its battery connections, a shock of two cells; by a coin in slot 5, its wire 78, and its resistance and connections to the battery, through wire 79, a shock of two and a half cells, and the wire 80, branching to the wire 79 and its battery connections, a shock of three cells. This illustrates the principle of my invention. All of these wires and branches are connected to screws 22, through an insulating-bar 21, Fig. 2, and each screw makes an electrical circuit, as before described. Then when the handle is lowered by an escapement or air cushion the lever 25 is pulled down, which draws the rod 24 back, and this draws the plate and spring back far enough to permit the coin to drop into the bag before the circuit is broken, and then, an instant later, the breaking of the circuit releases the spring from the screw-point and it flies forward into position ready to catch the next coin, as shown in Fig. 2.

In Figs. 10 and 11 I show details of the connection of the bar 26 to the frame E, consisting in concaving the edge of the bar, as at 81, and in securing the spring 82 to the frame E, as shown in Fig. 10, in their normal positions, and then when I raise the frame the spring will come into frictional contact with the bar, and the slack shown may be sufficient to enable me to close the coin-circuit by the bar 26 and the circuit-breaker F simultaneously; or I can make them in succession, as above described.

At 82 I show bars extending from the top to the bottom of the bag, and which serve to hold it distended.

Within the rod 38 I place a core 83, supported by the wooden plug 84, inserted into the lower end of the rod, and which insulates the wire 68 from the rod, and when the handle is raised, bringing the core up into the coil, the strength of the shock is increased and increases in proportion as the graduator is drawn into the coil up to the full limit of the shock represented by the slot in which the coin is placed.

In Fig. 16 I show a construction using only the coin-chute-circuit closer, and consisting of a stud 85 on the arm 44, a lever 86, having one end pivoted in said stud, said lever having its fulcral bearing upon a pin on one side of the bar 26, and 87 is a cord connecting the free end of the lever to the weight 49, and which normally hangs slack, as shown. Then when I raise the handles and frame E, closing the coin-chute-circuit closer, as above de-

scribed, I also lower the weight until all of the slack in the cord 87 is taken up, and then the weight begins to operate upon the lever. This lever is also raised when the handles and frame are lifted. The effect of the weight is to pull the lever down, forcing the bar 26 down in spite of the friction of the spring 88 upon the bar, so that the weight gradually draws the bar down far enough to break the coin-chute circuit and end the electrical shock. Thus this weight, cord, and lever, so connected to the bar, operate to regulate and control the duration of the shock, according to the length of the cord and its slack.

In Fig. 22 I show an escapement for regulating the time or duration of the shock by regulating the time it takes the weight 49 to run down, so as to break the circuit. This comprises a suitable frame-work, a shaft *m*, mounted therein, around which the cable is wound spirally and having its free ends connected, as shown, a large gear *n*, mounted thereon, another shaft *p*, also mounted in the frame-work, a pinion *o* on this shaft, engaging with the gear *n*, a large gear *s* on this shaft, which engages with a small pinion *t* on another shaft mounted in said frame, and an ordinary flier *w*, secured on this shaft, such as is is used in clock-work. When the handle is raised, the weight rotates the shaft *m*, the gearing, and flier and is lowered gradually and uniformly through the frictional resistance of the gearing and the governing action of the flier. Then when the handle and frame E are lowered the cable is rewound and the weight raised by the backward rotation of the shafts and gearing, and, as shown in Fig. 16 or 22, a slack is created in the cable, and, as shown in Fig. 2, the rewinding of the cable raises the weight, and this draws the blocks together. When the handle in either case is raised, the escapement operates to regulate the time of the shock by regulating the descent of the weight, and the weight will continue to descend as long as the upward movement of the handle continues.

It will be observed that as the core enters the coil the shock begins and then increases as it is lifted and does not reach its maximum until just about the time when the limit of the lift is reached. It will be seen that so long as the upward movement continues the circuit cannot be broken and ordinarily will not be broken until the limit of the upward stroke is reached, which will be when the weight operates to break the circuit, as above described.

In Fig. 2 the circuit breaks when the weight reaches the floor, and in the other construction it is when the weight is directly dependent from the lever. In both cases the lift of the core is substantially the same as the length of the coil, and the drop of the weight is the same. This drop is not shown in Fig. 2, but should have been.

It will be further seen that when an operator lifts the core part of the way and stops then any slight lowering of the handle will break the circuit, whether voluntary or involuntary on his part.

What I claim as my invention, and desire to secure by Letters Patent, is—

1. In a coin-controlled apparatus, multiple independent coin-slots, each having a chute, a swinging contact-plate, a spring contact-finger attached to the plate for each chute, provided with a hook upon its free end, an insulating-block secured upon the plate, and contact-screws through the block, adapted to engage with the contact spring-fingers by the swinging of the plate, as set forth.

2. In a coin-controlled apparatus, multiple independent coin-slots, each having a chute, a swinging contact-plate, a spring-finger attached to the plate for each chute, provided with a hook upon its free end, an insulating-block secured upon the plate, contact-screws through the block, adapted to engage with the spring-fingers, an eye connected to the block, a lever, a rod connecting it to the eye, and means for operating the lever, as set forth.

3. In a coin-controlled apparatus, multiple independent coin-slots, each provided with a chute discharging into a spout common to all of the chutes, a neck at the bottom of the spout, a bag-holder, spring-doors within it, fitting over the neck of the spout, and a money-receptacle secured upon said neck, as set forth.

4. A circuit-breaker comprising a cable, blocks suspended therefrom, connected together and sliding upon a rod between them, a spring between the blocks, a weight suspended from the lower block, and means for raising and lowering the cable.

5. A handle mounted upon a tubular rod inserted through the top of the casing, a tubular rod, a main casing, an induction-coil suspended from the top, a frame upon the lower end of the rod, an arm thereon, a cable secured thereto, and a circuit-breaker carried by the cable and comprising two blocks connected by an insulated rod upon which they slide vertically, a spring between them, and a weight connected to the lower block, and wires connecting it to the battery.

6. The combination, with the handle and its rod, the frame upon its lower end, and the induction-coil, of a cable secured to the frame, carrying a circuit-breaker comprising blocks connected together by a rod upon which they slide, a spring between them, and a weight connected to the lower block, and wiring connecting the circuit-breaker to the battery and to the coil, a plate provided with multiple contact-points, a lever, and rods connecting the plate to the frame on the handle-rod, and multiple coin openings and chutes, and spring-fingers upon the plate, and wiring connecting the plate to the battery and to the coil, and a battery.

7. The combination, with the handle, the handle-rod, the insulated wire through the rod into one end of the handle, and the wire connected to the rod and to the other end of the handle, and the induction-coil, of the core within the rod.

8. The combination, with the money-bag, of the vertical distension-bars within it.

In witness whereof I have hereunto set my hand this 10th day of May, 1890.

THEO. L. BROOKS.

In presence of—
HOWARD P. DENISON,
C. W. SMITH.