L. H. BRINKMAN.

TUBE CORRUGATING APPARATUS.

APPLICATION FILED JAN. 11, 1913.

1,120,269.

Patented Dec. 8, 1914.

2 SHEETS—SHEET 1.

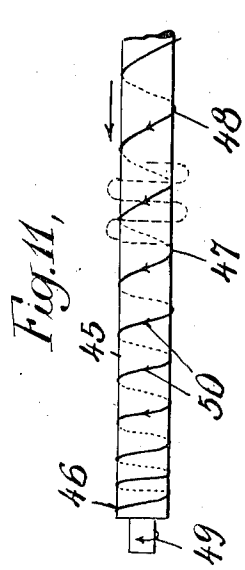

Fig. 11.

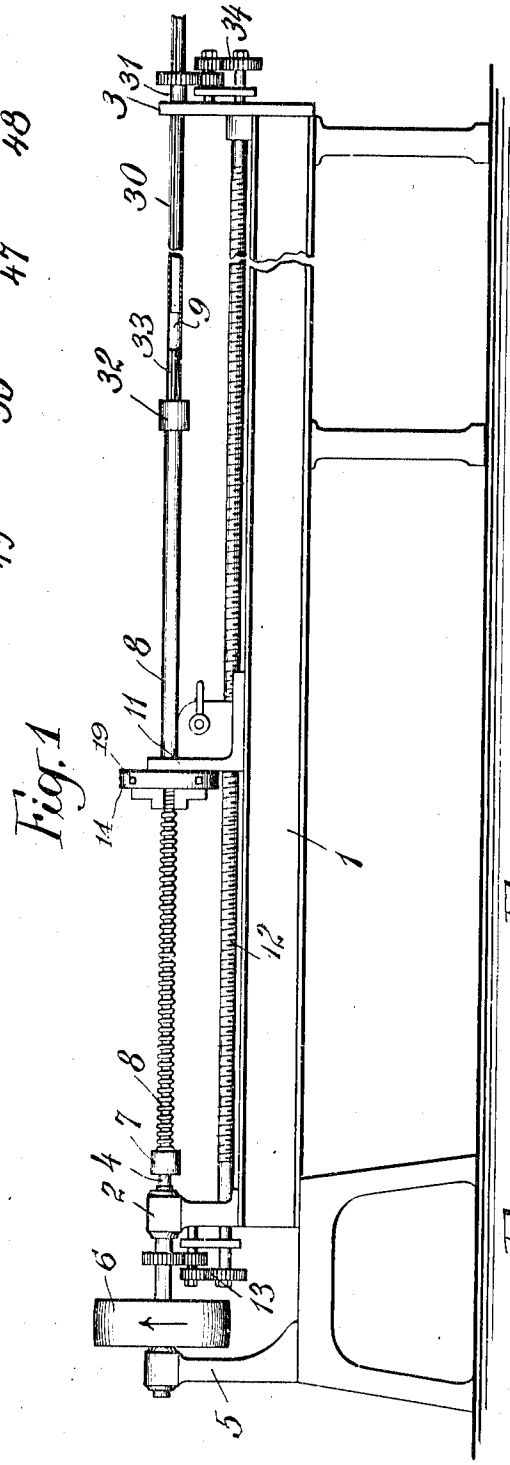

Fig. 1

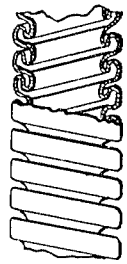

Fig. 9.

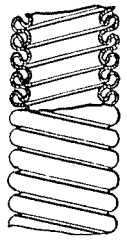

Fig. 8.

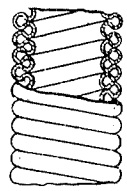

Fig. 7.

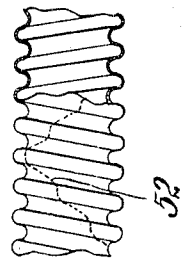

Fig. 6.

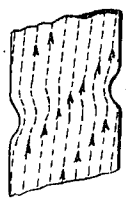

Fig. 10.

WITNESSES:

Samuel W. Ward Jr.

John O. Temple.

INVENTOR,

Louis H. Brinkman,

BY

Kenyon & Kenyon,

his ATTORNEYS.

L. H. BRINKMAN.

TUBE CORRUGATING APPARATUS.

APPLICATION FILED JAN. 11, 1913.

1,120,269. Patented Dec. 8, 1914.

2 SHEETS—SHEET 2.

Fig. 2,

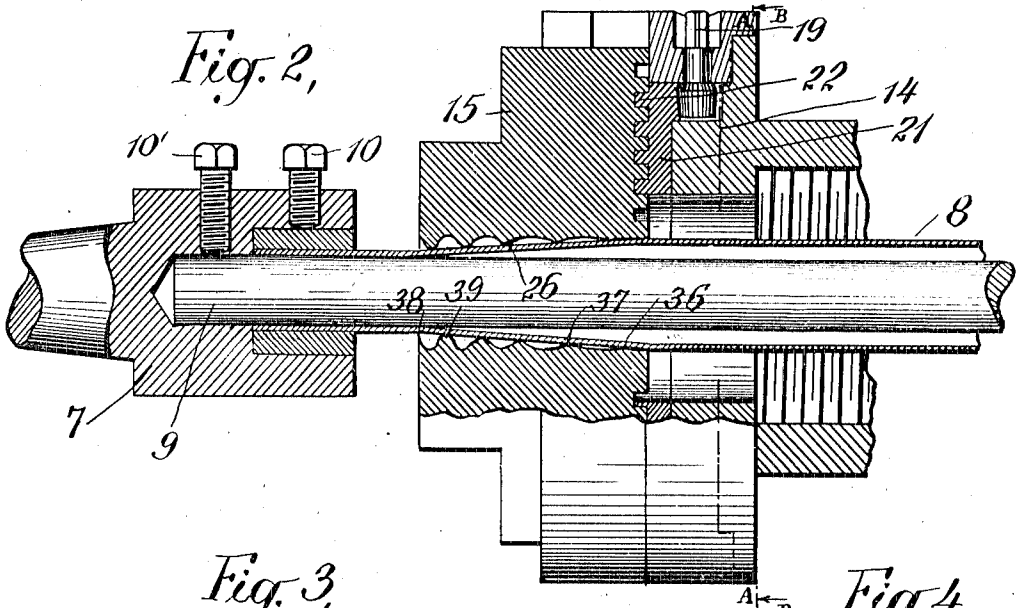

Fig. 3,

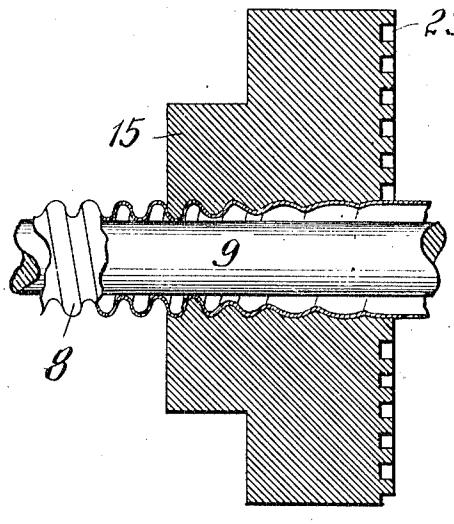

Fig. 4,

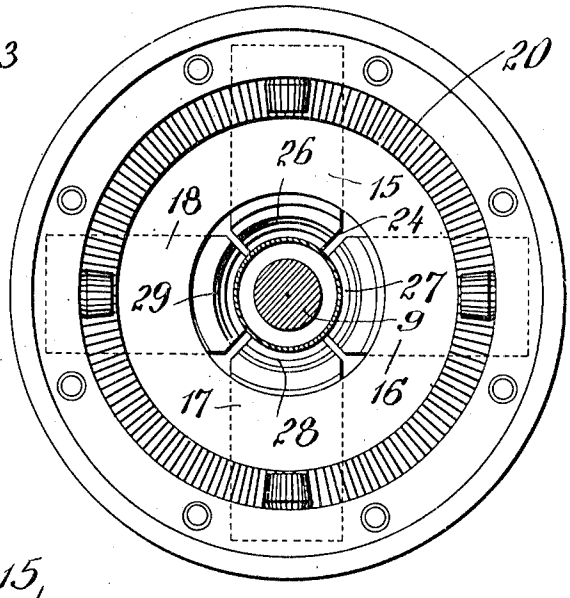

Fig. 5

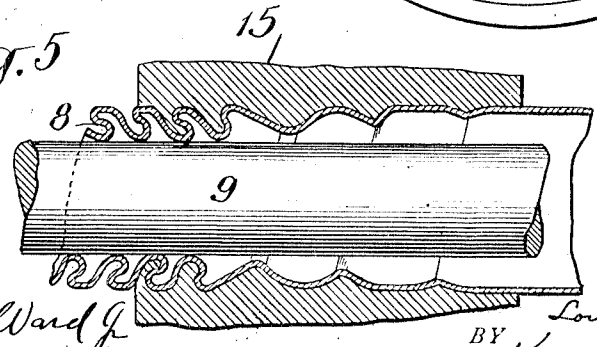

WITNESSES:

Samuel W. Ward Jr.

John O. Sempler

INVENTOR,

Louis H. Brinkman.

BY Kenyon & Kenyon

his ATTORNEYS.

UNITED STATES PATENT OFFICE.

LOUIS H. BRINKMAN, OF GLEN RIDGE, NEW JERSEY, ASSIGNOR TO BALTIMORE TUBE COMPANY, OF BALTIMORE, MARYLAND, A CORPORATION OF MARYLAND.

TUBE-CORRUGATING APPARATUS.

1,120,269. Specification of Letters Patent. Patented Dec. 8, 1914.

Application filed January 11, 1913. Serial No. 741,390.

To all whom it may concern:

Be it known that I, LOUIS H. BRINKMAN, a citizen of the United States, and a resident of Glen Ridge, county of Essex, State of New Jersey, have invented certain new and useful Improvements in Tube-Corrugating Apparatus, of which the following is a specification.

My invention relates to tube-corrugating apparatus, and more particularly to apparatus for corrugating tubes helically, and one of the objects of the invention is the provision of tube corrugating apparatus which will twist the tube in corrugating or folding it so as to displace the metal in such manner as to permit tubes to be corrugated with deep folds to render the tubes exceedingly flexible or provide a relatively great radiating surface.

Another object of the invention is the provision of tube-corrugating apparatus by means of which corrugated tubes of considerable length may be made, the lengths of the corrugated tubes being limited only by the lengths of tubes obtainable to be corrugated.

Another object of the invention is the provision of tube-corrugating apparatus by the means of which tubes may be corrugated with uniform folds.

Another object of the invention is the provision of tube-corrugating apparatus by means of which the tubes may be corrugated with folds of considerable depth without appreciably thickening, stretching or spinning out the metal during the folding process, so that the thickness of the walls of the tube will be substantially unchanged during the folding process.

Other features of the invention are the arrangement and construction of the apparatus whereby the corrugated tube may be twisted to any desired degree, and whereby the diameter of the corrugated tube will be equal to the diameter of the tube being corrugated, and whereby the axial sectional configuration of the folds may be varied as desired.

Various apparatus have been proposed for corrugating tubes helically in an attempt to form helically corrugated tubes with deep folds to provide the flexibility and relatively great radiating surface necessary to the adaptation of such tubes to the extensive field of uses such, for example, as for flexible connections, couplings, radiators, etc., but the methods and apparatus proposed for making such tubes either stretch or crush and stretch the metal into folds without twisting the metal, and this twisting I have found to be essential in deeply corrugating tubes. The apparatus which has been proposed and the methods of operation of the same are such that the deeply corrugated tubes desired can not be commercially manufactured, and so far as I am aware, heretofore it has been impossible to commercially manufacture corrugated tubes with folds or corrugations of such depth as to render the tubes really flexible, or provide a relatively great radiating surface.

By the use of apparatus embodying my invention helically corrugated tubes of considerable length may be readily made, the length of the corrugated tube being limited only by the length of the tube to be corrugated, and the corrugations or folds may be of extreme depth so as to provide a pipe of great flexibility and relatively large radiating surface. By means of apparatus made in accordance with my invention, the metal of the tube is folded in such a manner that it is not wrinkled or materially thickened or spun out during the folding process, and by the use of the preferred form of the invention, the wall thickness of the tube remains substantially unchanged during the folding process. These results are made possible by the provision of means for twisting the metal of the tube, and while twisting it pressing upon it along a helical line along which the metal will fold, the pressure being exerted upon the wall of the tube at a progressively shifting short portion thereof and the actual twisting of the metal being localized to substantially the short portion of the tube being pressed upon or the short portion being folded, so that the portion of the tube which has been folded to the desired final form is protected from distortion by the twisting force. The twisting of itself tends to fold the tube by distorting it helically and contracting it longitudinally, and thus greatly reduces the pressure required on the metal to deepen the folds, and if continued after the folds are thus formed, it reduces the pitch of the folds and increases their depth by continuously forcing

the folds around helically analogous to the manner in which a helical spring of a certain pitch and diameter may be reduced in diameter and pitch by slipping it over a rod to prevent buckling, and holding one end down on the rod while twisting the rod and holding the opposite end of the spring from rotation, while permitting it to move along the rod.

In deeply corrugating tubes, I have found that it is of great importance, if not essential, to apply the pressure along the helical line inwardly against the wall of the tube.

When the pressure is exerted from the outside inwardly on the tube to form the folds by displacing the metal inwardly, the diameter of the pressed-in metal is less than that of the original tube; hence there is more than sufficient metal for the circumferential measurement of the folds and the metal does not have to be stretched or spun out in forming the folds as would be the case if the pressure were exerted from the inside outwardly. The metal is pressed inwardly and as a result of this inward pressure, were it not for the twisting of the metal, there would be produced an excess of metal along the helical line of pressure, such as takes place when it is attempted to force the metal of a hollow cylinder or tube inwardly at any point along its length to reduce the diameter at that point; in which event, by being crowded in along the line of reduced diameter, the metal would be caused to wrinkle or pucker. This crowding of the metal would soon limit the depth of the folds if it were not for the twisting force above mentioned; but by producing a twisting force in the tube to actually twist the metal, and while the tube is under such force, pressing inwardly on it along a helical line, the excess metal is displaced helically as it is being forced inwardly so as to keep the wall substantially uniform in thickness during the folding process, permitting the formation of folds of great depth.

The resistance of the metal of a tube to inward pressure is so great that sufficient friction between the corrugating tool and the metal is produced to twist the tube, and because of this resistance the metal can be gripped and drawn together along the length of the tube to form the axial sectional configuration of the folds and otherwise formed into the desired shape without appreciable stretching or spinning of the metal.

My invention will be more readily understood and further objects of the invention will more fully appear from the following description taken in connection with the accompanying drawings, in which—

Figure 1 is a front elevation of the preferred form of apparatus embodying my invention, and showing a tube being corrugated; Fig. 2 is an enlarged view of a part of the mechanism showing the corrugating tool or die partly in section and in position to commence corrugating the tube; Fig. 3 is a view showing the die and a part of the corrugated tube in section; Fig. 4 is a cross-sectional view of the die shown in Fig. 2, taken on line A—A and looking in the direction of the arrows B; Fig. 5 is a fragmentary sectional view showing a modified form of corrugating die in process of operation; Figs. 6, 7, 8 and 9 show different forms of tube corrugated by said machine; Fig. 10 illustrates the manner in which the metal of the tube is twisted or carried around helically as it is being compressed; and Fig. 11 is a diagrammatic illustration.

Referring to the drawings, Fig. 1 is a front elevation of a suitable machine frame 1 having a head stock 2 and a tail stock 3.

4 is a shaft journaled in the head stock 2 and counter pillow block 5 and driven through any suitable means such as pulley 6. The inner end of the shaft is provided with a chuck 7 (Fig. 2) to which is secured the tube 8 to be corrugated or folded, and also an inner support or mandrel 9 which extends through the tube, the tube and mandrel being secured to the chuck by any suitable means such as set bolts 10, 10′, so that they will revolve together with the chuck.

A carriage 11 of suitable construction is slidingly mounted on the frame 1 and is moved longitudinally along the same by means of a screw spindle 12 journaled in the head and tail stocks and driven from shaft 4 through suitable gearing 13, the gearing being arranged like the usual lathe gearing so that the speed of the screw spindle 12 may be varied, depending upon the work to be performed. On the carriage 11 is mounted a suitable chuck 14 of the usual construction, but in which for the usual radially adjustable gripping jaws, are substituted radially adjustable die sections 15, 16, 17, 18. These sections are moved radially by adjusting pins 19 each carrying at its inner end the usual bevel gear meshing with the gear teeth 20 cut on one side of ring 21 on the other side of which are formed the spiral threads 22 which mesh with threads 23 for the purpose of moving the die sections in and out radially to adjust the diameter of the die. The inner ends of these die sections are tapered as shown at 24 in Fig. 4, to permit the desired radial adjustment, and the inner ends of the sections are provided with projections 26, 27, 28, 29 which, when the die sections are assembled, form a thread or helical projection increasing in height and decreasing in pitch toward the finishing end of the die. In the preferred form of the invention as shown herein, the projections of each section of the die consti-

tute longitudinal sections of a continuous thread or helical projection progressively increasing in height and decreasing in pitch, so that when the die is assembled, the projections of the different die sections form such a helical projection.

In the form of the invention herein shown, a hollow tail shaft 30 is provided extending through a sleeve 31 journaled in tail stock 3, the tail shaft being secured at its inner end by a suitable chuck 32 to the rear end of the tube 8. The purpose of this tail shaft is to produce a positive predetermined twist in the tube being corrugated, and for this purpose the tail shaft is rotated at a speed less than the speed of shaft 4, the difference in speeds being such as to produce the desired twist in the tube while it is being folded. This tail shaft may be rotated by any suitable means to produce this result, and in the present form of the invention the shaft is provided with a groove 33 in which fits a suitable feather (not shown) projecting inwardly from the sleeve 31 to cause the shaft to rotate with the sleeve and permitting it to move longitudinally through the sleeve. The sleeve is driven in any suitable manner such, for example, as from screw spindle 12 through gearing 34.

The tail shaft is preferably hollow so that the rear end of the mandrel 9 may extend into it; but any suitable arrangement may be used for driving the rear end of the tube in the same direction as the finishing end, but at less speed; in fact, although less desirable results will be obtained, the additional twisting force which is produced by the rotation of the tail shaft at less speed than the rotation of the finishing end of the tube, may be obtained by gripping the rear end of the tube 8 in any suitable manner to retard its rotation, such, for instance, as by a friction grip which will permit it to be rotated but at less speed than it would be rotated if it were held back simply by the friction of the die.

Referring to Figs. 2 and 3, it will be observed that the helical die teeth or projections are so constructed that the advance projection simply initiates in the tube a helical mark or groove along which the tube is to be folded, and by thus starting a groove in the tube it gives it a line of least resistance along which to fold under the twisting force. It will also be noted that the advance convolution of the helical projection marks out along the length of the tube sufficient metal to form the axial sectional configuration of the desired fold in the ultimate product; that is, the distance between points 36 and 37 is equal to the length of the curved outline between points 38 and 29.

By marking out along the tube sufficient metal to form the sectional outline of a fold of the desired depth and pitch, it is possible to form the desired folds according to my invention without appreciably stretching or spinning out the metal. It will be further observed from inspection of these drawings, that the greatest diameter of the helical thread of the die is the same throughout the length of the thread and is equal to the diameter of the tube to be corrugated. This insures the diameter of the corrugated tube being the same as the original diameter of the tube, since it positively prevents any outward expansion of the tube during the folding process, and the outer surface of the folds may be made to assume an outline depending upon the outline of the grooves between the projections of the die. When a die of this character is used and relative rotation is produced between the tube and the die while the tube is gripped by the die, the friction produced is so great that the tube is twisted, and as the metal of the tube under this twisting force and the relative longitudinal movement between the die and the tube, is drawn through the helical path or groove in the die, the helical line along which the tube is gripped by the advance convolutions of the die is gathered or drawn together in forming the folds. The friction produced by a corrugating tool or die of this character is so great that sufficient friction is obtained for corrugating tubes of certain sizes without the use of any means for retarding the rear end of the tube or for positively driving it at less speed than the front end to produce a positive twisting force. Tubes as large as 3 inches in diameter and with walls a thirty-second of an inch thick, have been successfully corrugated by such dies without any additional retarding force applied at the rear of the tube, but the application of a retarding force at the rear end of the tube makes it possible to utilize a tool having less friction, and whether or not this be taken advantage of, it produces corrugations of greater uniformity and enables tubes of greater wall thickness to be more readily corrugated.

When it is desired to form tubes of a given size but with greater flexibility and larger radiating surface than is possible with the die shown in Figs. 2 and 3, means may be provided for pressing on the folds in a direction longitudinally of the tube while they are being formed so as to bend them lengthwise of the tube as shown in Figs. 5, 8 and 9. This is done in the form of apparatus herein shown (Fig. 5) by gradually turning the edges of the helical projections longitudinally at the finishing end of the die so as to progressively bend the folds longitudinally as they are being deepened. I have found it preferable to commence this longitudinal turning over or bending of the helical projections at about one and a half convolutions from the finishing end of the

die and gradually increasing the bent projection until it is of such length as to give the desired shape to the ultimate fold. While I have shown these projections with bent edges as an integral part of the die sections, obviously they need not be made integral with the remaining part of the sections.

Besides obtaining corrugated tubes of greater flexibility and radiating surface by bending the folds longitudinally as shown in Figs. 5, 8 and 9, the bending of the folds in this manner enables the corrugated tube to be more readily drawn from the mandrel, since the folds, instead of bearing down perpendicularly upon the mandrel, are inclined or so constructed that they will more readily yield when the mandrel is being drawn out.

In the drawings herein shown, the mandrel is of such diameter with respect to the setting of the die, that the last tooth of the die folds the tube down upon the mandrel; but if desired, the finishing tooth or convolution need not come down so close to the mandrel, and the twisting of the tube after it leaves the finishing end of the die may be relied upon to finish the folding of the tube down upon the mandrel.

The operation of the apparatus herein shown and described is as follows: The tube 8 to be folded is preferably, though not necessarily, drawn down to a taper near its forward end so as to fit the taper of the die, and the tube is then slipped over the mandrel and the mandrel and tube are secured in the chuck 7 in any suitable manner so as to rotate together with the chuck. The hollow tail shaft 30 (when one is used) is then pulled forward through the sleeve 31 and after the rear end of the mandrel has been slipped into it, the rear end of the tube 8 is secured in the chuck 32, and the carriage 11 being up at the head of the frame to bring the die in the position shown in Fig. 2, the sections of the die are gradually moved inwardly by turning one of the pins 19 until the helical projection formed by the different projections on the die sections, grips the tube along the tapered portion. If power is now thrown on to rotate shaft 4, the mandrel and front end of the tube will be rotated, and simultaneously therewith the threaded spindle 12 will be rotated to move the carriage along the tube and to rotate the tail shaft and rear end of the tube at a definite predetermined speed less than that at which the forward end of the tube is being rotated so as to positively twist the tube a predetermined definite amount, depending upon the relative rotation between the forward and rear end of the tube. As the die is moved along the tube, the advance point 36 of the helical projection progressively marks or initiates a helical groove in the tube, and the metal marked out by the first convolution of the helical projection, as, for example, the metal between points 36 and 37, is gradually drawn together as the pitch of the helical projection decreases, and since the height of the projection progressively increases as the pitch decreases, the metal along the helical line is gradually and progressively pressed inwardly as the lines along which the tube is gripped by the tool are drawn together; and as the metal is being gradually forced in by the helical projection, the excess metal, due to the reduction in the diameter along this line, is gradually displaced by the twisting force exerted on the tube, as indicated, by way of illustration, by the direction of the arrows in Fig. 10. This twisting force, as previously stated, not only displaces this metal under the inward pressure so as to permit the deepening of the grooves to the desired extent without wrinkling or rupturing the metal, but the twisting of the tube in itself tends to fold the tube helically along the line of least resistance produced by the helical groove initiated in the tube. As the die carriage is moved along the tube, the die progressively marks the tube in this manner and the twisting force is continuously applied as described. The effect of the twisting force in the gradual drawing together of the metal of the tube into helical folds may be illustrated, in a way, by reference to Fig. 11, in which 45 is a rod or mandrel to the end 46 of which is secured a helical spring or piece of spring wire which is wound around the rod with a progressively increasing pitch from the end 46. If it is attempted to draw the convolutions of the spring toward end 46 so as to decrease the pitch of the longer convolutions as shown at the end 46 of the mandrel without rotating the mandrel or the free end of the spring, as the convolutions say at points 47 and 48, are gripped and drawn together, the convolutions of the spring between these points will rise from the mandrel as shown in dotted lines; but by gripping the convolutions at the free end of the spring so as to hold them from rotation, then rotating the rod in the direction shown by the arrow 49, and gradually drawing the convolutions together toward end 46, the spring will be folded down firmly upon the rod in the desired decreased pitch without increasing its diameter and without any tendency to buckle out of the desired form of the spring. During this rotation of the rod the spring will actually slide along and move around the mandrel in a helical line as indicated by the arrows 50. In a somewhat similar manner, when a tube is being folded by apparatus embodying my invention, the twisting force applied actually displaces or carries the metal around helically so that the resulting corrugated tube formed under the twisting force is actually slightly longer

than the tube would have been if it could have had similar corrugations formed in it without the twisting force.

The amount that the tube may be twisted in forming the folds may be varied in several ways such as by varying the relative rate of rotation of the advance and rear ends of the tube, or by varying the pitch of the die relative to that of screw shaft 12, or the speeds of the shafts 4 and 12.

In practice I have found that it is very important to provide a support for the tube being corrugated, such, for example, as the mandrel. Such a support is an important feature in regulating the action of the twisting force on the folds, and by the regulation of this force, folds of the desired configuration and size may be formed. For example, when the finished folds are brought down firmly upon the support and only sufficient relative rotation between the shafts 4 and 30 is produced to displace the metal as it is being pressed upon by the die, or to bring the folds down upon the support after they leave the die, where the support is of less diameter than the die, the friction between the folds and the support is sufficient to prevent relative rotation between the support and the folds which have been forced firmly into engagement therewith, so that the support will serve to localize the twisting force in the tube by transmitting the force from the chuck to the portion of the tube being folded down upon the support. By reason of this the folds that have been brought firmly into engagement with the support are protected from further effects of the twisting force, so that the tube may be deeply corrugated under the twisting force and the pressure of the die, without crowding together the folds after they have been forced down firmly into engagement with the support. If, however, it is desired to force the folds more or less together to change the sectional configuration of the same, and to decrease their pitch after they have been forced firmly into engagement with the support, this may be done by decreasing the longitudinal travel of the die with respect to the pitch of its helix. I have found that without a suitable support, the tube under the twisting force necessary to deeply corrugate it, will twist up and buckle, since only a very short length of tube can transmit the twisting force necessary to overcome the friction of the die without being distorted; and again the corrugations formed would, under such force, likewise be twisted and distorted out of the desired shape and size.

In Fig. 6 the dotted helical line 52 represents the seam of the original tube which was corrugated, and illustrates the relative amount of twist in the corrugated tube for a given length. If, in corrugating tubes in the shape shown in Fig. 6, the shaft 4 should be driven at 38 revolutions per minute and the tail shaft 30 at 32 revolutions, there would be a difference of 6 revolutions representing 6 complete twists in the tube per minute, and if the pitch of the screw shaft 12 and the corrugated pipe 8 is ¼ inch, the corrugated tube will have been completely twisted 6 times for every 9½ inches.

Fig. 7 shows the matter in which the folds or corrugations are forced together when the relative diameters of the die and the mandrel are such that there is a clearance between the folds of the tube and the mandrel as the folds leave the die, in which case the twisting force due to the relative rotation of the mandrel with respect to the die, will further twist the corrugated tube until the folds are drawn by the twisting force firmly together, as shown in Fig. 7, or this crowding of the folds may be obtained in another way, as previously stated, by decreasing the speed of the shaft 12.

Fig. 8 shows one form in which tubes may be corrugated with a die having a portion of its projection near the finishing end bent longitudinally in the direction of the axis of the tube somewhat in the manner shown in Fig. 5, but the teeth or projections of the die being so formed that one wall of each finished fold is upright while the other wall of the fold is bent in such manner that each fold overhangs on one side the adjacent groove; whereas, in Fig. 9 the entire fold droops over to one side.

In referring to the helical contour or thread of the tool or die, I have used the terms "helix," "helical projection" and "helical projections" somewhat synonymously and interchangeably, because the projections of the tool or die sections, when assembled, form a continuous helical projection; and in so far as the principle of my invention is concerned, it may be regarded as a unitary solid helical projection, or as composed of a greater or less number of projections than those herein shown. For convenience of description, I have also used the terms "folds" and "each fold" in referring to the corrugated or folded tube, since each convolution of the helically folded tube may be considered as a fold.

While I have shown and described in detail apparatus which embodies my invention in its most efficient form, it will be obvious to those skilled in the art that various changes and modifications may be made not only in the tool or die, but in the machine as a whole, without departing from the scope and spirit of the invention, and I do not wish to be understood as limiting myself other than as indicated in the appended claims.

I make no claim herein to my new method

of corrugating or folding tubing herein described, or to the new product which may be made according to the method and apparatus herein described, since the method and product are respectively the subject matter of my co-pending applications Serial No. 741,387 and Serial No. 741,388 filed on even date herewith.

I claim—

1. A tool for corrugating tubes provided with an opening having an internal thread of a plurality of convolutions decreasing in pitch and increasing in depth toward the finishing end of the tool, the maximum inner diameter of the tool being substantially the same throughout its length to limit the outer diameter of the corrugated tube.

2. A tool for corrugating tubes having an inner helical projection of a plurality of convolutions decreasing in pitch and increasing in height toward the finishing end forming with the wall of the tool a helical groove of decreasing width toward the finishing end, the inner diameter of the tool along the helical groove being substantially uniform throughout.

3. A tool for corrugating tubes having an inner helical projection of a plurality of convolutions decreasing in pitch and increasing in height toward the finishing end forming with the wall of the tool a helical groove of decreasing width toward the finishing end, the distance between adjacent edges of the helical projection measured along the bottom or arch of the groove being substantially uniform throughout the tool.

4. A tool for corrugating tubes comprising a plurality of radially adjustable sections each provided with projections adapted, when assembled, to form a thread of decreasing pitch and increasing depth toward the finishing end thereof for gripping the tube to fold it.

5. A tool for corrugating tubes comprising a plurality of radially adjustable sections each provided with longitudinal sections of a helical projection, of a plurality of convolutions adapted, when assembled, to form a helical projection decreasing in pitch and increasing in height toward the finishing end thereof.

6. A tool for corrugating tubes comprising a plurality of radially adjustable sections each provided along its inner surface with longitudinal sections of a continuous inner helical projection of a plurality of convolutions decreasing in pitch and increasing in height adapted, when assembled, to form such a projection.

7. A tool for corrugating tubes having a plurality of radially adjustable sections each provided with longitudinal sections of an internal thread having a plurality of convolutions decreasing in pitch and increasing in depth adapted, when assembled, to form such a thread, the bottom diameter of the thread being constant throughout its length to limit the outer diameter of the corrugated tube.

8. In a machine for corrugating tubes, the combination of a die comprising a plurality of radially adjustable longitudinal sections having formed thereon longitudinal sections of a thread of decreasing pitch and increasing depth adapted, when assembled, to form a thread of decreasing pitch and increasing depth toward the finishing end, and means operatively connecting said sections whereby they may be simultaneously adjusted radially.

9. In a machine for corrugating tubes, the combination of a die comprising a plurality of radially adjustable longitudinal sections having formed along their inner surfaces longitudinal sections of a thread of decreasing pitch and increasing depth adapted, when assembled, to form a thread of decreasing pitch and increasing depth toward the finishing end, and means operatively connecting said sections whereby they may be simultaneously adjusted radially.

10. A tool for corrugating tubes provided with a helix of decreasing pitch toward the finishing end thereof for gripping the tube helically to fold it into helical folds, the finishing end of the helix of the tool being inclined longitudinally of the axis of the tool to press a wall of each fold longitudinally in the same direction.

11. A tool for corrugating tubes provided with projections arranged to form a helix of decreasing pitch and increasing height toward the finishing end thereof for gripping the tube to fold it helically, one or more of the projections at the finishing end of the helix of the tool being inclined longitudinally of the axis of the tool so as to press the helical folds longitudinally.

12. A tool for corrugating tubes provided with a helical projection of a plurality of convolutions decreasing in pitch and increasing in height toward the finishing end thereof for gripping the tube to gradually fold it helically, the finishing end of the helical projection being progressively bent longitudinally of the axis of the tool to bend the folds of the tube longitudinally while being formed.

13. A tool for corrugating tubes provided with an inner helical projection of a plurality of convolutions decreasing in pitch and increasing in height toward the finishing end thereof for gripping the tube to gradually fold it helically, the edge of the helical projection along a portion of its length being progressively bent over longitudinally of the axis of the tool as the pro-

jection increases in length so that the inner folds of the tube are progressively laid over longitudinally while being deepened.

14. In a machine for corrugating tubes, the combination of a tool having an internal thread of progressively decreasing pitch and increasing depth toward its finishing end for gripping the metal, means for causing relative rotation between said tool and tube to twist the tube, and means for producing relative longitudinal movement between said tool and said tube, whereby the tube is progressively gripped and the gripped metal drawn together into helical folds.

15. In a machine for corrugating tubes, the combination of a die having an internal thread of decreasing pitch toward its finishing end for gripping a tube, means producing relative rotation between the tube and die to twist the tube to cause it to be gathered into helical folds by said die, and means inside said tube for limiting the depth of the folds formed.

16. In a machine for corrugating tubes, the combination of a tool having an opening with corrugated walls for gripping a tube, said corrugations progressively decreasing in pitch and increasing in depth toward the finishing end of the tool, a mandrel extending within the opening and upon which the tube is folded down, means for rotating the mandrel and tube to cause the tube to be twisted by the gripping tool until it is folded down on the mandrel, and means for moving said tool longitudinally of the tube, whereby the tube is progressively gripped and the gripped metal drawn down into helical folds on the mandrel.

17. In a machine for corrugating tubes, the combination of a smooth mandrel to which a tube is secured at one end to rotate therewith, a die surrounding the tube and mandrel and having an internal helical projection decreasing in pitch and increasing in height toward the finishing end thereof for gripping the outer surface of the tube, and means for rotating the mandrel to twist the tube through the die and fold it helically upon the mandrel.

18. In a machine for corrugating tubes, the combination of a die having an internal helical projection decreasing in pitch toward the finishing end thereof for gripping the outer surface of a tube, and means for twisting the tube through the die, said means including a mandrel of the diameter of the finished tube extending within the die and upon which the tube is folded down, whereby, after a portion of the tube has been folded down on the mandrel, the twisting force is transmitted through the mandrel to the portion of the tube being folded.

19. In a machine for corrugating tubes, the combination of means for pressing upon the tube along a helical line, means for rotating one end of the tube relative to the other so as to actually twist the metal of the tube, and means coöperating with said pressing means for localizing the twisting of the metal to the progressively shifting short length of the tube where pressure is applied.

20. In a machine for corrugating tubes, the combination of means for pressing upon the tube along a helical line, means coöperating therewith for producing relative rotation between the tube and said pressing means to produce a twisting force in the tube, and means for localizing the actual twisting of the metal of the tube to a progressively shifting short length of the tube being folded.

21. In a machine for corrugating tubes, the combination of means for rotating the advance end of a tube, means for retarding the rotation of the rear end so as to twist the tube, and means for progressively pressing upon the tube along a helical line while it is being twisted, whereby the tube is gradually gathered into helical folds.

22. In a machine for corrugating tubes, the combination of means for simultaneously rotating the ends of a tube in the same direction at different speeds to produce a twisting force in the tube, and means for initiating a helical groove in the tube of decreasing pitch and guiding the metal under the twisting force into helical folds.

23. In a machine for corrugating tubes, the combination of means for simultaneously rotating the ends of a tube in the same direction at a constant predetermined difference in speeds to produce a twisting force in the tube, and a die having a helical projection decreasing in pitch and increasing in height toward the finishing end thereof to initiate a helical groove in the tube and draw together the grooved metal under the twisting force into helical folds.

24. In a machine for corrugating flexible tubes, the combination of a die having an internal helical projection decreasing in pitch toward the finishing end thereof for gripping the outer surface of a tube, a mandrel extending within the die for receiving the tube, from which the tube may be drawn longitudinally and to which the advance end of the tube is secured, means for rotating the mandrel, means to which the rear end of the tube is secured from relative rotation with respect thereto, but permitting the tube to be drawn in by the die, means for rotating said securing means at less speed than the mandrel; and means for moving the die along the tube, whereby the tube is folded helically about the mandrel.

25. In a machine for corrugating tubes, the combination of means for rotating a tube and means for gripping the outer sur-

face of the rotating tube helically and gradually gathering the metal of the tube into helical folds and bending said folds longitudinally.

26. In a machine for corrugating tubes, the combination of a helix of decreasing pitch for gripping a tube, means for producing relative rotation between the tube and the helix to cause the tube to be progressively corrugated helically, and means at the finishing end of the corrugating helix for engaging the folds of the corrugated tube to bend them longitudinally.

27. In a machine for corrugating tubes, the combination of a tool movable relatively to the tube adapted to press upon the tube along a helical line, and means for twisting the tube while it is being pressed upon by the tool by producing relative rotation between the tool and the advanced end of the tube.

28. In a machine for corrugating tubes, the combination of a die having a helical projection decreasing in pitch and increasing in height toward its finishing end adapted to press upon the tube, and means for producing relative rotation and longitudinal movement between the tube and the die to twist the tube and draw the metal together into helical folds.

In testimony whereof, I have signed my name to this specification, in the presence of two subscribing witnesses.

LOUIS H. BRINKMAN.

Witnesses:
EDWIN SEGER,
SAMUEL M. WARD, Jr.