United States Patent [19]

Saito et al.

[11] **3,828,546**

[45] **Aug. 13, 1974**

[54] **SETTING MEANS FOR TIME ZONE WATCH WITH CALENDAR DISPLAY**

[75] Inventors: **Toshiaki Saito,** Suwa; **Hisashi Kobaysshi,** Okaya, both of Japan

[73] Assignee: **Kabusiki Kaisha Suwa Seikosha,** Tokyo, Japan

[22] Filed: **Mar. 26, 1973**

[21] Appl. No.: **344,616**

Related U.S. Application Data

[62] Division of Ser. No. 222,261, Jan. 31, 1972.

[30] **Foreign Application Priority Data**

Feb. 3, 1971 Japan 46-3770

[52] **U.S. Cl.** **58/42.5,** 58/58

[51] **Int. Cl.** **G04b 19/22,** G04b 19/24

[58] **Field of Search** 58/42.5, 58, 85.5

[56] **References Cited**

UNITED STATES PATENTS

3,358,437	12/1967	Burg	58/85.5 X
3,382,666	5/1968	Gerry	58/42.5
3,611,703	10/1971	Borel	58/85.5 X
3,691,756	9/1972	Ono	58/58

Primary Examiner—George H. Miller, Jr.
Attorney, Agent, or Firm—Robert E. Burns; Emmanuel J. Lobato; Bruce L. Adams

[57] **ABSTRACT**

A correction device for a watch having a plurality of adjustable time displays utilizes a single control element extending externally of the watch and adapted to be manually operated to adjust the plurality of time displays. Operating means operatively associates each of the adjustable time displays with the control element whereby the latter is operable to adjust each of the time displays. By way of example, the control element may be used to adjust a first time display indicating local time and a second time display indicating the hour in a time zone other than that in which the wearer of the watch is located.

3 Claims, 4 Drawing Figures

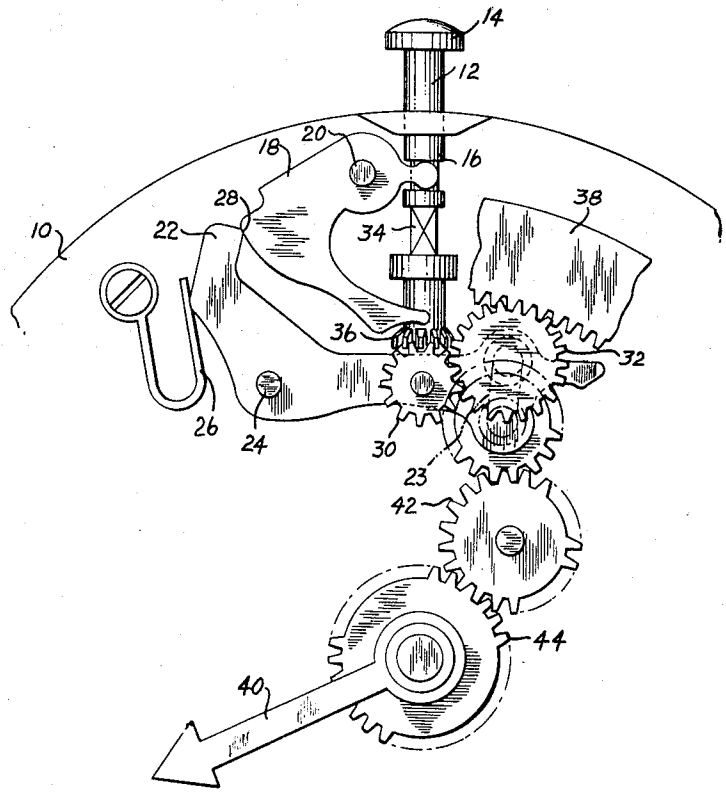

FIG. 1

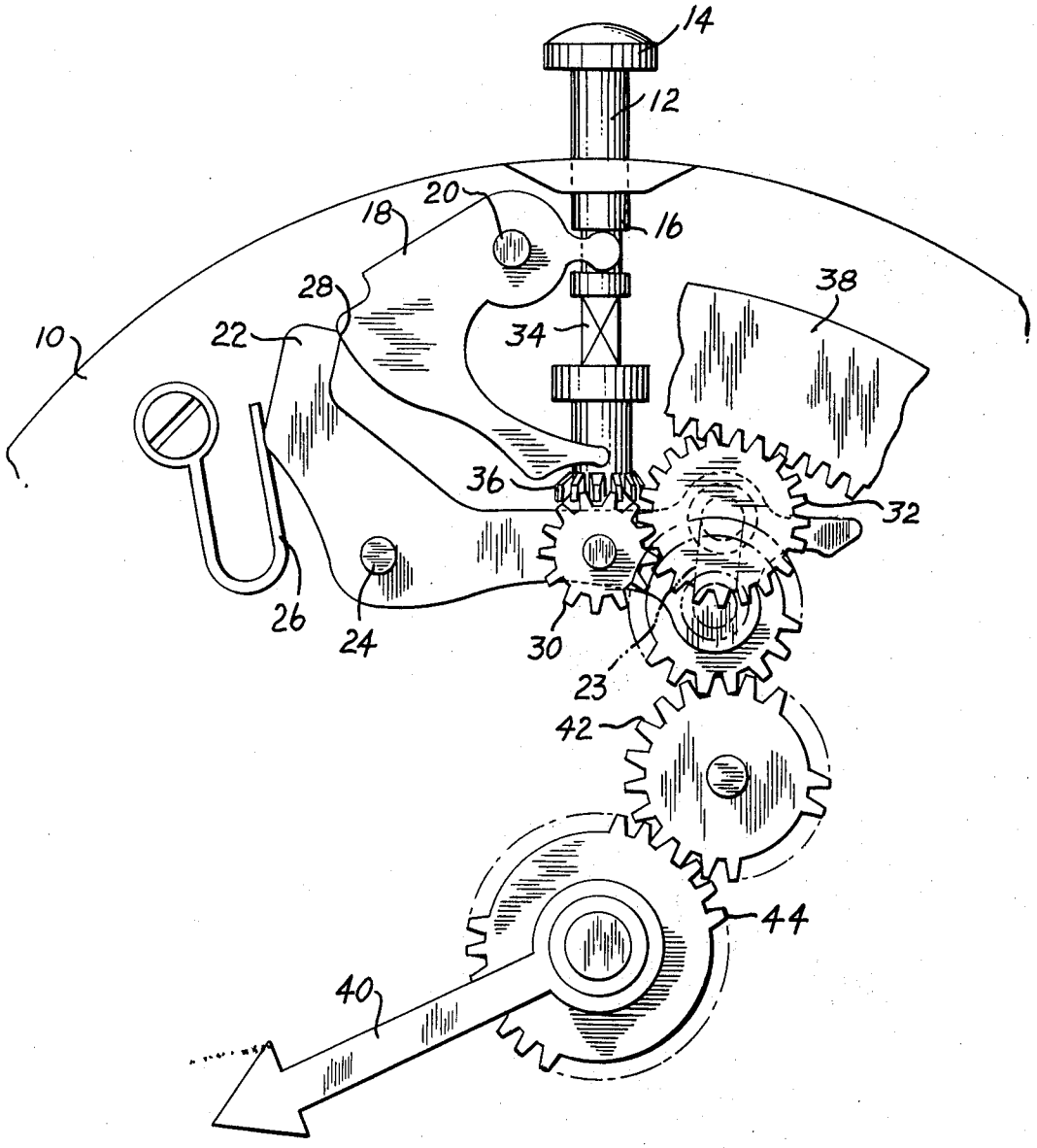

FIG. 2

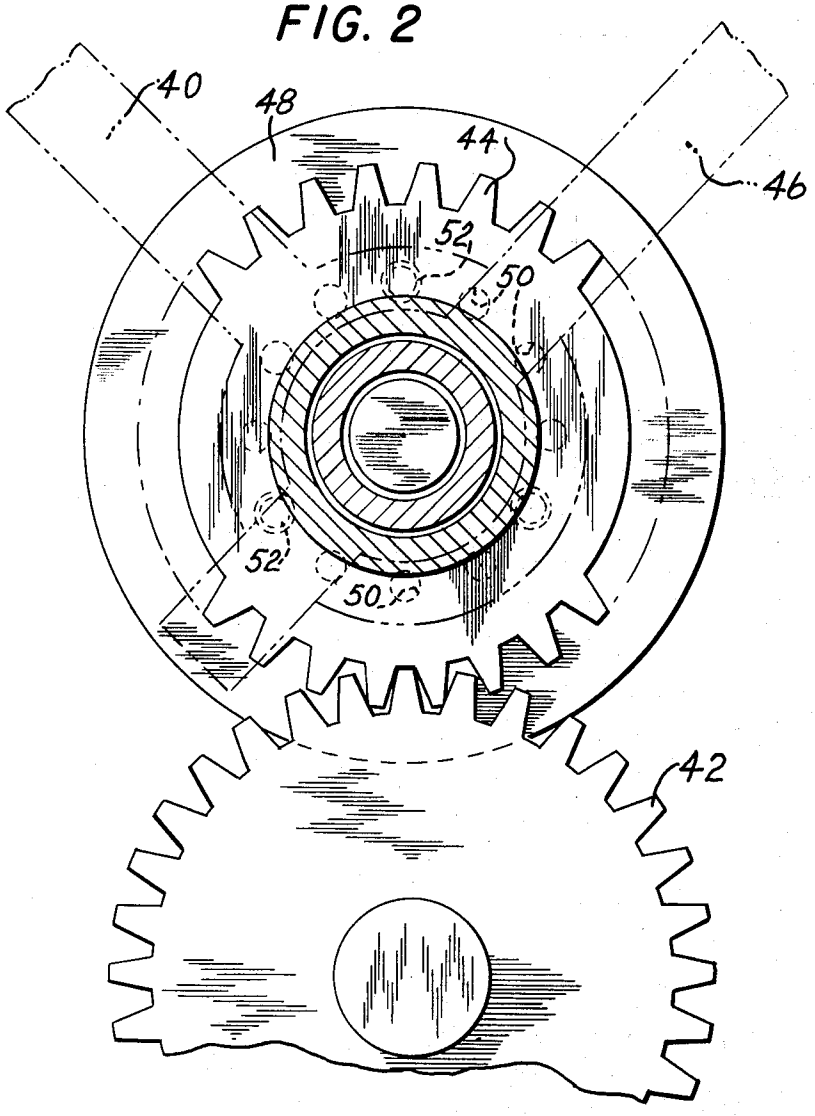

FIG. 3

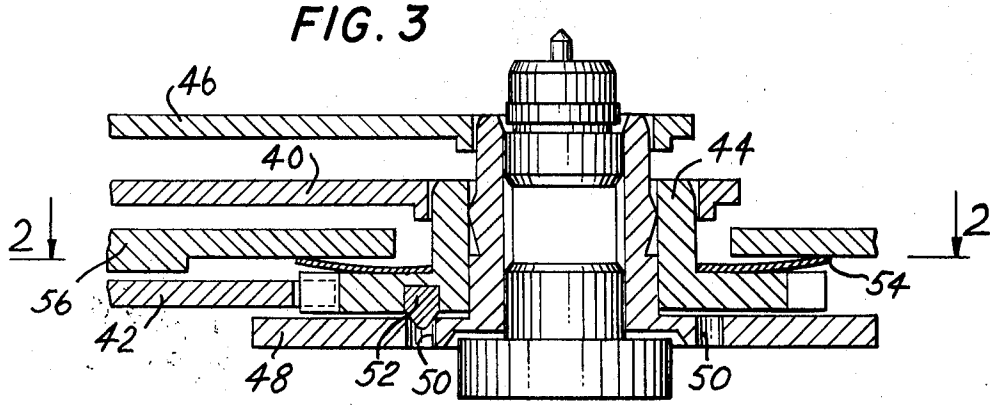

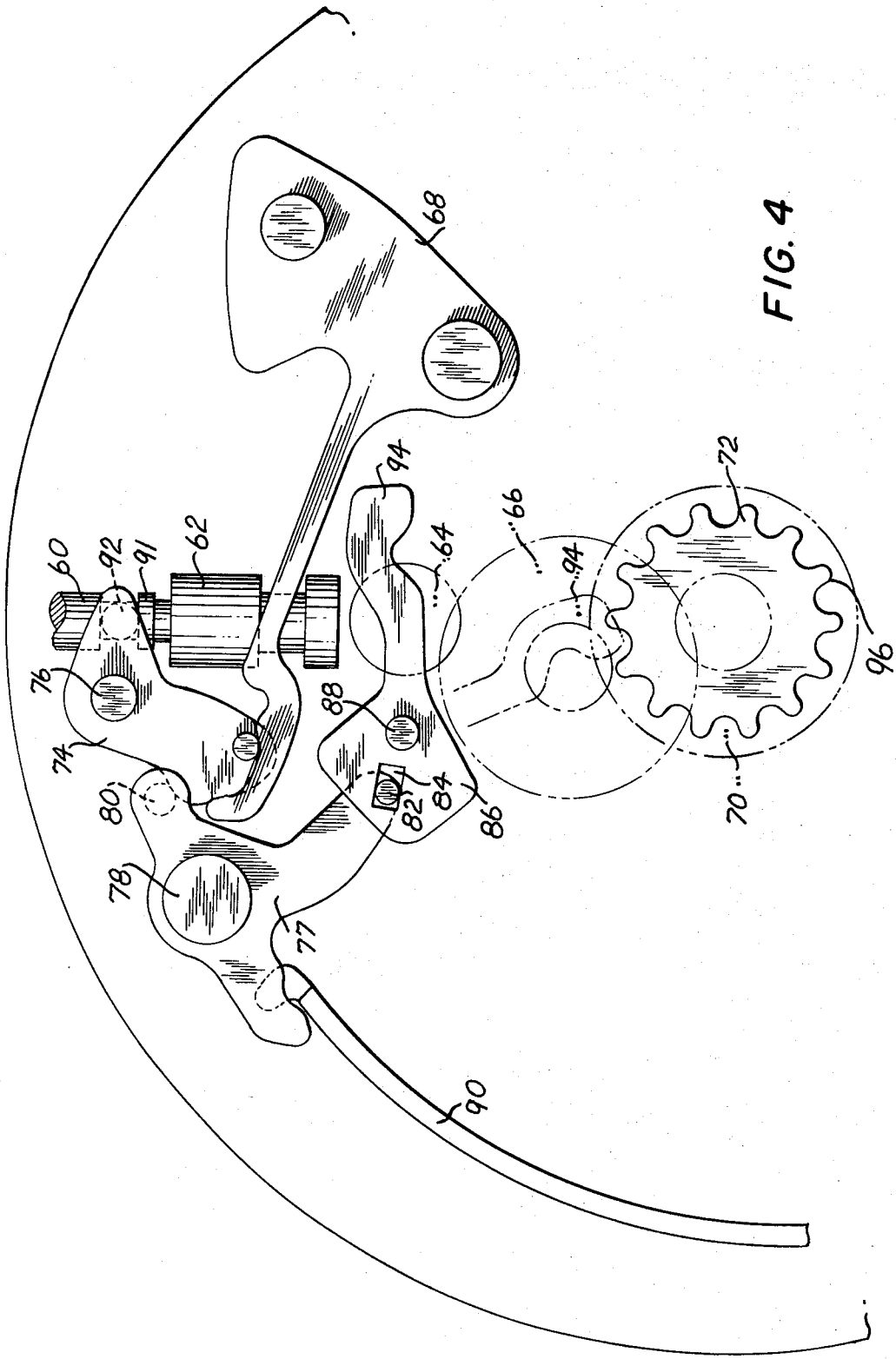

FIG. 4

SETTING MEANS FOR TIME ZONE WATCH WITH CALENDAR DISPLAY

This is a division, of application Ser. No. 222,261, filed Jan. 31, 1972.

BACKGROUND OF THE INVENTION

This invention relates to a time correction device for a watch having a plurality of time displays. The invention is particularly adaptable for use on a watch having a first hour hand indicating local time and a second hour hand indicating the time in another time zone other than that in which the user of the watch is located.

Watches having two hour hands are generally well-known. As world wide travel has progressed through the advent of air travel, this type of watch has become in greater demand. Thus, a traveler to a foreign country will find it convient to view his watch and read the local time as well as the time in his native country.

Heretofore, one known watch of this type has employed two winding stems for correcting the two time displays, that is, one stem for correcting the local time and another stem for changing the time of the second hour hand which indicates the time in another time zone. A watch employing more than one protruding stem is not particularly attractive and it would be desirable to avoid the use of two stems. In addition, it is more difficult to waterproof a watch having two rotatable stems protruding from the watch casing.

Accordingly, it is an object of the present invention to provide a correction device for a watch having a plurality of time displays and which employs a single control element or stem for adjusting all of the time displays.

Another object of the invention is to provide an operating mechanism for adjusting a watch with a plurality of time displays wherein the operating mechanism employs a control element which is operable to adjust the various time displays by rotation and displacement of the control element depending upon the particular time display to be adjusted.

A further object is to provide a correction device for a watch which is of a simplified construction and which is inexpensive to manufacture in accordance with mass production manufacturing techniques.

DESCRIPTION OF THE DRAWINGS

Other features and advantages of the invention will be better understood from the following description of examples of the invention, appended claims and drawings in which:

FIG. **1** is a partial diagrammatic view of the operating mechanism of a time correction device according to one embodiment of the invention.

FIG. **2** is an enlarged diagrammatic plan view of the clutch mechanism used in the FIG. **1** embodiment.

FIG. **3** is a partial section view of the clutch mechanism.

FIG. **4** is a partial diagrammatic view of the operation mechanism of a time correction device according to an alternate embodiment of the invention.

DESCRIPTION OF THE PREFERRED EMBODIMENTS

Referring to the drawings FIG. **1** shows a portion of a watch **10** having a stem **12** which passes outside of the watch casing and which has a knob **14** adapted to be manually manipulated to adjust the watch. The stem **12** is mounted for rotation and also for longitudinal displacement to effect the desired adjustment as will be further described.

The stem **12** has an annular groove **16** which receives the end portion of a setting lever **18**, the latter in turn being pivotally mounted at **20**. The arrangement is such that when the stem **12** is moved longitudinally in and out, the setting lever **18** will be pivoted clockwise and counterclockwise respectively, as the end portion of lever **18** is engaged by the sides of the annular groove **16**.

A setting gear lever **22** which is operatively associated with setting lever **18** is pivotally supported at **24**. Thus, a spring **26** which is in contact with setting gear lever **22** normally biases the latter in a clockwise direction about pivot support **24** whereby the upper leg of setting gear lever **22** is biased into contact with the setting lever **18** as indicated **28** in FIG. **1**. The setting gear lever **22** rotatably mounts a setting gear **30** which meshes with a correction gear **32**. The setting gear lever **22** has an opening **23** in which the support for the correction gear **32** is mounted whereby the latter may be displaced along the opening **23** between the upper and lower positions shown in FIG. **1** as will be further described.

The stem **12** has a section **34** which has a square cross section and which is mounted for sliding movement in a corresponding square opening in a clutch gear **36**. The clutch gear **36** meshes with the setting gear **30** and the latter in turn meshes with the correction gear **32**. The stem **12** is adapted to be displaced longitudinally to the position shown in FIG. **1** wherein the stem **12** is operable to be rotated in one direction to adjust a calender wheel **38** (partially shown) and in another direction to adjust a second hour hand **40**.

Thus, in the calender correcting position as shown in FIG. **1**, when the stem **12** is rotated clockwise (as viewed from the top) the clutch gear **36** will engage the setting gear **30** which in turn engages the correction gear **32**. As the latter is initially rotated clockwise by the setting gear **30**, the correction gear **32** will ride up in the opening **23** to the upper position shown in FIG. **1** whereupon, the correction gear **32** will engage the gear teeth on the calender wheel **38** to rotate the latter.

When the stem **12** is rotated in a counterclockwise direction (as viewed from the top in FIG. **1**) the clutch gear **36** will engage the setting gear **30** which in turn engages the correction gear **32**. As the latter is initially rotated counterclockwsie by the setting gear **30**, the correction gear **32** will ride down in the opening **23** to the lower position shown in FIG. **1** whereupon the correction gear **32** will engage a correction transmission gear **42** which in turn engages a second hour gear **44** on which the second hour hand **40** is mounted. Thus, it will be seen that with the stem **12** in the position shown in FIG. **1**, rotation of the stem **12** is one direction will adjust the calender wheel **38** and rotation in the opposite direction will adjust the second hour hand **40**.

When it is desired to adjust the conventional first hour hand and minute hand on the watch, the stem **12** is longitudinally displaced from the position shown in FIG. **1**, whereupon the setting lever **18** and setting gear lever **22** are rocked out of position to disengage the stem **12** from operative relationship with the correction

gear 32 whereupon the stem 12 may be rotated independently of correction gear 32 to adjust the first hour hand and minute hand by conventional means (not shown).

A clutch mechanism which permits independent adjustment of the second hour hand 40 is shown in FIGS. 2 and 3. The second hour hand 40 is carried on the second hour gear 44. A first hour hand 46 is carried on a first hour gear 48. The first hour gear 48 is provided with a plurality of holes 50. In the drawing, there are twelve holes 50 shown at circumferentially spaced intervals of thirty degress. The second hour gear 44 carries pins 52 which are also circumferentially spaced at intervals of thirty degrees. The holes 50 and pins 52 are disposed along the same circumferential diameter so that the holes 50 are in general alignment with the pins 52. A spring 54 disposed between a dial 56 and the second hour gear 44 urges the first and second hour gears 48, 44; respectively, towards one another in a biasing relationship. The first hour gear 48 is operative associated with a conventional minute gear train (not shown in the drawings).

It will be observed in FIG. 3 that the lower ends of the pins 52 are tapered. Thus, it will be apparent that when the second hour gear 44 is rotated by the correction transmission gear 42 as previously explained, the second hour gear 44 will be longitudinally displaced slightly so that the pins 52 will come out of their respective holes 50 until the second hour gear 44 has been rotated thirty degrees whereupon the second hour gear 44 will return to its initial longitudinal position and the pins 52 will fall into the next set of corresponding holes 50. In this regard, it will be observed, that during rotation of the second hour gear 44 as just described, the second hour gear 44 will be displaced slightly axially against the bias of spring 54 as the turning force applied to the second hour gear 44 causes the sloping ends of the pins 52 to engage the edges of the holes 50 and thereupon ride out of the respective hole 50.

Thus, it will be seen that the second hour hand 40 may be adjusted by the knob 14 on stem 12 without affecting the position of the first hour hand 46. On the other hand, when the first hour hand 46 is adjusted, the second hour hand 44 is rotated therewith because the spring 54 continues to urge the pines 52 into the respective openings 50.

FIG. 4 shows an alternate embodiment wherein a stem 60, clutch gear 62, setting gear 64, minute gear 66 and clutch lever spring 68 are arranged in a conventional manner.

A first hour gear 70 and a second hour gear 72 are arranged coaxially and arranged with a clutch mechanism therebetween as described in the previous embodiment. A setting lever 74 is pivotally mounted at 76. A correction transmitting lever 77 pivotally mounted at 78 is provided with a pin 80 which engages the setting lever 74 and a pin 82 which engages an opening 84 in a correcting finger 86. The correcting finger 86 is pivoted at 88. A correction transmitting lever spring 90 normally biases correction transmission lever 77 in a clockwise direction as viewed in FIG. 4.

In FIG. 4, the stem 60 is shown in a neutral position. If the stem 60 is pushed in from the neutral position, the setting lever 74 will be rocked clockwise as the edges of an annular groove 91 in stem 60 engages a pin 92 on setting lever 74. Rocking setting lever 74 clockwise will cause correction transmitting lever 77 to rock counterclockwise and correction finger 86 to rock clockwise so that the end 94 of correction finger 86 will be displaced from the position shown in full lines in FIG. 4 to the position shown in broken lines in FIG. 4. In being so displaced the end 94 of correction finger 86 will engage the teeth 96 on the second hour gear 72 to thereby rotate the latter the desired increment, for example, thirty degrees which corresponds to one hour on a normal watch dial.

When the stem 60 is released the springs will cause the various parts to return to the neutral position, that is the position shown in FIG. 4. Depressing the stem 60 once again will, of course, cause the operation to repeat whereby the second hour gear 72 is advanced another desired increment.

From the above description it will be seen that a plurality of time displays may be corrected by a single operating element or stem. Thus, in one position of the stem, the latter may be rotated in one direction to adjust the calender wheel, and while still in the same longitudinal position, rotated in the opposite direction to adjust the second hour hand, that is, the hour hand which indicates the hour in a locality other than that in which the user of the watch is located. When the stem is longitudinally displaced from the last mentioned position, the operative relationship between the stem and the calender wheel and the second hour hand is disengaged and the stem may be rotated to adjust the local time, that is to adjust the hour and minute hand indicating the local time.

One advantage of the construction and arrangement described above is that by using only a single stem, it is possible to reduce the likelihood of damage to the watch due to moisture or water. In this regard it is pointed out that entry of water into a watch most frequently occurs through the stem. Thus, where there is only one stem, there is less likelihood that moisture or water will enter into the casing of the watch. Thus the use of a single stem improves the water resistance of the watch and also simplifies the structure of the watch casing.

The stem in the watch of the present invention may be longitudinally displaced into three different positions or steps wherein in the second step, the second hour hand is adjusted and in the third step the first hour hand is adjusted. When the latter adjustment is made the second hour hand rotates with the first hour hand. Thus, in the case of a high precision watch such as a quartz crystal watch, the wearer has only to pull the stem to the second step when correcting the time during travelling abroad. The watch may be constructed so that a clicking sound will be given off when the stem is moved from one position to the other. In this way, it will be easier to determine the longitudinal position of the stem and the particular adjustment for which the stem is about to be made. The clicking sound or resistance to longitudinal displacement of the stem may be greater in passing from one position than to another.

It will be observed that when correcting the second hour hand, the watch continues to run without interruption so that there is no lost time on the watch when this adjustment of the second hour hand is being made. In the present invention, in one position of the stem, the latter is rotated in one direction to adjust the calendar, and in the opposite direction to adjust the second hour hand. When the stem is displaced longitudinally

in another position, the watch may be adjusted in a conventional manner.

Due to utilizing reverse rotation of calendar correction and reciprocation of the stem, the second time display can be adjusted independently of conventional hand setting or in case of a watch which is wound by rotating the stem, independently of the winding operation.

What is claimed is:

1. A correction device for a watch having two adjustable time displays, comprising a control element extending externally of said watch and adapted to be manually manipulated to adjust said time displays, and operating means operatively associating each of said adjustable time displays with said control element whereby the latter is operable to adjust each of said time displays, wherein said watch is provided with a calendar wheel, said operable means operatively associating said control element with said calendar wheel and with one of said two displays so that when the control element is rotated in one direction, the calendar wheel will be rotated and when the control element is rotated in the opposite direction, said one time display will be adjusted.

2. A correction device according to claim **1** wherein said operating means comprises a lever, means operatively connected between said lever and said control element to pivot said lever when said control element is longitudinally displaced, said lever mounting a setting gear rotatable by said control element, and a correction gear displaceable relative to said lever for adjusting a calender wheel and one of said time displays.

3. A correction device for a watch according to claim **2,** wherein said correction gear is disposed between said calender wheel and a correction transmission gear which adjusts said one time display, said correction gear being arranged so that when the latter is rotated in one direction the correction gear will be displaced to engage said calender wheel to rotate the latter and when the correction gear is rotated in the opposite direction, the correction wheel will be displaced to engage said correction transmission gear to rotate the latter.

* * * * *