Aug. 9, 1966 J. A. DURNBAUGH ET AL 3,265,419

CABINET STRUCTURE

Filed Dec. 30, 1963 2 Sheets-Sheet 1

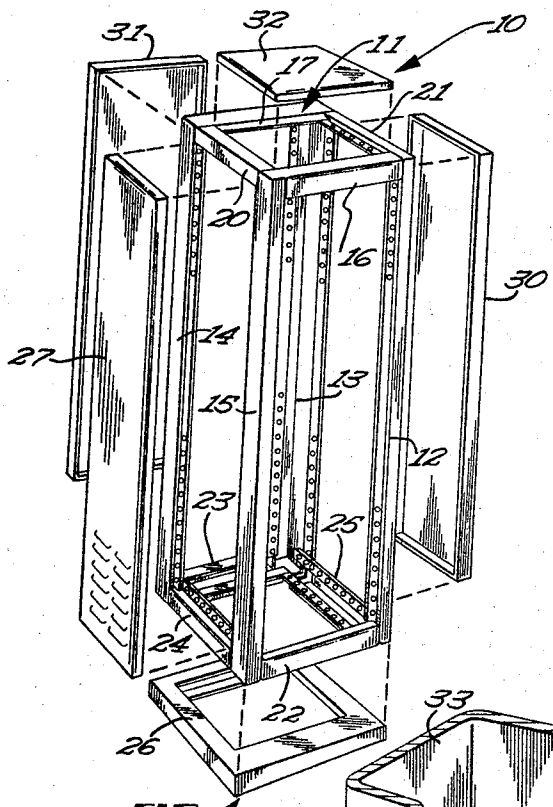

FIG 1

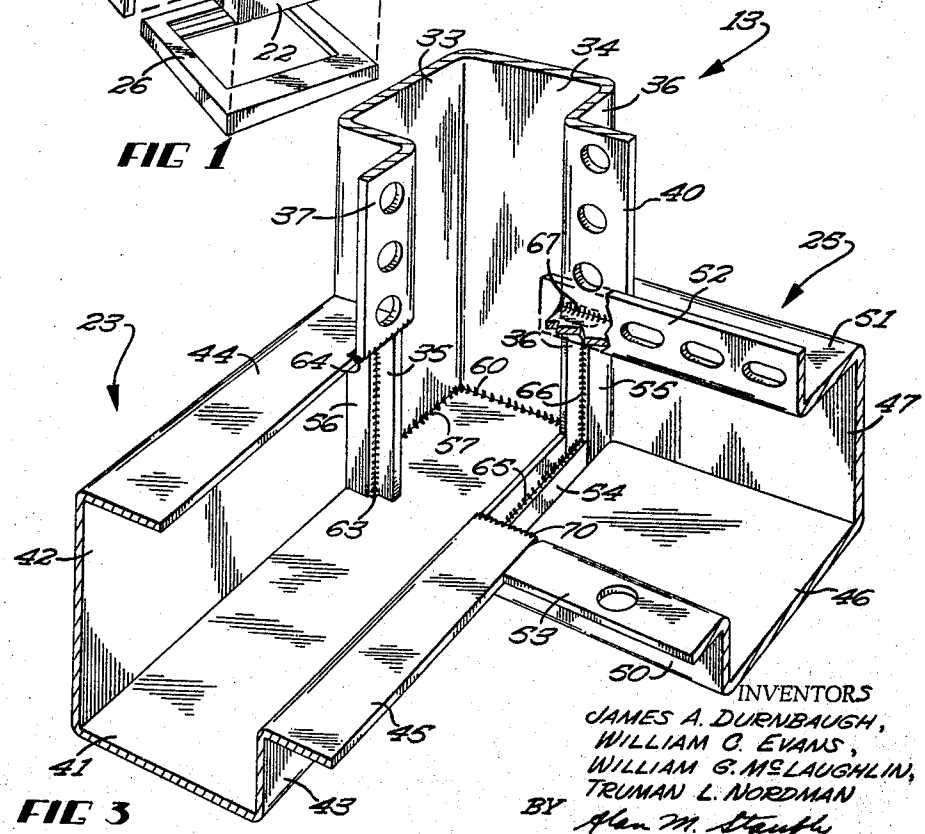

FIG 3

INVENTORS
JAMES A. DURNBAUGH,
WILLIAM O. EVANS,
WILLIAM G. McLAUGHLIN,
TRUMAN L. NORDMAN
BY Glen M. Stauffer
ATTORNEY

Aug. 9, 1966 J. A. DURNBAUGH ET AL 3,265,419

CABINET STRUCTURE

Filed Dec. 30, 1963 2 Sheets-Sheet 2

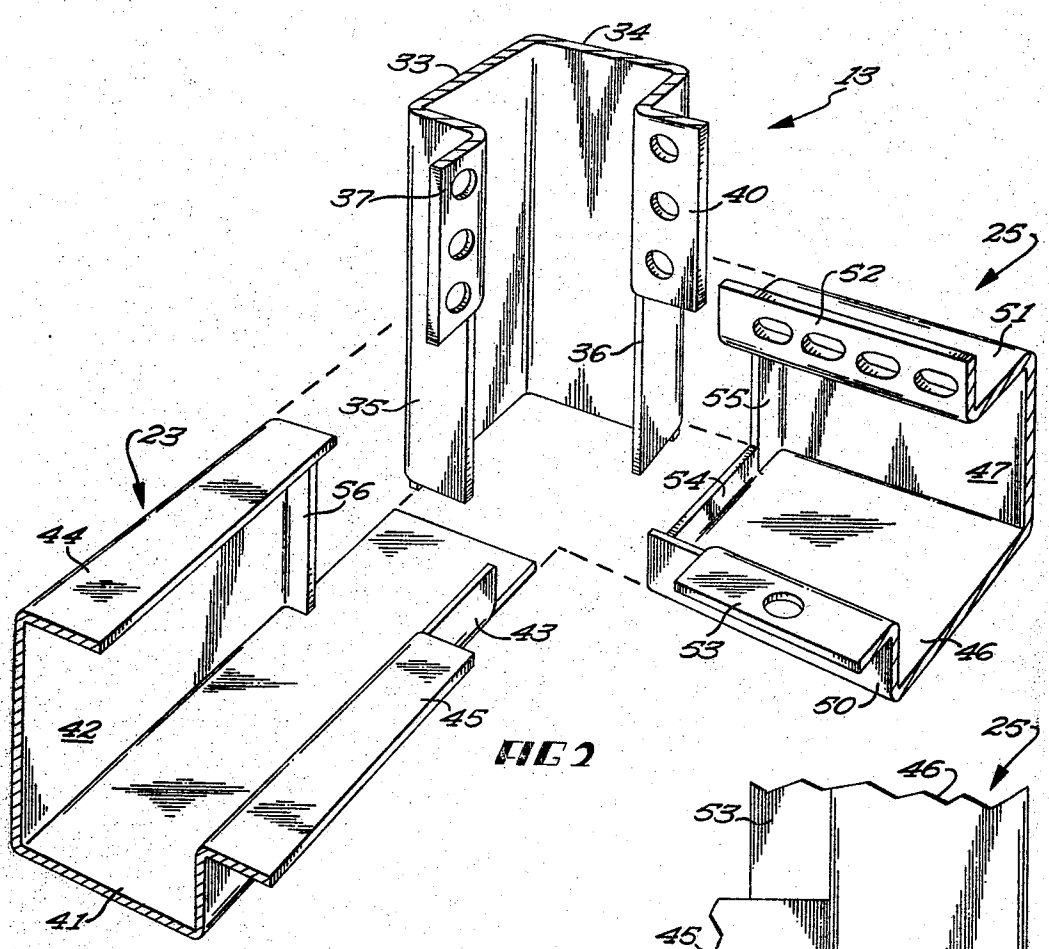

FIG 2

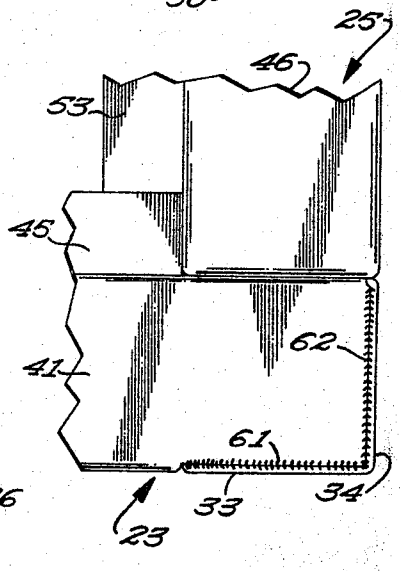

FIG 5

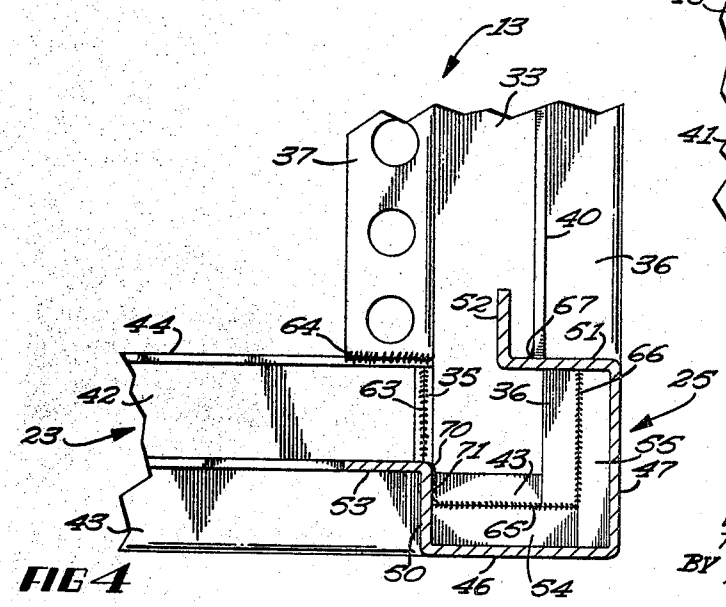

FIG 4

INVENTOR.
JAMES A. DURNBAUGH,
WILLIAM C. EVANS,
WILLIAM G. McLAUGHLIN,
TRUMAN L. NORDMAN
BY Alan M. Stanley
ATTORNEY

United States Patent Office

3,265,419

Patented August 9, 1966

1

3,265,419

CABINET STRUCTURE

James A. Durnbaugh and William C. Evans, Wabash, William G. McLaughlin, Gas City, and Truman L. Nordman, Roann, Ind., assignors to Honeywell Inc., a corporation of Delaware

Filed Dec. 30, 1963, Ser. No. 334,242
10 Claims. (Cl. 287—189.36

The present invention relates to cabinet structures and more particularly to the construction of cabinets of the type commonly used for housing electrical and electronic equipment, automatic controls, instrumentation and recording equipment, and various other equipment to provide convenient storage thereof and also to protect the equipment. Specifically, the invention resides in a unique welded frame construction which renders the cabinet extremely rigid, provides a pleasing external appearance of the structure, and results in a substantial reduction in the manufacturing operations required to produce the frame thereby substantially reducing the cost of manufacturing such cabinets.

As used herein, the terms "external weld" or "exterior weld" refer to welds which are visible from the exterior of a acbinet when it is completed. Conversely, the term "interior weld" refers to a weld which is on the interior of the cabinet and hence not visible from the outside when the cabinet is completed.

Relatively recent technological advances have resulted in a need for large numbers of cabinets or enclosures for housing control and instrumentation equipment. Enclosures of this type are presently available in many sizes and configurations, including vertical cabinets of various heights and cross-sectional dimensions, cabinets with a portion of the front sloped towards the rear to better facilitate instrumentation and other equipment, and also various special enclosures designed for particular problems and applications. Such enclosures are, in some applications, used singly, as with the relatively simple controls for a single process or machine, or may be grouped into large groups, sometimes to form a complete control room. Such enclosures may also be provided to the customer in a number of forms; for example, they may be completely assembled or they may be provided with a frame which may be fitted with a variety of panels, racks, drawers and other equipment, this being the well known "modular enclosure" which is presently extremely popular in industry.

Enclosures of the type described above are often filled with a large amount of equipment and are often adapted to be moved about in their use. In all cases it is essential that such enclosures be extremely rigid to adequately support and protect the equipment housed therein and also to render them applicable to the many conditions under which they are used. In addition, it is essential that such enclosures present a pleasing appearance which will enable them to fit into the many environments in which they are used. In spite of these two requirements it is also essential that such enclosures be manufactured at the lowest possible cost, while still maintaining quality, since the field has become extremely competitive.

Enclosures of the type described are generally constructed with a welded frame made up of a plurality of relatively rigid members welded together at the corners. At each corner of the frame, three members form a trihedral joint. In the past the corner construction has been accomplished in a number of ways. The simplest and most common way of joining these members is simply to abut adjoining members, to weld them, and then to grind away the excess weld to provide a smooth surface on all sides which will be on the exterior of the enclosure

2

when it is completed. Another method has been to provide flanges bent inwardly on two of the members and to simply weld these to the third member with the welds appearing on the interior of the structure. These methods result in relatively low strength joints which fail to provide the desired rigidity. In addition, the first of these methods results in a structure which requires a great deal of grinding to provide a smooth external surface which is acceptable when the enclosure is completed. Attempts to provide a corner construction with mutual abutment of the three intersecting members have resulted in a large number of exterior welds and hence have required a large amount of surface grinding to finish the frame satisfactorily.

In the present invention we have provided a unique corner construction for the frame members of such a cabinet which results in a pleasing appearance and an extremely rigid structure. The need for external welds has been substantially eliminated thereby greatly reducing the grinding required to finish the enclosures. Since grinding is a relatively costly manufacturing process, our construction results in a substantial reduction in the cost of production of the enclosures. This construction is accomplished by forming the ends of the intersecting members for mutual abutment, that is so that each one of the intersecting members abuts each of the other two intersecting members. A preferred construction provides at least four welds joining each one of the members to the other two of the members with the welds being along at least three non-parallel lines to add rigidity to the structure. At least two of these welds are common to each two of the three intersecting members to further add to the rigidity of the structure. These welds are provided on the interior of the structure so that they require no grinding. While it is not essential, the joint between these three members may be finished by a simple weld along two corner edges of the structure on the exterior thereof. This weld is the only one requiring any grinding in finishing the structure. This construction has been found to result in strength and rigidity which is superior to that found in previous constructions for cabinet frames and in an extremely pleasing external appearance, but with a minimum amount of grinding and, hence, a substantial cost reduction over enclosures made according to previous methods of manufacture.

In certain applications where the ultimate strength of the structure is not required certain of the welds may be omitted. In the form which the invention then takes there are provided at least five welds mutually joining the three intersecting members and, of these, at least three or alternatively all five, are internal welds. Each of the three members is joined to each of the other members by at least one of these internal welds. This construction also results in a structure of high strength and rigidity, a pleasing external appearance and requiring little or no external grinding.

Therefore an object of our invention is to provide an improved cabinet construction.

Another object of our invention is to provide a unique welded corner construction for the frames of equipment enclosures or cabinets which results in a structure having an extremely high degree of strength and rigidity.

A further object of our invention is to provide a corner construction for such frames which results in a pleasing external appearance with little or no surface grinding required.

A still further object of our invention is to provide a welded corner construction for the frames of equipment enclosures or cabinets wherein the three intersecting frame members at a corner thereof are in mutual abutment and

mutually joined by a series of internal welds so that the frame has superior strength and rigidity.

These and other objects of our invention will become apparent to those skilled in the art upon reading the following detailed description of a preferred embodiment of our invention in conjunction with the accompanying drawing wherein:

FIGURE 1 is an exploded perspective view of a modular equipment enclosure having a frame constructed according to the present invention.

FIGURE 2 is a fragmentary exploded perspective view of one corner of the enclosure frame before welding and disclosing the intersecting frame members formed according to a preferred embodiment of our invention.

FIGURE 3 is similar to FIGURE 2 except that it discloses the intersecting members in assembled form and after welding.

FIGURE 4 is a fragmentary view of the corner structure disclosed in FIGURE 3 as seen when viewed from the right hand end of FIGURE 3.

FIGURE 5 is a further fragmentary view of the corner structure disclosed in FIGURES 3 and 4 as seen from the bottom of FIGURE 4.

The modular-type enclosure, that is an enclosure with a frame assembly to which a number of accessory components may be attached according to the specific needs of the user of the enclosure, is presently used extensively and our invention will be described as applied to this type of enclosure. It is to be understood, however, that the present invention has application in cabinets of many types and that the following description of a specific embodiment of the invention is for illustrative purposes only.

Referring to FIGURE 1, numeral **10** generally designates a modular enclosure which includes a frame **11** having four vertical members or rails **12**, **13**, **14**, and **15**. The frame further includes, at the top, a front horizontal member **16**, a rear horizontal member **17**, and left and right horizontal side members **20** and **21**, respectively. At the bottom, frame **11** includes a front horizontal member **22**, a rear horizontal member **23**, and left and right horizontal side members **24** and **25**, respectively. These members are welded together to form the rectangular frame **11** which is adapted to be mounted on a base **26** which may be of any conventional construction. The preferred configuration of the frame members and the manner in which they are formed and welded according to the present invention will be discussed in detail in connection with FIGURES 2, 3, 4, and 5. Illustrative of the accessory equipment which may be used in connection with frame **11** are side panels **27** and **30**, a rear panel **31**, and a top cover or panel **32**. It is to be understood that these accessories are shown by way of example only and that any of many known accessory components may be used. For example the front of the cabinet may, and in most cases will, have mounted thereon a flat panel (not shown) and the cabinet may include shelves, drawers, writing surfaces, and other equipment storage or mounting facilities.

FIGURE 2 discloses in detail the cross-sectional configuration of the frame members and the manner in which they are formed according to the present invention for mutual abutment to facilitate mutual connection by welding. All eight corners of the frame are constructed identically. Thus FIGURE 2 discloses the construction of any one of these corners and, for simplicity, is taken as the corner formed by the intersection of frame members **13**, **23**, and **25** in FIGURE 1.

Referring to FIGURE 2, it will be seen that the frame members **13**, **23**, and **25** are all of substantially similar channel section. Member **13** includes two adjacent longitudinally extending walls **33** and **34** of a predetermined dimension, hereinafter referred to as full-width. Adjacent wall **33** and turned inwardly therefrom, member **13** has a wall **35** which is generally opposite full-width wall **34** and substantially narrower than wall **34**. Adjacent wall **34** and turned inwardly therefrom is another longitudinally extending wall **36** generally opposite from wall **33**. Walls **35** and **36** are of substantially the same width, hereinafter referred to as partial-width. While in the preferred embodiment shown in FIGURE 2, walls **33** and **34** are of substantially identical width as are walls **35** and **36**, it will be appreciated that this particular choice of width of the walls is not essential to the present invention. Adjacent wall **35** and turned outwardly therefrom is a perforated flange member **37** and, similarly, adjacent wall **36** and turned outwardly therefrom, is a perforated flange **40**.

Member **23** includes full-width walls **41** and **42** and adjacent and turned inwardly from these walls are partial-width walls **43** and **44**, respectively. Turned outwardly from wall **43** is flange **45** which may be of a width substantially equal to the width of flange **40** on member **13**.

Member **25** includes full-width walls **46** and **47** and adjacent and turned inwardly from them, partial-width walls **50** and **51**, respectively. In the preferred embodiment of our invention disclosed and described herein, the full-width walls of all of the members are substantially of equal width. However, as will be better seen in connection with FIGURES 3 and 4, partial-width wall **51** of member **25** is of a slightly greater width than are the other partial-width walls of the members. The purpose for this difference in width will be pointed out hereinafter.

Turned outwardly from partial-width leg **51** is a perforated flange **52** and, similarly, partial width leg **50** has an outturned perforated flange **53** adjacent thereto.

As pointed out previously, the three members **13**, **23**, and **25** are formed to facilitate mutual abutment. To facilitate this abutment, member **25** has, at its intersecting end, an inturned flange **54** on wall **46** and a similar inturned flange **55** at the end of wall **47**. Flange **53** of member **25** is shorter, on the abutting end thereof, than the walls of member **25** by an amount approximately equal to the width of flange **45** on member **23**.

Partial-width walls **35** and **36** of member **13** are shorter, at the intersecting end thereof, than full-width walls **33** and **34** by an amount approximately equal to the thickness of wall **41** of member **23**. Flanges **37** and **40** of member **13** are shorter than walls **33** and **34** by an amount approximately equal to the width of walls **42** of member **23** and **47** of member **25**, respectively.

Full-width wall **41** of member **23** may be considered a full-length wall. Wall **43** of member **23** is shorter than wall **41** by an amount approximately equal to the width of partial-width wall **36** of member **13**. Flange **45** of member **23** is shorter than wall **41** thereof by an amount approximately equal to the width of wall **46** of member **25**, and walls **42** and **44** of member **23** are shorter than the wall **41** thereof by an amount approximately equal to the width of wall **33** of member **13**. Formed at the intersecting end of wall **42** of member **23** is a relatively narrow inturned flange **56**.

FIGURES 3, 4, and 5 disclose the assembly when it has been assembled and welded. Referring thereto, it is seen that the extended end of wall **41** of member **23** is inserted underneath walls **35** and **36** of member **13** and abuts the lower inside ends of walls **33** and **34** thereof. These members are welded on the interior of the joint as by welds **57** and **60** (FIGURE 3). Welds **57** and **60** may be replaced or supplemented by welds **61** and **62** at the exterior of the structure (FIGURE 5). Welds **61** and **62** may be desirable in that they can thereafter be ground off to provide a smooth corner surface of the structure and hence a more pleasing appearance. In the description of the assembly and welding of the members which follows, it will be noted that the only welds on the exterior of the structure are the optional welds **61** and **62** and hence this is the only surface which must be ground after the welding is completed.

When the unit is assembled, the flange **56** on member

23 abuts wall 35 of member 13 and these members are joined by a weld 63 on the interior of the joint. Partial-width wall 44 of member 23 abuts the lower end of the outturned flange 37 of member 13 and these two members are preferably joined by a weld 64 which also is on the interior of the structure. Fange 54 of member 25 abuts wall 43 of member 23 and wall 36 of member 13 and these members are joined by a weld 65 also being on the interior of the structure. Flange 55, inturned from wall 47 of member 25, abuts wall 36 of member 13 and these members are joined by a weld 66. The lower end of flange 40 of member 13 abuts the exterior surface of wall 51 on member 25 and these members are preferably joined by weld 67. Flange 45 on member 23 abuts the edge of wall 50 of member 25 and is preferably joined thereto by a weld 70. In addition, the end of partial-width wall 50 of member 25 abuts the exterior of partial-width leg 43 of member 23 and these members are preferably joined by an internal weld 71 as best seen in FIGURE 4. The weld 71 actually runs between welds 65 and 70. While weld 71 may result in additional rigidity of the structure, it may be omitted if desired since members 23 and 25 are already joined in this area by welds 65 and 70. Thus it is to be understood that the weld 71 may be omitted without detracting from the applicants' invention.

From the foregoing description of the welded construction, it can be seen that each of the members 13, 23, and 25 is joined to the other two of the members by at least four internal welds. For example, member 13 is joined to member 23 by internal welds 63 and 64 and is joined to member 25 by welds 66 and 67 and by a portion of the weld 65. Member 23 is joined to member 13 by welds 63 and 64 and to member 25 by welds 65 and 70. Member 25 is joined to member 13 by welds 66 and 67 and a portion of the weld 65 and to member 23 by welds 65 and 70. Thus it is further seen that at least two of the welds are common to each two of the three members. Further, the welds joining any one of the three members to the other two members lie along at least three non-parallel lines which is extremely important in adding rigidity to the structure. If internal welds 57 and 60 are also included to join wall 33 and 34, respectively, of member 13 to wall 41 of member 23, there would in fact be four internal welds joining members 13 and 23. If weld 71 is used to join members 23 and 25 it will be seen that there would be a total of five welds joining member 25 to the other two members, namely welds 65, 66, 67, 70 and 71. The total number of welds joining member 23 to the other two members (disregarding the optional welds 57 and 60) would also total five. These include welds 63, 64, 65, 70, and 71. It has already been pointed out that there are at least five internal welds joining member 13 to the other two members. These are a portion of weld 65, and welds 63, 64, 66, and 67. Thus with the use of weld 71 it can be said that each of the three frame members 13, 23, and 25 is joined to the other members by at least five welds internal to the structure.

It will be noted that in the foregoing description of the welded construction certain welds have been described as being absolute while others are described as being "preferable." Where ultimate strength and rigidity are required in the structure all of the welds described previously are used. However in certain applications requiring a lesser degree of strength and rigidity, certain of these welds may be eliminated for the sake of economy without departing from the scope of the present invention. The welds 63, 65, and 66, and also either the internal welds 57 and 60 or external welds 61 and 62, joining the full width walls 33 and 34 of member 13 to the full width wall 41 of member 23, are utilized in this alternative construction, but those welds previously described as "preferable," namely welds 64, 67, and 70, as well as the optional weld 71, may be omitted.

With the foresaid welds eliminated, it will be seen that the three intersecting members at any corner of the cabinet structure are mutually joined by at least five welds, at least three of which are internal welds. Also at least one internal weld joins each of the three members to each of the other two of the members. For example, the internal welds 63, 65, and 66 and either welds 57 and 60 or external welds 61 and 62 are always present. Of these, internal weld 63 joins the full-width wall 42 of member 23 to the partial-width wall 35 of member 13. Weld 65 joins the full-width wall 46 of member 25 to partial-width wall 43 of member 23 and weld 66 joins full-width wall 47 of member 25 to the partial-width wall 36 of member 13. Either welds 57 and 60 or welds 61 and 62 join walls 33 and 34 respectively of member 13 to the full-width wall 41 of member 23. Weld 65 also joins a portion of partial-width wall 36 of member 13 to full-width wall 46 of member 25.

This alternate construction also results in a structure which is relatively rigid and which requires no finishing grinding if the welds 57 and 60 are used on the interior of the joint, or a minimum of welding if the welds 61 and 62 are used on the exterior of the joint.

As pointed out previously, each of the corners of the enclosure frame is constructed in the manner described above. Accessory panels such as panels 27, 30, and 31 shown in FIGURE 1 are attached to the perforated flanges 37 and 40 of member 13 and to corresponding flanges on members 12, 14, and 15. A bottom panel (not shown) for the enclosure may be attached to perforated flange 53 of member 25 and to a similar flange on member 24. Similarly top panel 32 is attached to like flanges on frame members 20 and 21. Perforated flange 52, because of the width of wall 51 of member 25, is located farther on the interior of the enclosure than is the perforated flange 40 of member 13. A similar flange on horizontal side frame member 21 cooperates with flange 52 to provide a means for mounting vertical mounting members (not shown) extending from the top to the bottom of the enclosure. A similar pair of flanges is found on horizontal side frame members 20 and 24. The vertical mounting members which are attached to these flanges provide supports to which various equipment, such as shelves, drawer slides, and the chassis of electronic equipment, may be attached.

Our invention has been described in connection with a cabinet wherein the three intersecting members at each corner thereof are mutually perpendicular. Obviously, the invention will also find application in cabinets having corners formed at angles other than 90 degrees, for example, in wedge shaped and sloped front cabinets.

From the foregoing description of the welded frame construction, it can be seen that a structure is provided wherein the intersecting frame members forming a trihedral joint at a corner of the enclosure frame are formed for mutual abutment and welded to form what might be termed an interlocking structure. The structure is welded in a manner which provides maximum rigidity and strength and, since all of the welds except the two optional welds 61 and 62 are on the interior of the structure, the need for grinding in finishing the cabinet is eliminated or, if the optional welds are used, is substantially reduced. The use of this new construction also results in an extremely pleasing appearance as can be seen best in the fragmentary view of FIGURE 5. By eliminating or so substantially reducing the number of external welds, and thereby the grinding required to finish the enclosure, the cost of production of these enclosure frames has been very substantially reduced.

While we have shown and described a preferred embodiment of our invention, it is to be understood that this is for illustrative purposes only and that, obviously, various modifications may be made without departing from the invention. It is therefore to be understood that our invention is intended to be limited only by the scope of the appended claims.

We claim as our invention:

1. In a cabinet structure: a welded frame constructed of a plurality of channel members; three of said members intersecting and forming a trihedral joint at a corner of said frame; each of said channel members having four longitudinally extending walls disposed in angular relationship and including two adjacent full-width walls and two partial-width walls, each of said partial-width walls being adjacent one of said full-width walls and turned inwardly therefrom, each of said walls having a thickness which is relatively small with respect to the width thereof; a first and a second of said three intersecting members having a longitudinally extending flange portion adjacent at least one of said partial-width walls and turned outwardly therefrom; the third of said three intersecting members having a longitudinally extending flange portion adjacent each of its partial-width walls and turned outwardly therefrom; said first member having an inturned flange at the end of each of its full width walls and in a plane generally transverse thereto; the length of the outturned flange of said first member being shorter than the walls of said first member by an amount approximately equal to the width of the outturned flange of said second member; one full-width wall, one partial-width wall, and the outturned flange of said second member being shorter than the other full-width wall of said second member by an amount substantially equal to the width of a full-width wall of said third member, the other partial-width wall of said second member being shorter than the longer of said full-width walls thereof by an amount approximately equal to the width of a partial-width wall of said third member; an inturned flange at the end of the shorter of said full-width walls of said second member and in a plane generally transverse to said shorter wall; the partial-width walls of said third member being shorter than the full-width walls thereof by an amount substantially equal to the thickness of the longer of the full-width walls of said second member; a plurality of welds on the interior of said joint for joining said intersecting members and being so located that each two of said three intersecting members are joined by at least two of said internal welds, said welds being along at least three non-parallel lines to add rigidity to the joint, said internal welds including a weld joining one of said inturned flanges of said first member to the exterior of one of said partial-width walls of said third member, a weld joining the other of said inturned flanges of said first member to the exterior of the longer of said partial-width walls of said second member, a weld joining the inturned flange of said second member to the exterior of the other of said partial-width walls of said third member, a weld joining one of said outturned flanges of said third member to one of said partial-width walls of said first member, a weld joining the outturned flange of said second member to the other partial-width wall of said first member, and a weld joining the other of said outturned flanges of said third member to the shorter of said partial-width walls of said second member; and an external weld joining each of the full-width walls of said third member to the longer of the full-width walls of said second member.

2. In a cabinet structure: a welded frame constructed of a plurality of channel members; three of said channel members intersecting and forming a trihedral joint at a corner of said frame; each of said members being an integral element and having a plurality of angularly disposed, longitudinally extending walls including two adjacent full-width walls and two partial-width walls, each of said partial-width walls being adjacent one of said full-width walls and turned inwardly therefrom; a first and a second of said three intersecting members having a longitudinally extending flange portion adjacent at least one of said partial-width walls and turned outwardly therefrom; the third of said three intersecting members having a longitudinally extending flange portion adjacent each of its partial-width walls and turned outwardly therefrom; said first member having an inturned flange at the end of each of its full-width walls and in a plane generally transverse thereto; said second member having one full-width wall shorter than the other by an amount substantially equal to the width of a full-width wall of said third member, an inturned flange at the end of said shorter wall of said second member and in a plane generally transverse thereto; a plurality of welds on the interior of said joint for mutually joining said intersecting members, said welds including at least four welds collectively joining each one of said members to the other two of said members, each of said four welds lying along at least three non-parallel lines to add rigidity to said joint, said internal welds being so located that each two of said three members are joined by at least two internal welds, said plurality of welds including a weld joining each of said inturned flanges at the ends of the first and second members to the exterior of a partial-width wall of another of said members, a pair of welds joining one of the outturned flanges of said third member to a partial-width wall of said first member and the other outturned flange thereof to a partial-width wall of said second member, and a weld joining the outturned flange of said second member to a partial-width wall of said third member; and an external weld joining each of the full-width walls of said third member to the longer of the full-width walls of said second member.

3. In a cabinet structure: a welded frame constructed of a plurality of channel members; three of said members intersecting and forming a trihedral joint at a corner of said frame; each of said channel members having four longitudinally extending walls disposed in angular relationship and including two adjacent full-width walls and two partial-width walls, each of said partial-width walls being adjacent one of said full-width walls and turned inwardly therefrom, each of said walls having a thickness which is relatively small with respect to the width thereof; a first and a second of said three intersecting members having a longitudinally extending flange portion adjacent at least one of said partial-width walls and turned outwardly therefrom; the third of said three intersecting members having a longitudinally extending flange portion adjacent each of its partial-width walls and turned outwardly therefrom; said first member having an inturned flange at the end of each of its full-width walls and in a plane generally transverse thereto; the length of the outturned flange of said first member being shorter than the walls of said first member by an amount approximately equal to the width of the outturned flange of said second member; one full-width wall, one partial-width wall, and the outturned flange of said second member being shorter than the other full-width wall of said second member by an amount substantially equal to the width of a full-width wall of said third member, the other partial-width wall of said second member being shorter than the longer of said full-width walls thereof by an amount approximately equal to the width of a partial-width wall of said third member; an upturned flange at the end of the shorter of said full-width walls of said second member and in a plane generally transverse to said shorter wall; the partial-width walls of said third member being shorter than the full-width walls thereof by an amount substantially equal to the thickness of the longer of the full-width walls of said second member; at least three welds on the interior of said joint for mutually joining said intersecting members and being so located that each two of said three intersecting members are joined by at least one of said internal welds, said internal welds including a weld joining one of said inturned flanges of said first member to the exterior of one of said partial-width walls of said third member, a weld joining the other of said inturned flanges of said first member to the exterior of the longer of said partial-width walls of said second member and to a portion of said one of the partial-width walls of said third member, a weld joining the inturned flange of said second

member to the exterior of the other of said partial-width walls of said third member; and an external weld joining each of the full-width walls of said third member to the longer of the full-width walls of said second member.

4. In a cabinet structure: a welded frame constructed of a plurality of channel members; three of said channel members intersecting and forming a trihedral joint at a corner of said frame; each of said members being an integral element and having a plurality of angularly disposed, longitudinally extending walls including two adjacent full-width walls and two partial-width walls, each of said partial-width walls being adjacent one of said full-width walls and turned inwardly therefrom; a first and a second of said three intersecting members having a longitudinally extending flange portion adjacent at least one of said partial-width walls and turned outwardly therefrom; the third of said three intersecting members having a longitudinally extending flange portion adjacent each of its partial-width walls and turned outwardly therefrom; said first member having an inturned flange at the end of each of its full-width walls and in a plane generally transverse thereto; said second member having one full-width wall shorter than the other by an amount substantially equal to the width of a full-width wall of said third member, an inturned flange at the end of said shorter wall of said second member and in a plane generally transverse thereto; and a plurality of welds on the interior of said joint for mutually joining said intersecting members, said welds including at least three welds collectively joining each one of said members to the other two of said members, said internal welds being so located that each two of said three members are joined by at least one internal weld, said plurality of welds further including a weld joining each of said inturned flanges at the ends of the first and second members to the exterior of a partial-width wall of another of said members; and an external weld joining each of the full-width walls of said third member to the longer of the full-width walls of said second member.

5. In a cabinet structure: a welded frame constructed of a plurality of channel members; three of said channel member intersecting and forming a trihedral joint at a corner of said frame; each of said said members being an integral element and having a plurality of angularly disposed, longitudinally extending walls including two adjacent full-width walls and two partial-width walls, each of said partial-width walls being adjacent one of said full-width walls and turned inwardly therefrom; a first and a second of said three intersecting members having a longitudinally extending flange portion adjacent at least one of said partial-width walls and turned outwardly therefrom; the third of said three intersecting members having a longitudinally extending flange portion adjacent each of its partial-width walls and turned outwardly therefrom; said first member having an inturned flange at the end of each of its full-width walls and in a plane generally transverse thereto; said second member having one full-width wall shorter than the other by an amount substantially equal to the width of a full-width wall of said third member, an inturned flange at the end of said shorter wall of said second member and in a plane generally transverse thereto; a plurality of welds on the interior of said joint for mutually joining said intersecting members, said welds including at least three welds collectively joining each one of said members to the other two of said members, said internal welds being so located that each two of said three members are joined by at least one internal weld, said plurality of welds further including a weld joining each of said inturned flanges at the ends of the first and second members to the exterior of a partial-width wall of another of said members.

6. In a cabinet structure having a frame constructed of a plurality of elongated channel members three of which intersect at a corner of the frame, the improved construction comprising: each of said channel members having a plurality of angularly disposed, longitudinally extending walls including two adjacent full-width walls and two partial-width walls, each of said partial-width walls being adjacent one of said full-width walls and turned inwardly therefrom; the intersecting ends of said members being formed for mutual abutment to facilitate joining to form a trihedral joint wherein a first full-width wall and a first partial-width wall of a first of said members abut a first partial-width wall of the second of said members, said first full-width wall, a second full-width wall, and a second partial-width wall of said first member abut a first partial-width wall of the third of said members, a second partial-width wall and a first full-width wall of said second member abut a second partial-width wall of said third member, and a second full-width wall of said second member abuts both of the full-width walls of said third member; and means joining each of the aforesaid abutting walls.

7. In a cabinet structure: a frame constructed of a plurality of channel members; three of said members intersecting and forming a trihedral joint at a corner of said frame; each of said channel members having four longitudinally extending walls disposed in angular relationship and including two adjacent full-width walls and two partial-width walls, each of said partial-width walls being adjacent one of said full-width walls and turned inwardly therefrom, each of said walls having a thickness which is relatively small with respect to the width thereof, the walls of the first of said members all being of substantially the same length; one full-width wall and one partial-width wall of the second of said members being shorter than the other full-width wall of said second member by an amount substantially equal to the width of a full-width wall of the third of said members, the other partial-width wall of said second member being shorter than the longer of said full-width walls thereof by an amount approximately equal to the width of a partial-width wall of said third member; the partial-width walls of said third member being shorter than the full-width walls thereof by an amount substantially equal to the thickness of the longer of the full-width walls of said second member; and joining means rigidly connecting each of said intersecting members to each of the other of said members, said connections being along at least three non-parallel lines to add rigidity to the joint and including means joining one of said full-width walls of said first member to the exterior of one of said partial-width walls of said third member, means joining the other of said full-width of said first member to the exterior of the longer of said partial-width walls of said second member, means joining the shorter of said full-width walls of said second member to the exterior of the other of said partial-width walls of said third member, and means joining each of the full-width walls of said third member to the longer of the full-width walls of said second member.

8. In a cabinet structure: a frame constructed of a plurality of channel members; three of said members intersecting and forming a trihedral joint at a corner of said frame; each of said channel members having four longitudinally extending walls disposed in angular relationship and including two adjacent full-width walls and two partial-width walls, each of said partial-width walls being adjacent one of said full-width walls and turned inwardly thereform, each of said walls having a thickness which is relatively small with respect to the width thereof; the walls of the first of said members all being of substantially the same length; one full-width wall and one partial-width wall of the second of said members being shorter than the other full-width wall of said second member by an amount substantially equal to the width of a full-width wall of the third of said members, the other partial-width wall of said second member being shorter than the longer of said full-width walls thereof by an amount approximately equal to the width of a partial-width wall of said third member; the partial-width walls

of said third member being shorter than the full-width walls thereof by an amount substantially equal to the thickness of the longer of the full-width walls of said second member; and a plurality of welds for joining each of said intersecting members to each of the other of said members, said welds being along at least three non-parallel lines to add rigidity to the joint and including a weld joining one of said full-width walls of said first member to the exterior of one of said partial-width walls of said third member, a weld joining the other of said full-width of said first member to the exterior of the longer of said partial-width walls of said second member, a weld joining the shorter of said full-width walls of said second member to the exterior of the other of said partial-width walls of said third member, and a weld joining each of the full-width walls of said third member to the longer of the full-width walls of said second member.

9. In a cabinet structure: a frame constructed of a plurality of channel members; three of said members intersecting and forming a trihedral joint at a corner of said frame; each of said channel members having four longitudinally extending walls disposed in angular relationship and including two adjacent full-width walls and two partial-width walls, each of said partial-width walls being adjacent one of said full-width walls and turned inwardly therefrom, each of said walls having a thickness which is relatively small with respect to the width thereof; a first and a second of said three intersecting members having a longitudinally extending flange portion adjacent at least one of said partial-width walls and turned outwardly therefrom; the third of said three intersecting members having a longitudinally extending flange portion adjacent each of its partial-width walls and turned outwardly therefrom; the length of the outturned flange of said first member being shorter than the walls of said first member by an amount approximately equal to the width of the outturned flange of said second member; one full-width wall, one partial-width wall, and the outturned flange of said second member being shorter than the other full-width wall of said second member by an amount substantially equal to the width of a full-width wall of said third member, the other partial-width wall of said second member being shorter than the longer of said full-width walls thereof by an amount approximately equal to the width of a partial-width wall of said third member; the partial-width walls of said third member being shorter than the full-width walls thereof by an amount substantially equal to the thickness of the longer of the full-width walls of said second member; and a plurality of rigid connections for joining said intersecting members and being so located that each two of said three intersecting members are joined by at least two of said connections, said connections being along at least three non-parallel lines to add rigidity to the joint, said connection including means joining one of said full-width walls of said first member to the exterior of one of said partial-width walls of said third member, means joining the other of said full-width walls of said first member to the exterior of the longer of said partial-width walls of said second member, means joining the shorter of said full-width walls of said second member to the exterior of the other of said partial-width walls of said third member, means joining one of said outturned flanges of said third member to one of said partial-width walls of said first member, means joining the outturned flange of said second member to the other partial-width wall of said first member, means joining the other of said outturned flanges of said third member to the shorter of said partial-width walls of said second member, and means joining each of the full-width walls of said third member to the longer of the full-width walls of said second member.

10. In a cabinet structure: a frame constructed of a plurality of channel members; three of said members intersecting and forming a trihedral joint at a corner of said frame; each of said channel members having four longitudinally extending walls disposed in angular relationship and including two adjacent full-width walls and two partial-width walls, each of said partial-width walls being adjacent one of said full-width walls and turned inwardly therefrom, each of said walls having a thickness which is relatively small with respect to the width thereof; a first and a second of said three intersecting members having a longitudinally extending flange portion adjacent at least one of said partial-width walls and turned outwardly therefrom; the third of said three intersecting members having a longitudinally extending flange portion adjacent each of its partial-width walls and turned outwardly therefrom; the length of the outturned flange of said first member being shorter than the walls of said first member by an amount approximately equal to the width of the outturned flange of said second member; one full-width wall, one partial-width wall, and the outturned flange of said second member being shorter than the other full-width wall of said second member by an amount substantially equal to the width of a full-width wall of said third member, the other partial-width wall of said second member being shorter than the longer of said full-width walls thereof by an amount approximately equal to the width of a partial-width wall of said third member; the partial-width walls of said third member being shorter than the full-width walls thereof by an amount substantially equal to the thickness of the longer of the full-width walls of said second member; and a plurality of welds for joining said intersecting members and being so located that each two of said three intersecting members are joined by at least two of said welds, said welds being along at least three non-parallel lines to add rigidity to the joint, said welds including a weld joining one of said full-width walls of said first member to the exterior of one of said partial-width walls of said third member, a weld joining the other of said full-width walls of said first member to the exterior of the longer of said partial-width walls of said second member, a weld joining the shorter of said full-width walls of said second member to the exterior of the other of said partial-width walls of said third member, a weld joining one of said outturned flanges of said third member to one of said partial-width walls of said first member, a weld joining the outturned flange of said second member to the other partial-width wall of said first member, a weld joining the other of said outturned flanges of said third member to the shorter of said partial-width walls of said second member, and a weld joining each of the full-width walls of said third member to the longer of the full-width walls of said second member.

References Cited by the Examiner

UNITED STATES PATENTS

1,462,617	6/1923	Ohnstrand	189—36
2,167,525	7/1939	Rosendale	189—36
3,075,818	1/1963	Fay	312—257
3,085,664	4/1963	Adams et al.	52—280

HARRISON R. MOSELEY, *Primary Examiner.*

L. J. SANTISI, J. K. BELL, *Assistant Examiners.*