Nov. 14, 1950 S. T. CONWISER 2,529,724

CARRYING KIT REMOVABLY INSERTABLE INTO A PURSE OR THE LIKE

Filed March 21, 1947

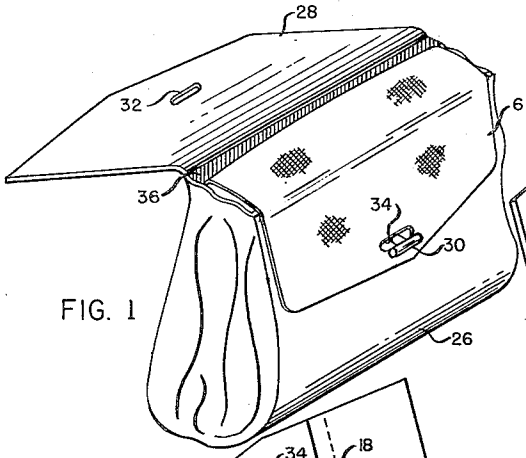

FIG. 1

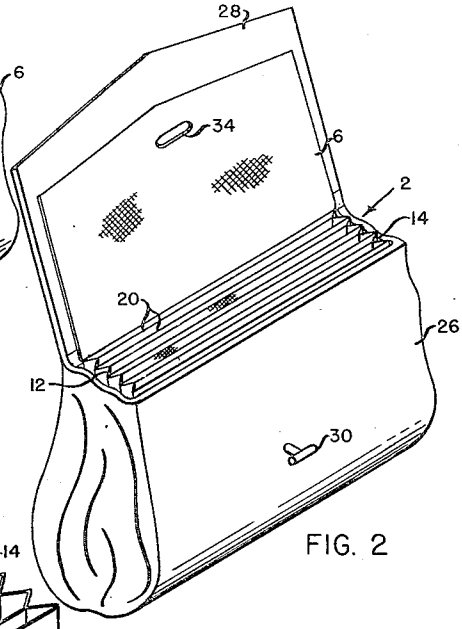

FIG. 2

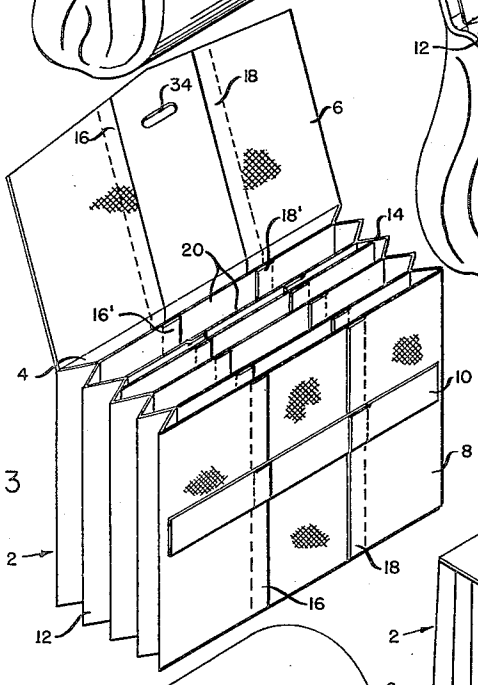

FIG. 3

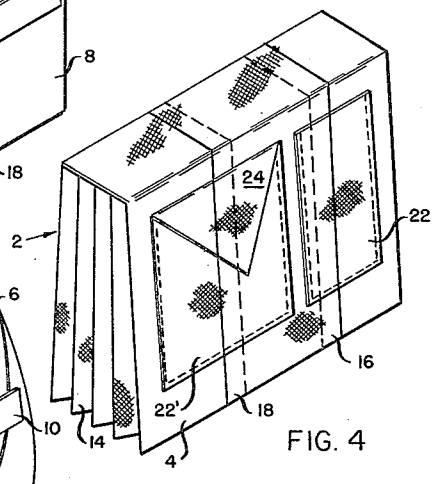

FIG. 4

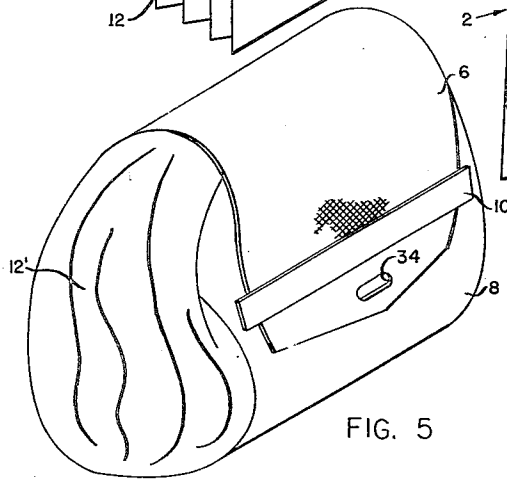

FIG. 5

INVENTOR
SYLVIA T. CONWISER
BY
James & Franklin
ATTORNEY

Patented Nov. 14, 1950 2,529,724

UNITED STATES PATENT OFFICE

2,529,724

CARRYING KIT REMOVABLY INSERTABLE INTO A PURSE OR THE LIKE

Sylvia T. Conwiser, New York, N. Y.

Application March 21, 1947, Serial No. 736,229

2 Claims. (Cl. 150—34)

1

This invention relates to a carrying kit particularly adapted to be removably inserted within a conventional lady's purse.

Fashion dictates that a purse, as well as other accessories, match the style of dress which a woman wears. It is therefore often required that a woman carry a different handbag each day to match her change of clothing and indeed it is not uncommon for such changes of clothing and handbag to take place several times a day. Since handbags, and particularly the more capacious handbags, contain a large variety of loose articles such as lipsticks, compacts, cigarette cases, cigarette lighters, eye make-up, handkerchiefs, coin purses, wallets and the like, it is a troublesome task to remove all of these objects from one purse and place them in another purse even as frequently as once a day.

The needs of the individual are such that access to all of the varied articles contained within a handbag is rarely simultaneously desired. When keys are needed, a lipstick is not needed; when cigarettes are needed, a compact is not needed; when a handkerchief is desired, access to small change is not desired. Yet when all of these articles are contained in a single purse, when any one of those objects is desired, the entire purse must be opened and all of the contents thereof exposed for access and therefore exposed to possible loss. Compartmentation of the purses has to some extent alleviated this situation but only insofar as ease of picking out the particular desired item is concerned. All of the items are still exposed to possible loss.

It is the prime object of the present invention to devise a carrying kit which in and of itself serves as a convenient container for the many items which ladies must carry with them yet which is specifically designed to be removably insertable into a purse, so that when it is necessary to transfer one's belongings from one purse to another all that is required is to remove the carrying kit from the discarded purse and place it into the newly chosen one.

A further object of the present invention is to so construct such a carrying kit as to make it conformable to the interior of a number of different purses of varying sizes and shapes.

A more particular object of the present invention is to provide this carrying kit with a closing flap independent of the closing flap of the purse

2

with which it is used and in addition to place compartments on the exterior of the rear wall of the kit so that those compartments may be made accessible without opening the rest of the kit and so that when the rest of the kit is opened, those compartments are inaccessible. It is contemplated that these compartments will be utilized to hold money and keys, for example, so that when a lipstick is wanted, the risk of loss of the money is minimized and so that when money or keys are wanted, they may be conveniently obtained without risk of loss of the remainder of the contents of the kit.

To the accomplishment of the foregoing objects and such other objects as may hereinafter appear, the present invention relates to the construction of a carrying kit adapted to be used in conjunction with and to be removably insertable within a purse or the like as defined in the appended claims and as set forth in this specification, taken together with the accompanying drawings, in which:

Fig. 1 is a perspective view of a conventional handbag containing the carrying kit of the present invention, the closing flap of the handbag being opened and the closing flap of the kit being closed;

Fig. 2 is a similar view showing both closing flaps in open position;

Fig. 3 is a perspective view of one embodiment of the carrying kit removed from the purse showing details of its construction which render it conformable to the interior of a number of different sized purses;

Fig. 4 is a rear perspective view of the kit of Fig. 3; and

Fig. 5 is a perspective view of another embodiment of the carrying kit.

The kit of the present invention comprises a body generally designated 2 including a rear wall 4 to which closing flap 6 is attached. The front wall 8 of the kit is provided with a fastening means, here shown in the form of strip 10, adapted to detachably secure the closing flap 6 in closed position as shown in Fig. 5. In the embodiment illustrated in Figs. 1 through 4, the kit is shown as composed of a semi-rigid material formed into a box or portfolio shape. In Fig. 5 the kit is shown as composed of an extremely soft and pliable material formed into pouch shape. It will be understood that the

shape, size and material of which these kits may be made may vary over many wide limits, it being desirable to vary the size, shape and material in order to provide kits which will conform to the various sizes and shapes of ladies' purses in use.

Since the value of these kits would be largely lost were each able to be used only with a single purse, the kits have been so constructed as to permit each to be conformable, within limits, to a variety of sizes and shapes of purses. Thus, in the embodiment illustrated in Figs. 1 through 4, the side walls 12 and 14 of the kit are provided with accordion-like pleats to permit the kit to be expandable in depth so as to conform to the interior of purses of various depths.

In order to increase the flexibility of use of the kit, the front and rear walls 6 and 4 and the closing flap 6 thereof may also be provided with the pleats 16 and 18 so as to permit the kit to be expandable lengthwise as well as in depth. These pleats 16 and 18 are shown in Figs. 3 and 4.

Compartmentation in the kits of Figs. 2 and 4 is provided by partitions 20 and, when the kit is expandable lengthwise as well as in depth, these partitions, too, are provided with pleats 16' and 18' corresponding to the pleats 16 and 18.

The pouch kit illustrated in Fig. 5 has an excess of material provided in its limp side walls 12', this material naturally falling into pleated form and therefore permitting the pouch to expand in depth and thus to conform to various sized bags.

In a preferred embodiment, the exterior surface of the rear wall 4 of the kit is provided with one or more compartments 22 and 22' (see Fig. 4), one of which, for example the compartment 22, may be used to contain keys and the other of which, the compartment 22', may be used to contain money. The latter compartment may be provided with a closing flap 24 in order to assist in the retention of the money therein.

The kit is adapted to be removably inserted into a purse such as the one illustrated in Figs. 1 and 2 and represented by the reference numeral 26. Such purses are customarily provided with a closing flap 28 and with a fastening means 30 on the body of the purse adapted to be releasably engaged with cooperating fastening means 32 on the closing flap 28 of the purse so as to releasably retain said closing flap in closed position. The closing flap 6 of the kit is therefore preferably provided with a cooperating fastening means 34 similar to the fastening means 32 on the closing flap 28 of the purse 26 so that the same purse fastening means 30 may be employed to retain both the closing flap 6 and the closing flap 28 in closed position or to permit either individual opening of the closing flap 28 (see Fig. 1) or simultaneous opening of the two closing flaps 6 and 28 (see Fig. 2). It will be understood that the fastening means here disclosed is but typical of the many constructions which could be used and are customarily incorporated into purses.

This interaction between the closing flaps 6 and 28, their fastening means 34 and 32, and the fastening means 30 on the purse 26 gives rise to a particular advantage when the kit 2 is provided with the exterior compartments 22 and 22' as is illustrated in Fig. 4. If only the purse closing flap 28 be opened (see Fig. 1), a gap 36 is exposed between the rear wall of the purse and the rear wall 4 of the kit 2, thus rendering accessible the compartments 22 and 22' on the rear wall 4 of the kit. If, on the other hand, both closing flaps 6 and 28 are opened (see Fig. 2), the interior of the kit is opened, thus rendering accessible the contents thereof, but access to the compartments 22 and 22' is simultaneously closed, thus effectively preventing any of the articles which may be contained in said compartments 22 and 22' from falling out of the purse and becoming lost.

The manner of use of the kit in combination with the purse will in the main be apparent from the foregoing description. The kit, being a bodily removable unit, may in one motion be removed from one purse and inserted into another, carrying with it all of the personal articles transfer of which is desired. The pleated construction of the walls of the kit render it conformable, within limits, to various sized purses so that a single kit can be used with a number of purses of different sizes and shapes. If the compartments 22 and 22' be employed to hold, for example, keys and money respectively, when keys and/or money are desired, only the purse closing flap 28 need be opened. The contents of the interior of the kit will be retained therein by the kit closing flap 6 and consequently it is impossible to spill or lose any of them. If some other article, such as a lipstick, is desired, both closing flaps 6 and 28 may be opened, thus permitting the user of the purse and kit to obtain the desired article and at the same time, since the kit closing flap 6 closes the top of the gap 36, prevent the keys or the money contained in the compartments 22 and 22' from becoming visible or from falling from the purse.

It will be apparent that many variations as to size, shape, material and ornamentation may be incorporated into the carrying kit of my invention without departing from the spirit of the invention as defined in the following claims.

I claim:

1. In combination, a purse and a carrying kit removably insertable therein, both said purse and said kit having bodies and closing flaps, said kit having a rear wall to which its closing flap is secured and also having a compartment on the exterior surface of said rear wall, said compartment being rendered accessible by opening movement of said purse flap alone and the interior of said kit being rendered accessible and said compartment being rendered inaccessible by opening movement of said purse and kit flaps together.

2. A carrying kit adapted to be removably inserted into a purse having a closing flap, said kit comprising a body having side and end walls, a closing flap secured to one of said side walls and manipulatable independently of said purse flap, and a compartment on the exterior surface of the side wall to which said closing flap is secured, said compartment being rendered accessible by opening movement of said purse flap alone, and rendered inaccessible by opening movement of said purse and kit flaps together, all of said side and end walls and said kit closing flap including expandable folds, said kit thus being expandable in more than one direction so as to be conformable to the interior of a number of different sized purses.

SYLVIA T. CONWISER.

(References on following page)

REFERENCES CITED

The following references are of record in the file of this patent:

UNITED STATES PATENTS

Number	Name	Date
1,978,971	Thornhill et al.	Oct. 30, 1934
1,995,664	Boyes	Mar. 26, 1935
2,009,077	Walitzky	July 23, 1935
2,011,709	Craighead	Aug. 20, 1935
2,029,905	Banner	Feb. 4, 1936
2,086,326	Goldberg	July 6, 1937
2,104,439	Schein	Jan. 4, 1938
2,131,382	Lobel	Sept. 27, 1938
2,183,428	McNary	Dec. 12, 1939
2,210,755	Frank	Aug. 6, 1940
2,447,940	Holland	Aug. 24, 1948
2,464,312	Holder	Mar. 15, 1949
2,477,388	Moore	July 26, 1949

FOREIGN PATENTS

Number	Country	Date
296,261	Great Britain	Aug. 30, 1928