(12) UK Patent Application (19) GB (11) 2 060 416 A

(21) Application No **8033437**
(22) Date of filing **16 Oct 1980**
(30) Priority data
(31) **54/143710U**
(32) **17 Oct 1979**
(33) **Japan (JP)**
(43) Application published **7 May 1981**
(51) **INT CL³ A63H 3/31**
(52) Domestic classification **A6S** 1F5
(56) Documents cited
GB 1541890
GB 1425306
GB 1094560
GB 871728
GB 754253
US 4212132A
(58) Field of search **A6S**
(71) Applicants
Shiba Co., Ltd., 201-banchi, Motoisshiki-cho, Edogawa-ku, Tokyo, Japan
(72) Inventor
Hiroo Makishima
(74) Agents
Forrester, Ketley & Co., Forrester House, 52 Bounds Green Road, London N11 2EY

(54) **Sound generating doll**

(57) A sound generating doll comprises a doll body having therein a variable volume air chamber and, in pneumatic connection with the interior of the chamber, a pneumatic sound generating means, whereby, on alteration of the volume of the air chamber, air is caused to pass through the sound generating means, thereby generating a sound.

Preferably the doll produces a sneezing sound and has a bellows air chamber 7 which supports a whistle 6 and which is clamped between a front receiving rod 2 extending from a body part and a rear receiving rod 3 standing upright on a head part mounting base 5. A connecting rod 4 is disposed below the head part mounting base and is pivotably secured to an upper support rod. An operating rod 14 is pivotably secured to a lower support rod and has a pawl 17 rotatably secured to the upper end thereof. A press rod 23 is connected to the lower end of the operating rod.

FIG.1

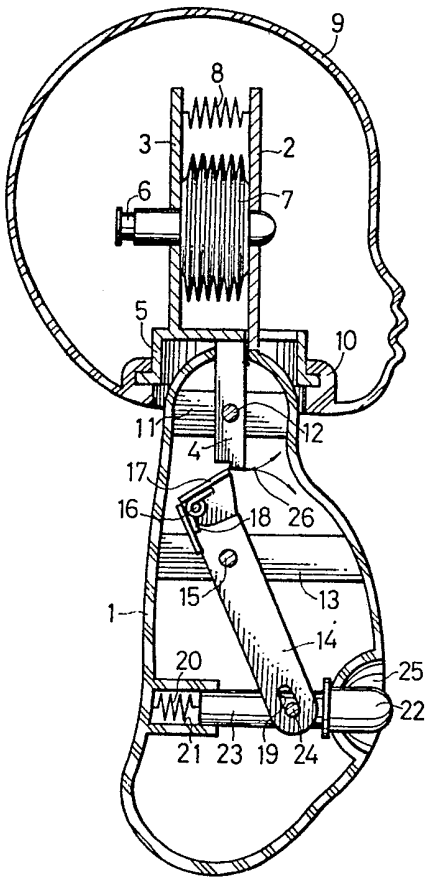

GB 2 060 416 A

2060416

FIG.1

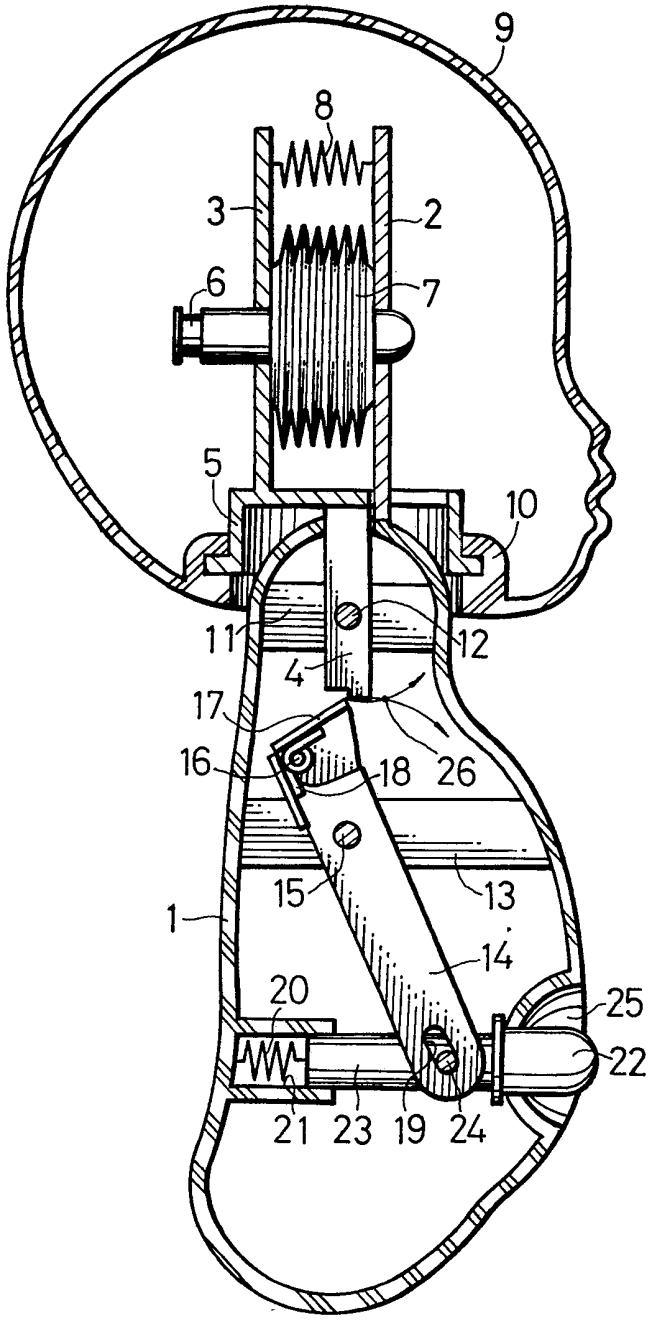

FIG.2

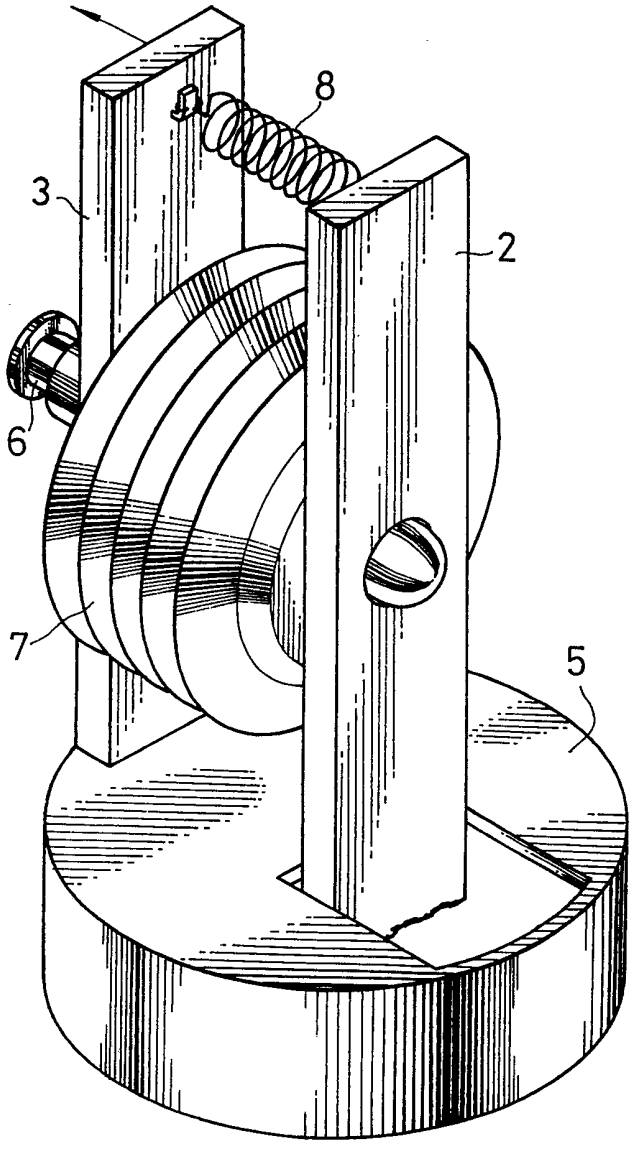

SPECIFICATION

Sound generating doll

The present invention relates to a sound generating doll. More particularly, but not exclusively, the present invention relates to a doll which generates a sound resembling a sneezing sound by instantaneously exhausting air inside a bellows air chamber through a whistle mounted thereon.

There have been conventionally known dolls which generate various vocal sounds or which generate weeping sounds with a whistle using power sources such as electric cells and power springs. However, these kinds of dolls have problems in that they require power sources, or they only generate sounds and provide no change in expression, so that operating them becomes boring.

It is, therefore, the primary object of the present invention to provide a novel doll which eliminates or at least mitigates the defects of the prior art dolls.

According to the present invention there is provided a sound generating doll, which comprises a doll body having therein a variable volume air chamber and, in pneumatic connection with the interior of the chamber, a pneumatic sound generating means, whereby, on alteration of the volume of the air chamber, air is caused to pass through the sound generating means, thereby generating a sound. Preferably, there is provided a sound generating doll, which comprises a doll body having therein a variable volume air chamber and, in pneumatic connection with the interior of the container, a pneumatic sound generating means, the air chamber being clamped between a front receiving rod extending from a body part and a rear receiving rod extending from a head body part mounting base, the connecting rod disposed below the head part mounting base and pivotably secured to an upper support rod, an operating rod pivotably secured to a lower support rod and having a pawl rotatably secured to the upper end thereof, and a press rod connected to the lower end of the operating rod.

The present invention enables the provision of a doll which is capable of generating a sneezing sound as the head part thereof moves, without requiring a power source such as an electric cell or power spring, as well as a novel doll which attracts attention and a doll which is simple in construction, easy to manufacture and not apt to be easily damaged by repeated use.

For a better understanding of the present invention and to show how the same may be put into effect, reference will now be made, by way of example, to the accompanying drawings in which:

Figure 1 shows a vertical side sectional view of an embodiment of the present invention, and

Figure 2 shows a perspective view of a portion of the embodiment of Figure 1.

Referring now to the drawings, there is shown a front receiving rod 2 extending from the upper end of a body part 1 of a doll moulded in soft or hard synthetic resin, a rear receiving rod 3 standing upright from the upper surface of a head part mounting base 5 having a connecting rod 4 extending downwardly therefrom. A bellows air chamber 7 having a whistle 6, which generates a sound when air is exhausted, is clamped between the rear receiving rod 3 and the front receiving rod 2. A restoring spring is disposed above the bellows air chamber. Both legs of the head mounting base 5 fit into a mating part 10 of a head part 9 so that the connecting rod 4 enters the body part 1.

An upper support rod 11 is transversely disposed at the upper part of the body part 1, and the connecting rod 4 is pivotably secured to the upper support rod 11 on an upper pivot shaft 12. A lower support rod 13 is disposed transversely at the lower part of the body part 1, and an operating rod 14 is pivotably secured thereto on a lower pivot shaft 15.

A pawl 17 is rotatably mounted on a pawl axis 16 to the upper end of the operating rod 14 so that the corner thereof engages with the lower end of the connecting rod 4. A spring 18 is so disposed that the pawl 17 is always biased as shown in the drawing. An elongate hole 19 is formed at the lower end of the operating rod 14. A shaft core 24 of a press rod 23 transversely disposed between a housing 21 enclosing a spring 20 protruding from the body part 1 and a press button 22 disposed at the front surface of the body part 1 is inserted in the elongate hole 19.

For mounting the press button 22, a recess 25 as shown in the drawing is formed so that the button does not protrude much from the surface of the body part 1. As an alternative, a boss part such as the housing may be formed, and the button may be disposed inside the body part 1.

For operating a doll of such a construction as described above, the press button 22 is depressed from the condition shown in the drawing. The shaft core 24 is then displaced in the elongate hole 19 against the biasing force of the spring 20, and the press rod 23 slides to the left. The operating rod 14 rotates in the clockwise direction about the lower pivot shaft 15, so as to press the pawl 17 toward the lower end of the connecting rod 4. The connecting rod 4 then rotates in the counterclockwise direction about the upper pivot shaft 12, so that the head mounting base 5 formed integrally therewith is inclined toward the left and the head part 9 becomes upwardly oriented. The rear receiving rod 3 standing upright on the head mounting base 5 is also inclined toward the left against the biasing force of a restoring spring 8, and the bellows air chamber 7 sucks air through the whistle 6 and is expanded thereby. When the press button 22 is further depressed and the contact point between the pawl 17 and the lower end of the connecting rod 4 passes an intersecting point 26, their engagement is released. The bellows air chamber 7 is then compressed by a pulling force of short duration exerted by the restoring spring 8. The whistle 6 generates a sound which closely resembles a

sneezing sound, while the head part 9 returns from the slightly upward position to the original position. The internal construction above the connecting rod 4 then returns to its original position as shown in the drawing. After the sound is generated and the press button 22 is released, the press rod 23 is slid to the right by the biasing force of the spring 20, and the operating rod 14 is also rotated in the counterclockwise direction. Since the left side of the pawl 17 is downwardly inclined and the pawl 17 is rotatable, the corner part of the pawl 17 passes over the lower edge of the connecting rod 4. Upon this passage, the engagement between the lower end of the connecting rod 4 and the pawl 17 is returned to the original condition by the biasing force of the spring 18 for repeated operation.

In summary, without requiring an electric cell or a power spring, upon depressing the press button 22, the head part 9 is oriented slightly upwardly, and the bellows air chamber 7 expanded with air is compressed by a force of short duration so that a sneezing sound is generated while the head is simultaneously returned to the original position. Thus, this doll has various effects in that it holds the attention of children, the construction is simple, breakage is rare, and it is relatively inexpensive to manufacture.

CLAIMS

1. A sound generating doll, which comprises a doll body having therein a variable volume air chamber and, in pneumatic connection with the interior of the chamber, a pneumatic sound generating means, whereby, on alteration of the volume of the air chamber, air is caused to pass through the sound generating means, thereby generating a sound.

2. A doll according to Claim 1, wherein the doll body comprises a head part and a main body part and wherein the air chamber is provided in the head part.

3. A doll according to Claim 2, wherein sound is generated by the sound generating means on relative movement of the head part with respect to the main body part.

4. A doll according to Claim 1, 2 or 3, wherein the air chamber is a bellows air chamber.

5. A sound generating doll, which comprises a doll body having therein a variable volume air chamber and, in pneumatic connection with the interior of the container, a pneumatic sound generating means, the air chamber being clamped between a front receiving rod extending from a body part and a rear receiving rod extending from a head body part mounting base, the connecting rod disposed below the head part mounting base and pivotably secured to an upper support rod, an operating rod pivotably secured to a lower support rod and having a pawl rotatably secured to the upper end thereof, and a press rod connected to the lower end of the operating rod.

6. A doll according to Claim 5, wherein the air chamber is a bellows air chamber, wherein the sound generating means is a whistle and wherein, in operation, a sneezing sound is generated.

7. A doll according to Claim 5 or 6, wherein a restoring spring is mounted between the front receiving rod and the rear receiving rod and another restoring spring is provided to act on the pawl.

8. A doll according to Claim 5, 6 or 7, wherein a push button is provided in front of the press rod and a compression spring is interposed between the rear end portion of the press rod and the rear inner wall of the doll body.

9. A sound generating doll, substantially as hereinbefore described with reference to the accompanying drawings.

10. Any novel feature or combination of features described herein.

Printed for Her Majesty's Stationery Office by the Courier Press, Leamington Spa, 1981. Published by the Patent Office, 25 Southampton Buildings, London, WC2A 1AY, from which copies may be obtained.