US 20010041586A1

(19) United States

(12) Patent Application Publication (10) Pub. No.: US 2001/0041586 A1

IRUBE et al. (43) Pub. Date: Nov. 15, 2001

(54) COMMUNICATION TERMINAL APPARATUS

(75) Inventors: **AKIRA IRUBE**, YOKOHAMA-SHI (JP); **SHIGENOBU MINAMI**, AYASE-SHI (JP); **OSAMU YAMAGISHI**, TOKYO (JP)

Correspondence Address:
FINNEGAN HENDERSON FARABOW GARRETT & DUNNER
1300 I STREET N W
WASHINGTON, DC 200053315

(73) Assignee: **Kabushiki Kaisha Toshiba**

(*) Notice: This is a publication of a continued prosecution application (CPA) filed under 37 CFR 1.53(d).

(21) Appl. No.: **09/180,180**

(22) PCT Filed: **Mar. 3, 1998**

(86) PCT No.: **PCT/JP98/00874**

(30) **Foreign Application Priority Data**

Mar. 3, 1997 (JP) 9-048127

Jul. 2, 1997 (JP) 9-177198

Publication Classification

(51) **Int. Cl.**[7] **H04M 1/00**

(52) **U.S. Cl.** **455/556**; 455/557

(57) ABSTRACT

A communication terminal apparatus is separated into a housing that is capable of video/voice communications, and a housing that is capable of only voice communications. Since functions of the housing that is capable of only the voice communications are limited, the housing becomes small, can be stored in a pocket or the like, and can immediately go off-hook upon reception of an incoming call. Upon reception of a videophone communication request, the user goes off-hook using the housing that is capable of only the voice communications to immediately make voice communications with the partner terminal, and can switch the communication mode to the video/voice communications using the housing that is capable of the video/voice communications, as needed. Hence, even a communication terminal having a videophone function can comprise a video input/output function without impairing its portability and storability.

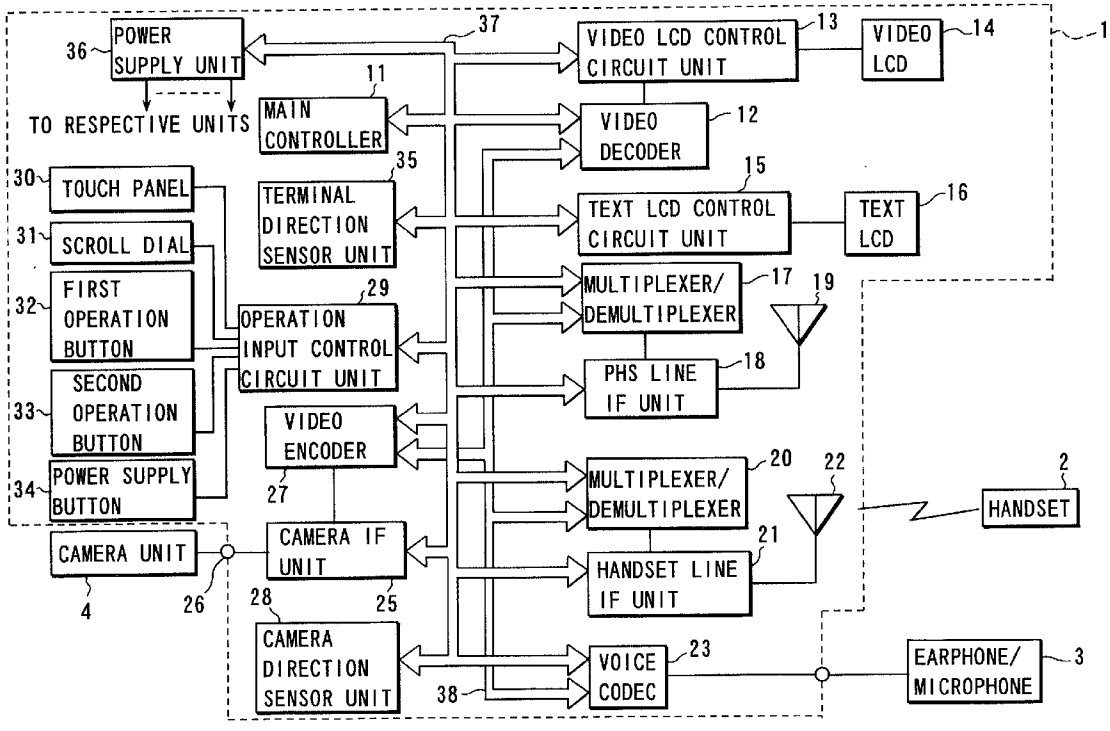

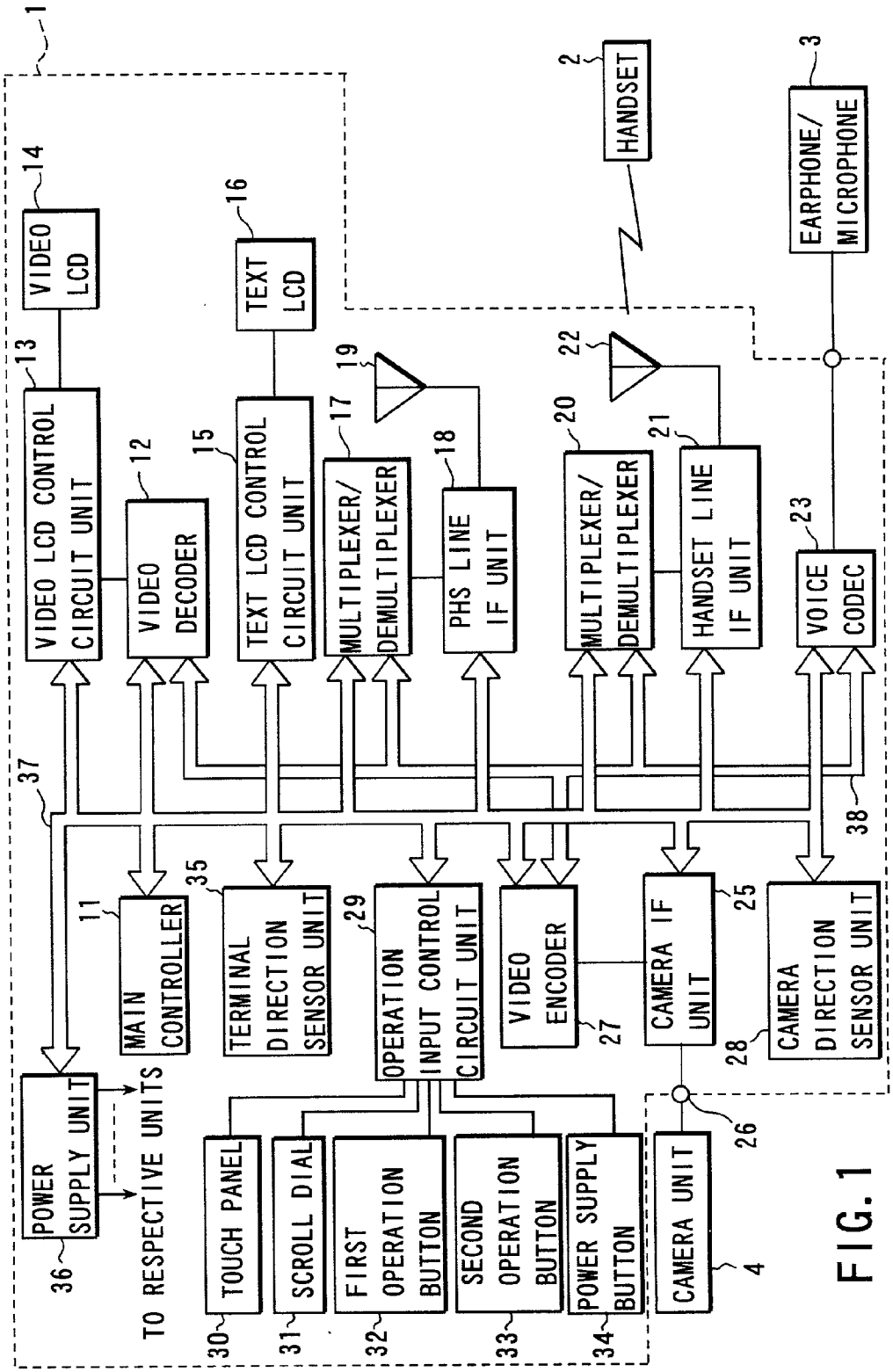
1
2
HANDSET
3
EARPHONE/
MICROPHONE
14
VIDEO
LCD
16
TEXT
LCD
13
VIDEO LCD CONTROL
CIRCUIT UNIT
12
VIDEO
DECODER
15
TEXT LCD CONTROL
CIRCUIT UNIT
17
MULTIPLEXER/
DEMULTIPLEXER
19
18
PHS LINE
IF UNIT
22
20
MULTIPLEXER/
DEMULTIPLEXER
21
HANDSET LINE
IF UNIT
23
VOICE
CODEC
37
38
11
MAIN
CONTROLLER
35
TERMINAL
DIRECTION
SENSOR UNIT
29
OPERATION
INPUT CONTROL
CIRCUIT UNIT
VIDEO
ENCODER
27
CAMERA IF
UNIT
25
CAMERA
DIRECTION
SENSOR UNIT
28
26
36
POWER
SUPPLY UNIT
TO RESPECTIVE UNITS
30
TOUCH PANEL
31
SCROLL DIAL
32
FIRST
OPERATION
BUTTON
33
SECOND
OPERATION
BUTTON
34
POWER SUPPLY
BUTTON
CAMERA UNIT
4

FIG. 1

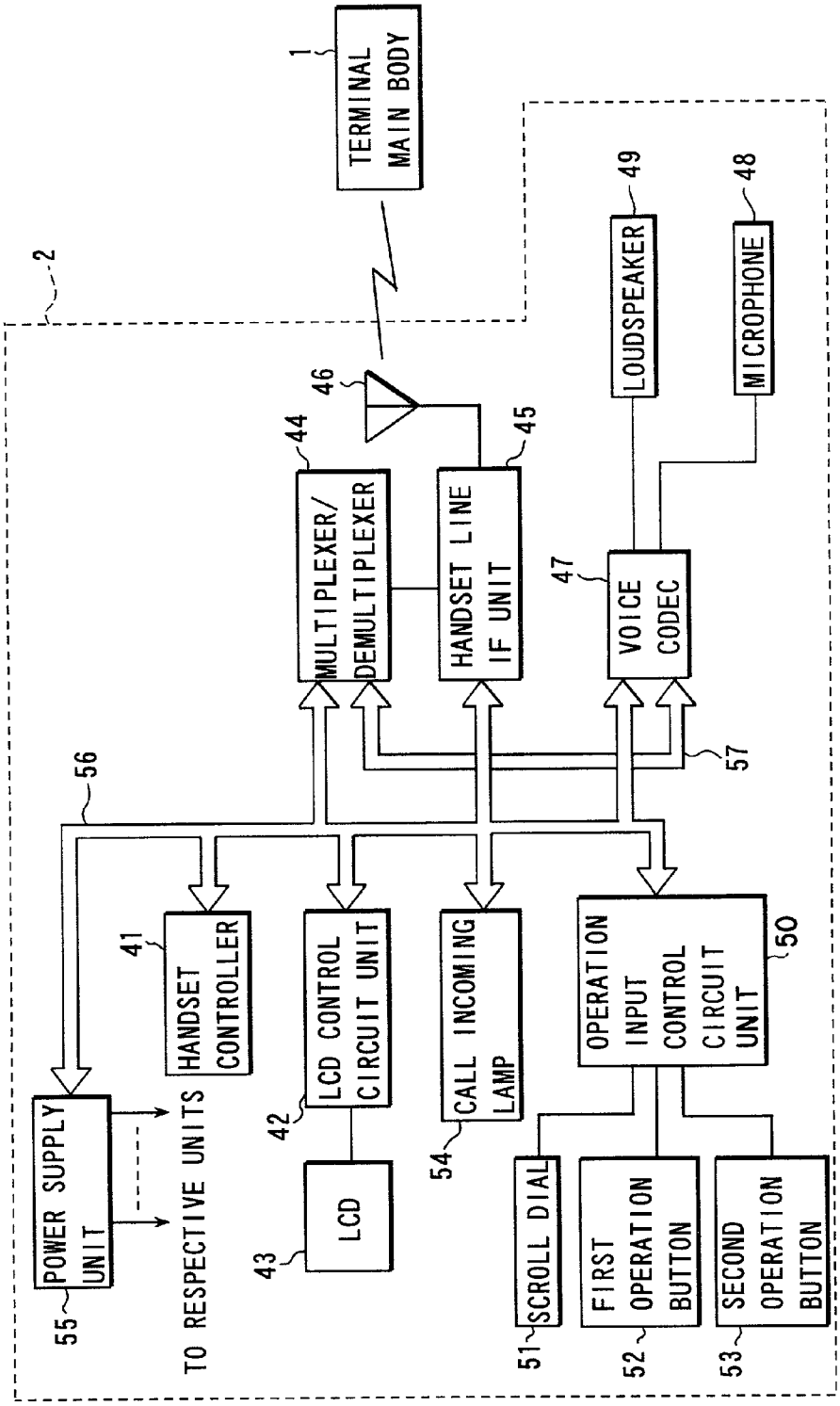
1
TERMINAL MAIN BODY
2
46
44
MULTIPLEXER/ DEMULTIPLEXER
45
HANDSET LINE IF UNIT
49
LOUDSPEAKER
48
MICROPHONE
47
VOICE CODEC
56
57
41
HANDSET CONTROLLER
LCD CONTROL CIRCUIT UNIT
42
CALL INCOMING LAMP
54
OPERATION INPUT CONTROL CIRCUIT UNIT
50
POWER SUPPLY UNIT
55
TO RESPECTIVE UNITS
LCD
43
SCROLL DIAL
51
FIRST OPERATION BUTTON
52
SECOND OPERATION BUTTON
53

FIG. 2

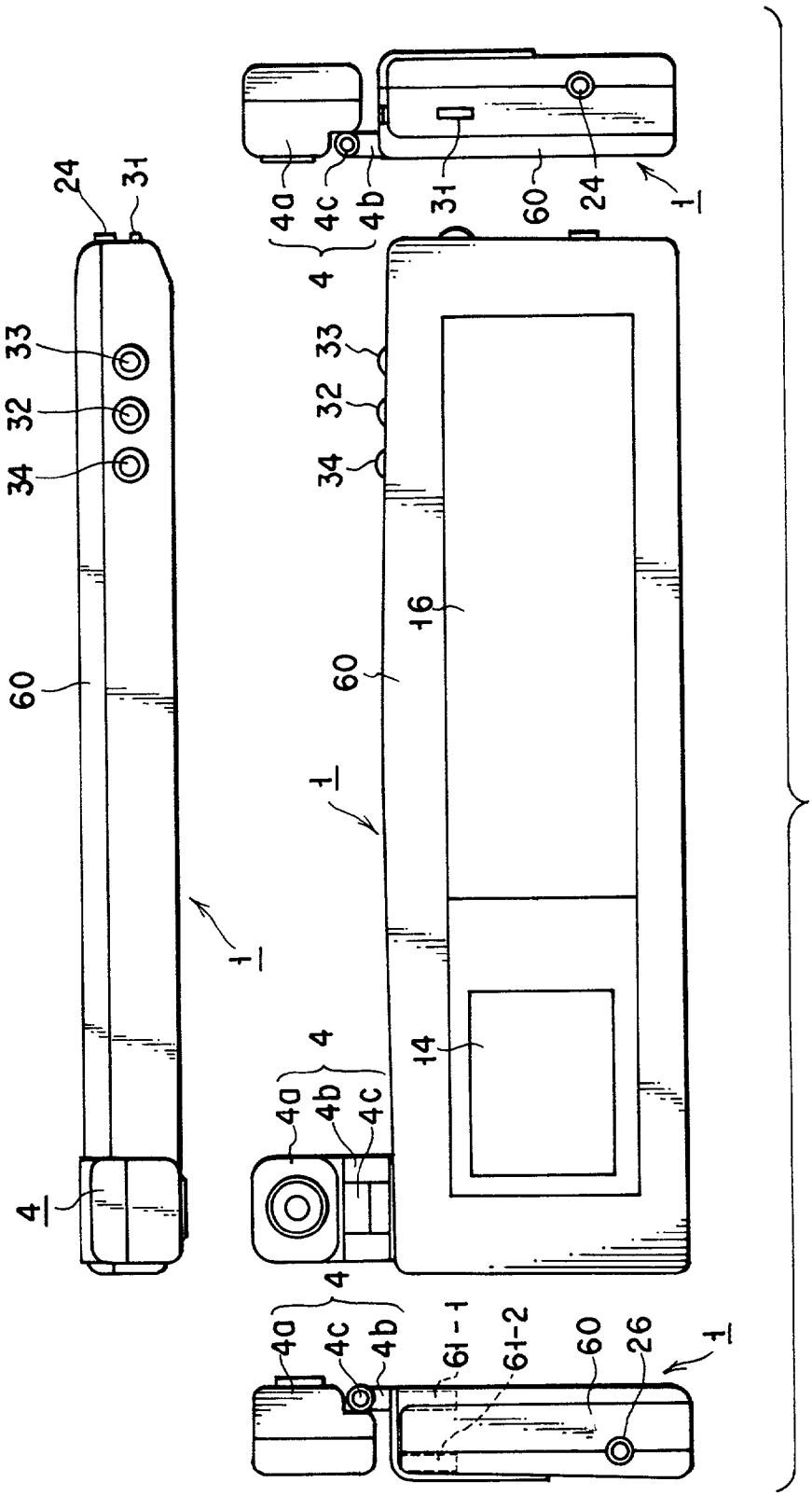

FIG. 3

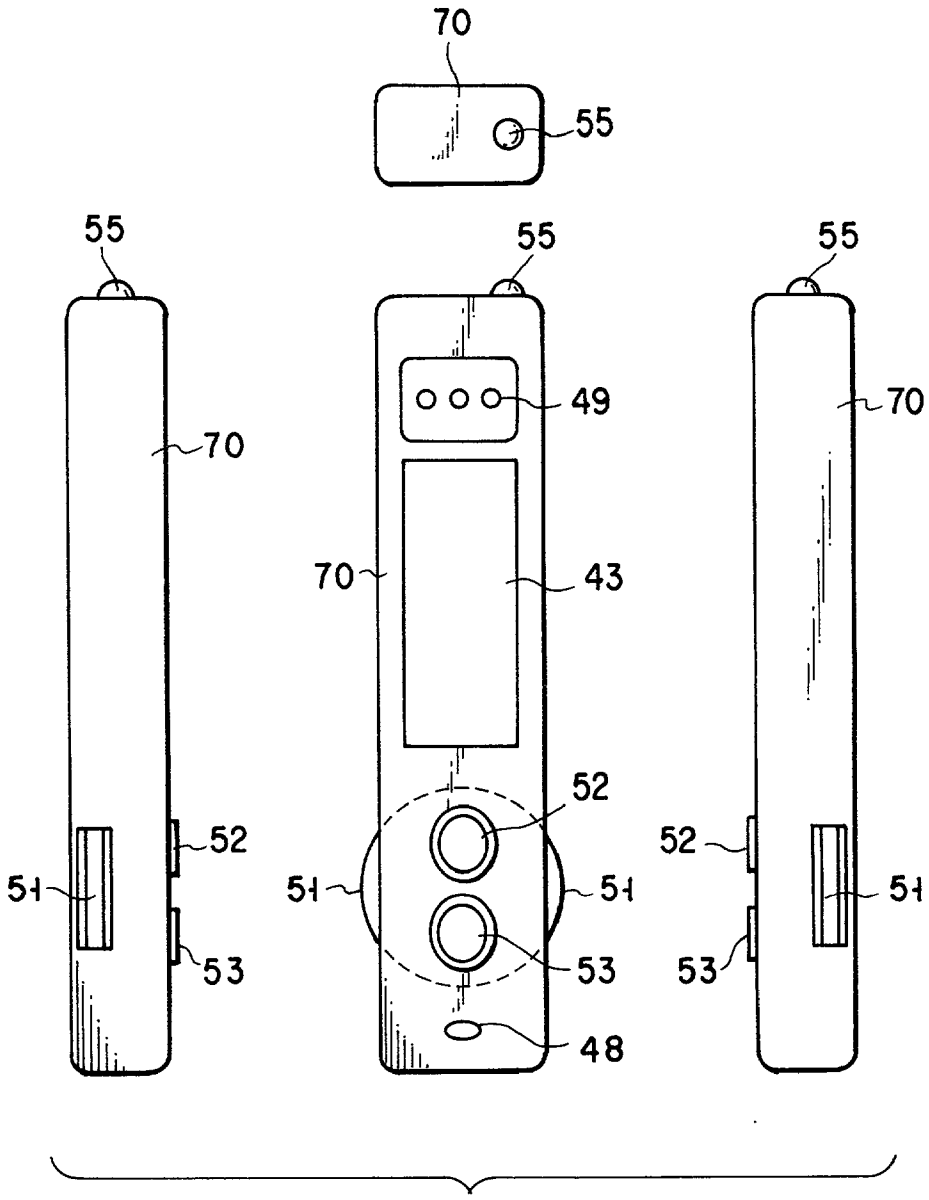

FIG. 4

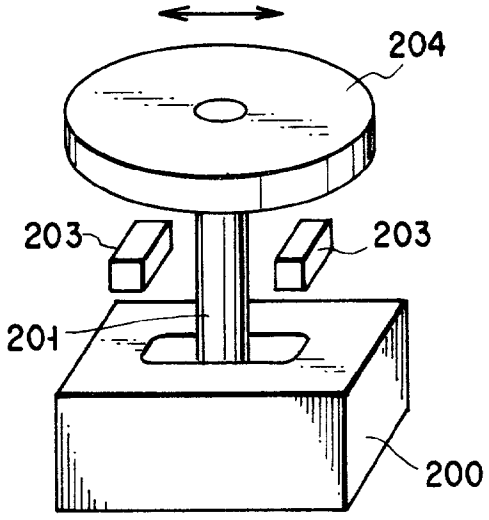

FIG. 5

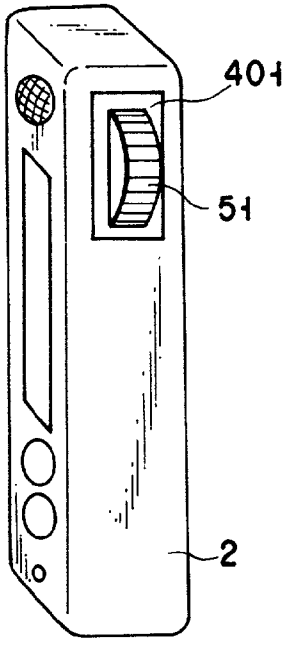

HANDSET SIDE SURFACE

FIG. 6

RIGHT CONTACT	ON	OFF
CLOCKWISE	↓	↑
COUNTER-CLOCKWISE	↑	↓

FIG. 7

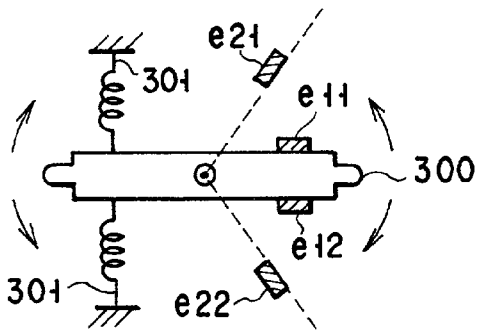

FIG. 8

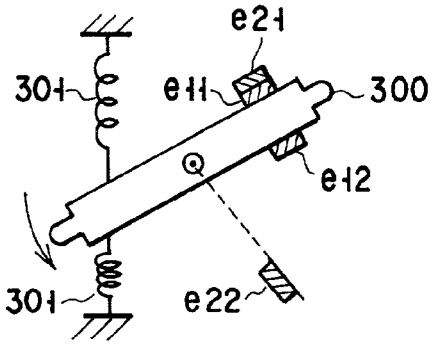

FIG. 9

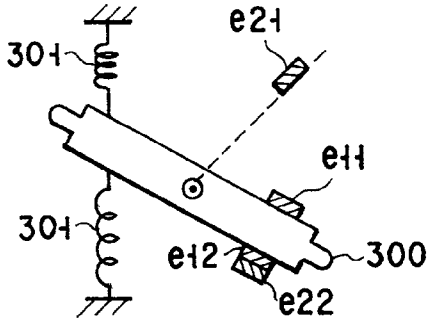

FIG. 10

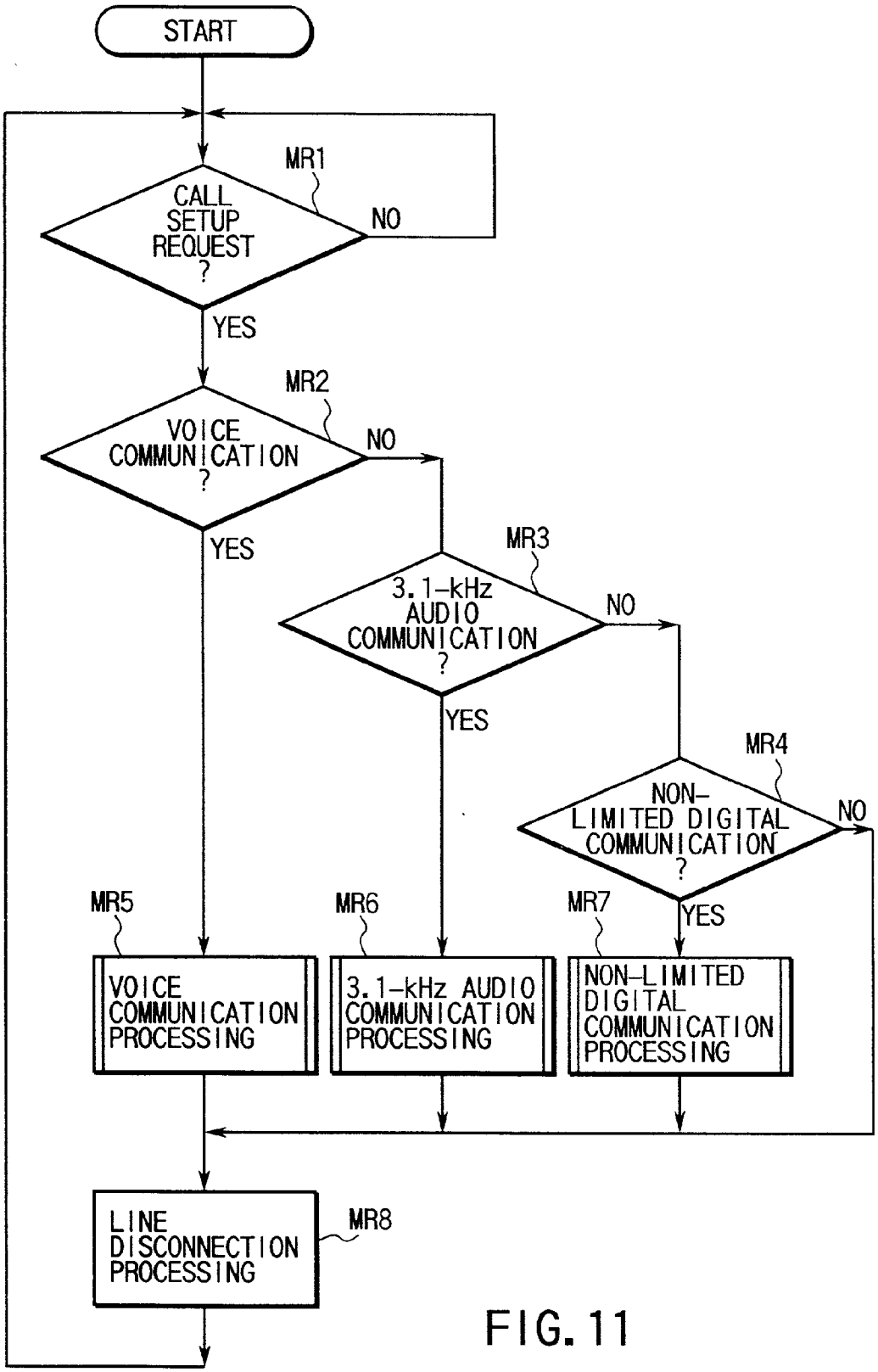
START
MR1
CALL SETUP REQUEST ?
NO
YES
MR2
VOICE COMMUNICATION ?
NO
YES
MR3
3.1-kHz AUDIO COMMUNICATION ?
NO
YES
MR4
NON-LIMITED DIGITAL COMMUNICATION ?
NO
YES
MR5
VOICE COMMUNICATION PROCESSING
MR6
3.1-kHz AUDIO COMMUNICATION PROCESSING
MR7
NON-LIMITED DIGITAL COMMUNICATION PROCESSING
LINE DISCONNECTION PROCESSING
MR8

FIG. 11

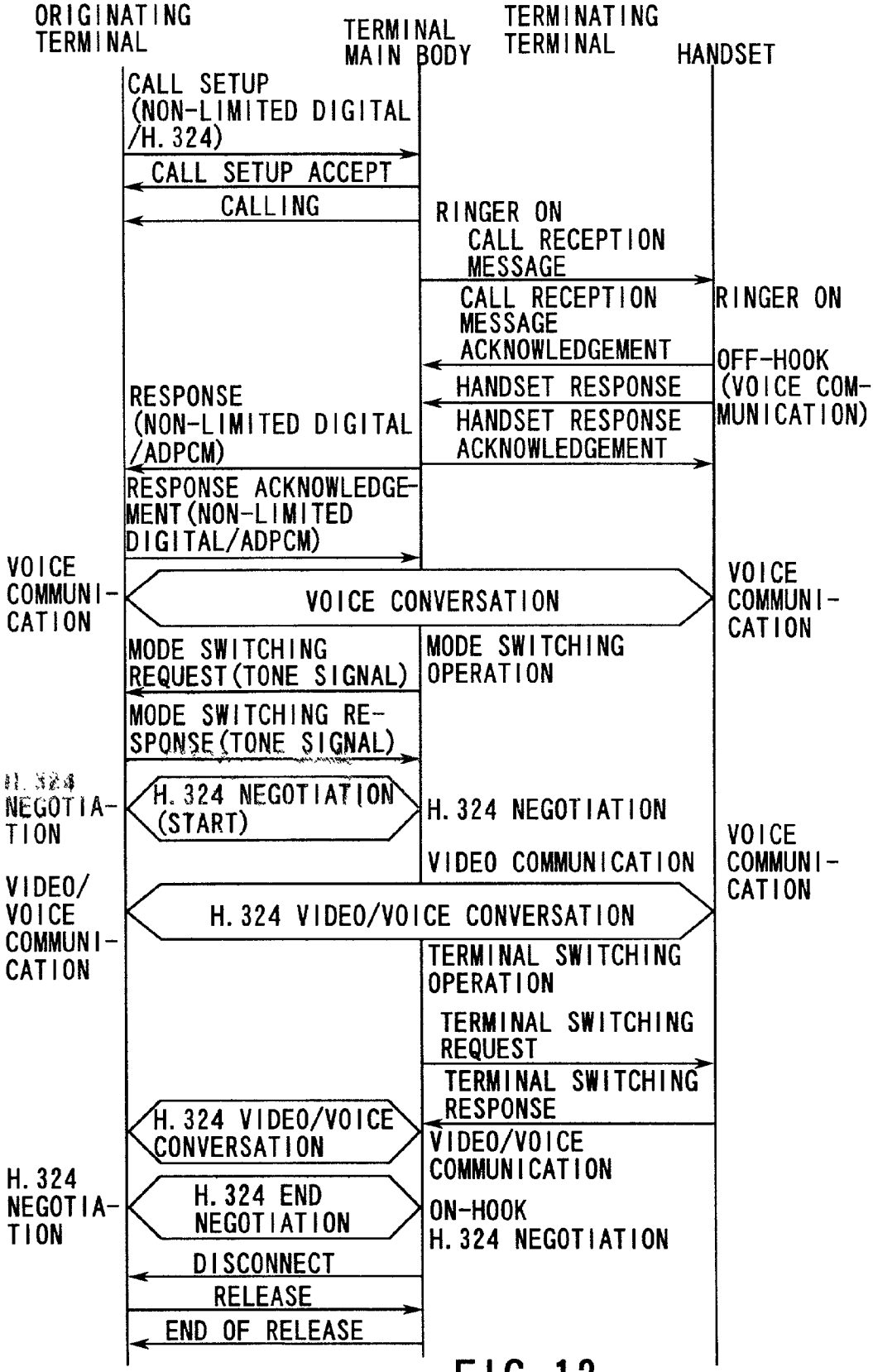
ORIGINATING TERMINAL
TERMINAL MAIN BODY
TERMINATING TERMINAL
HANDSET
CALL SETUP (NON-LIMITED DIGITAL /H.324)
CALL SETUP ACCEPT
CALLING
RINGER ON
CALL RECEPTION MESSAGE
CALL RECEPTION MESSAGE ACKNOWLEDGEMENT
RINGER ON
OFF-HOOK (VOICE COMMUNICATION)
HANDSET RESPONSE
HANDSET RESPONSE ACKNOWLEDGEMENT
RESPONSE (NON-LIMITED DIGITAL /ADPCM)
RESPONSE ACKNOWLEDGEMENT (NON-LIMITED DIGITAL/ADPCM)
VOICE COMMUNICATION
VOICE CONVERSATION
VOICE COMMUNICATION
MODE SWITCHING REQUEST (TONE SIGNAL)
MODE SWITCHING OPERATION
MODE SWITCHING RESPONSE (TONE SIGNAL)
H.324 NEGOTIATION
H.324 NEGOTIATION (START)
H.324 NEGOTIATION
VIDEO COMMUNICATION
VOICE COMMUNICATION
VIDEO/VOICE COMMUNICATION
H.324 VIDEO/VOICE CONVERSATION
TERMINAL SWITCHING OPERATION
TERMINAL SWITCHING REQUEST
TERMINAL SWITCHING RESPONSE
H.324 VIDEO/VOICE CONVERSATION
VIDEO/VOICE COMMUNICATION
H.324 NEGOTIATION
H.324 END NEGOTIATION
ON-HOOK
H.324 NEGOTIATION
DISCONNECT
RELEASE
END OF RELEASE

FIG. 12

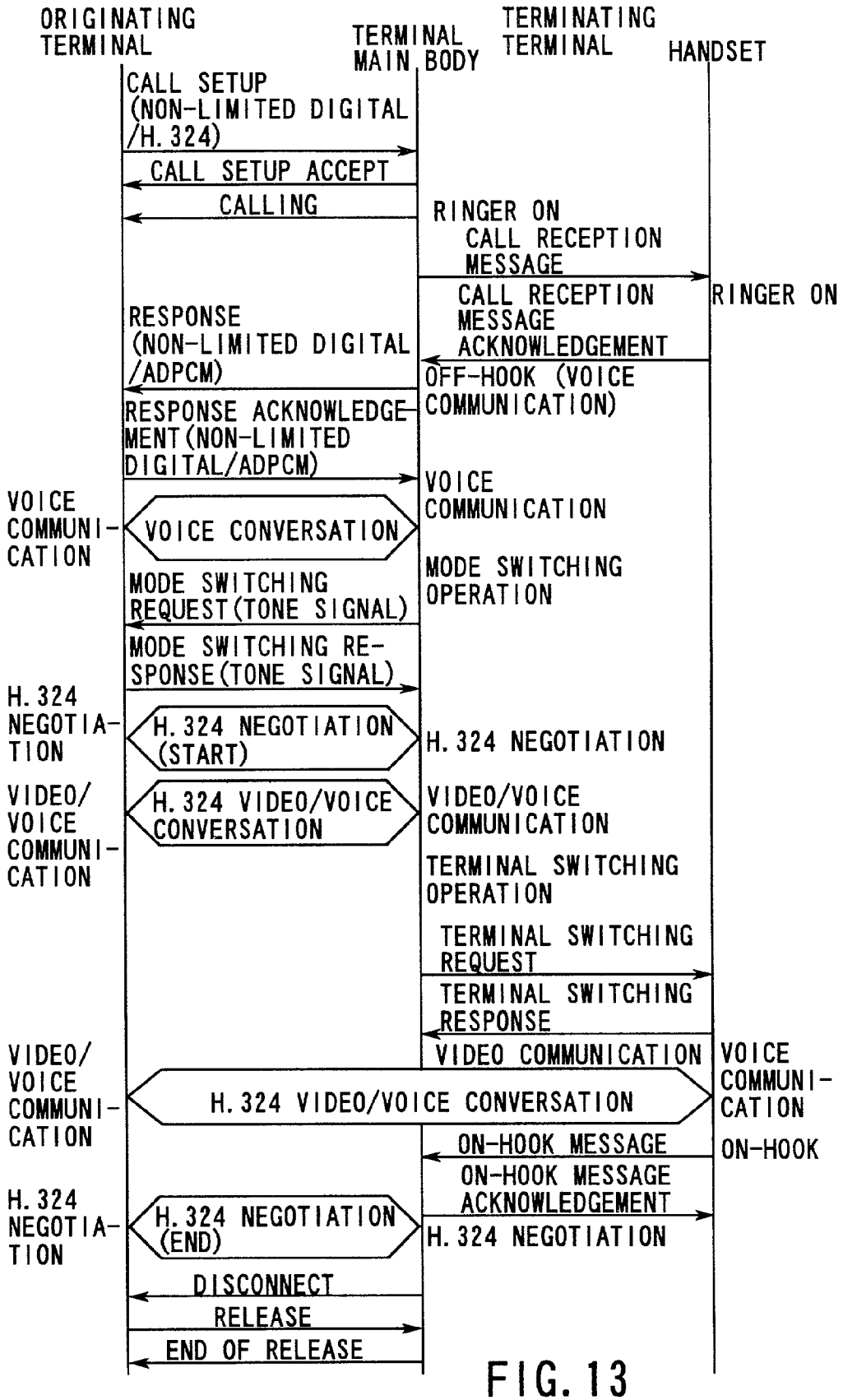
ORIGINATING TERMINAL
TERMINAL MAIN BODY
TERMINATING TERMINAL
HANDSET
CALL SETUP (NON-LIMITED DIGITAL /H.324)
CALL SETUP ACCEPT
CALLING
RINGER ON CALL RECEPTION MESSAGE
RINGER ON
CALL RECEPTION MESSAGE ACKNOWLEDGEMENT
RESPONSE (NON-LIMITED DIGITAL /ADPCM)
OFF-HOOK (VOICE COMMUNICATION)
RESPONSE ACKNOWLEDGEMENT (NON-LIMITED DIGITAL/ADPCM)
VOICE COMMUNICATION
VOICE COMMUNI-CATION
VOICE CONVERSATION
MODE SWITCHING OPERATION
MODE SWITCHING REQUEST (TONE SIGNAL)
MODE SWITCHING RESPONSE (TONE SIGNAL)
H.324 NEGOTIATION
H.324 NEGOTIATION (START)
H.324 NEGOTIATION
VIDEO/ VOICE COMMUNI-CATION
H.324 VIDEO/VOICE CONVERSATION
VIDEO/VOICE COMMUNICATION
TERMINAL SWITCHING OPERATION
TERMINAL SWITCHING REQUEST
TERMINAL SWITCHING RESPONSE
VIDEO COMMUNICATION
VOICE COMMUNI-CATION
VIDEO/ VOICE COMMUNI-CATION
H.324 VIDEO/VOICE CONVERSATION
ON-HOOK MESSAGE
ON-HOOK
ON-HOOK MESSAGE ACKNOWLEDGEMENT
H.324 NEGOTIATION
H.324 NEGOTIATION (END)
H.324 NEGOTIATION
DISCONNECT
RELEASE
END OF RELEASE

FIG. 13

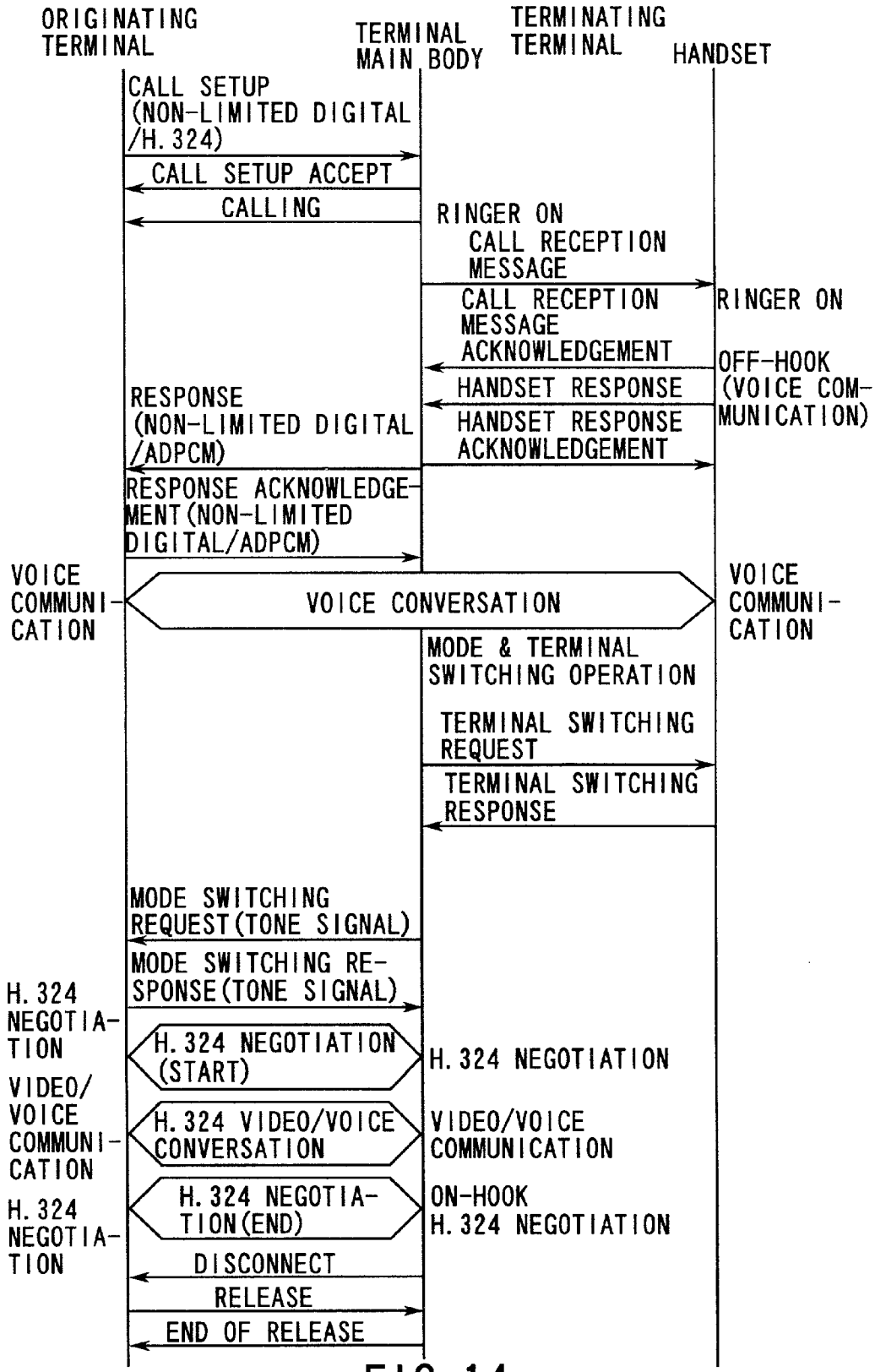
ORIGINATING TERMINAL
TERMINAL MAIN BODY
TERMINATING TERMINAL
HANDSET
CALL SETUP (NON-LIMITED DIGITAL /H.324)
CALL SETUP ACCEPT
CALLING
RINGER ON CALL RECEPTION MESSAGE
RINGER ON
CALL RECEPTION MESSAGE ACKNOWLEDGEMENT
OFF-HOOK (VOICE COMMUNICATION)
HANDSET RESPONSE
HANDSET RESPONSE ACKNOWLEDGEMENT
RESPONSE (NON-LIMITED DIGITAL /ADPCM)
RESPONSE ACKNOWLEDGEMENT (NON-LIMITED DIGITAL/ADPCM)
VOICE COMMUNICATION
VOICE CONVERSATION
VOICE COMMUNICATION
MODE & TERMINAL SWITCHING OPERATION
TERMINAL SWITCHING REQUEST
TERMINAL SWITCHING RESPONSE
MODE SWITCHING REQUEST (TONE SIGNAL)
MODE SWITCHING RESPONSE (TONE SIGNAL)
H.324 NEGOTIATION
H.324 NEGOTIATION (START)
H.324 NEGOTIATION
VIDEO/VOICE COMMUNICATION
H.324 VIDEO/VOICE CONVERSATION
VIDEO/VOICE COMMUNICATION
H.324 NEGOTIATION
H.324 NEGOTIATION (END)
ON-HOOK
H.324 NEGOTIATION
DISCONNECT
RELEASE
END OF RELEASE

FIG. 14

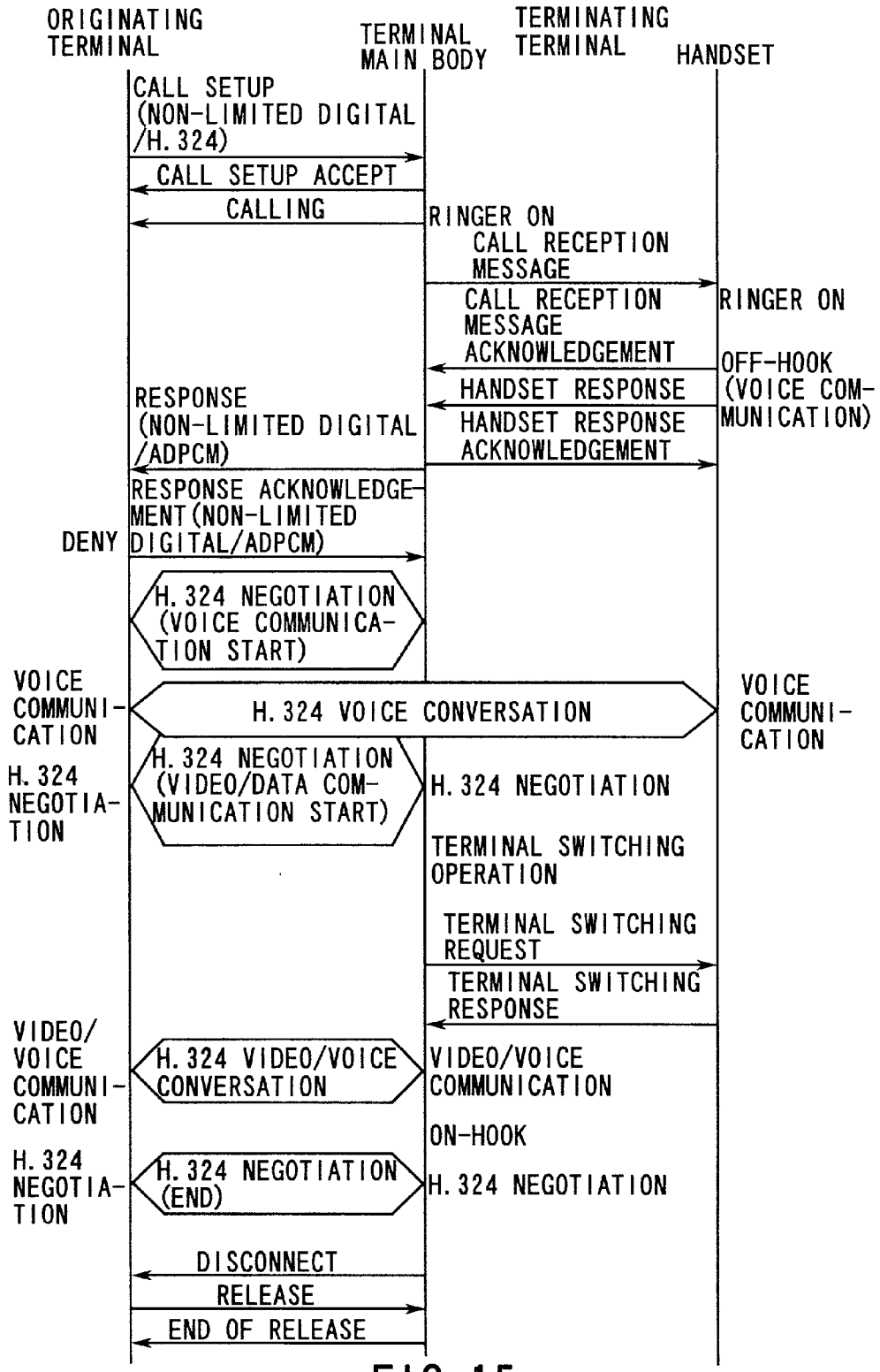
ORIGINATING TERMINAL
TERMINAL MAIN BODY
TERMINATING TERMINAL
HANDSET
CALL SETUP (NON-LIMITED DIGITAL /H.324)
CALL SETUP ACCEPT
CALLING
RINGER ON
CALL RECEPTION MESSAGE
RINGER ON
CALL RECEPTION MESSAGE ACKNOWLEDGEMENT
OFF-HOOK (VOICE COMMUNICATION)
HANDSET RESPONSE
HANDSET RESPONSE ACKNOWLEDGEMENT
RESPONSE (NON-LIMITED DIGITAL /ADPCM)
RESPONSE ACKNOWLEDGEMENT (NON-LIMITED DIGITAL/ADPCM)
DENY
H.324 NEGOTIATION (VOICE COMMUNICATION START)
VOICE COMMUNICATION
H.324 VOICE CONVERSATION
VOICE COMMUNICATION
H.324 NEGOTIATION
H.324 NEGOTIATION (VIDEO/DATA COMMUNICATION START)
H.324 NEGOTIATION
TERMINAL SWITCHING OPERATION
TERMINAL SWITCHING REQUEST
TERMINAL SWITCHING RESPONSE
VIDEO/VOICE COMMUNICATION
H.324 VIDEO/VOICE CONVERSATION
VIDEO/VOICE COMMUNICATION
ON-HOOK
H.324 NEGOTIATION
H.324 NEGOTIATION (END)
H.324 NEGOTIATION
DISCONNECT
RELEASE
END OF RELEASE

FIG. 15

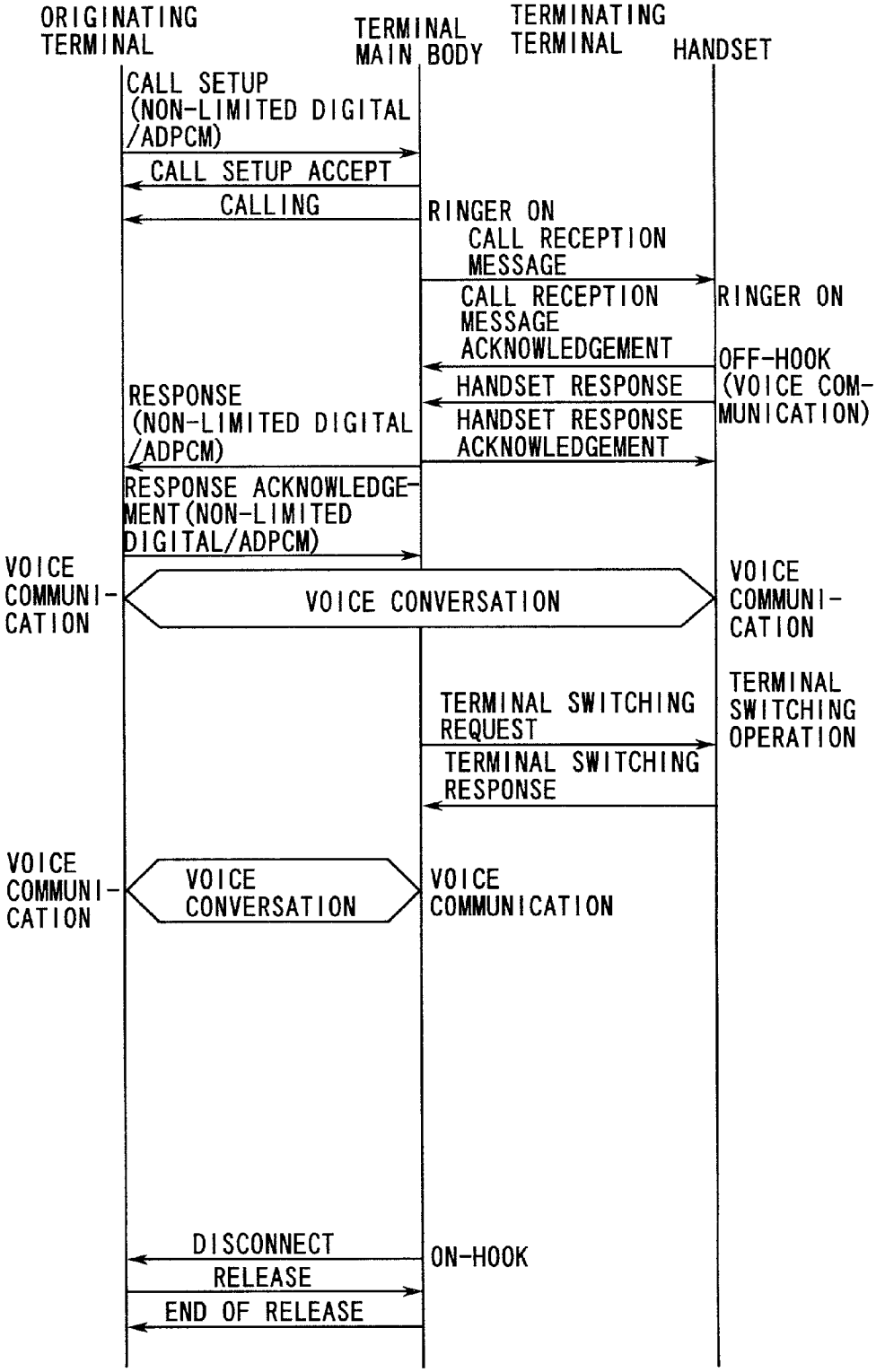
ORIGINATING TERMINAL
TERMINAL MAIN BODY
TERMINATING TERMINAL
HANDSET
CALL SETUP (NON-LIMITED DIGITAL /ADPCM)
CALL SETUP ACCEPT
CALLING
RINGER ON
CALL RECEPTION MESSAGE
RINGER ON
CALL RECEPTION MESSAGE ACKNOWLEDGEMENT
OFF-HOOK (VOICE COMMUNICATION)
HANDSET RESPONSE
HANDSET RESPONSE ACKNOWLEDGEMENT
RESPONSE (NON-LIMITED DIGITAL /ADPCM)
RESPONSE ACKNOWLEDGEMENT (NON-LIMITED DIGITAL/ADPCM)
VOICE COMMUNICATION
VOICE CONVERSATION
VOICE COMMUNICATION
TERMINAL SWITCHING REQUEST
TERMINAL SWITCHING OPERATION
TERMINAL SWITCHING RESPONSE
VOICE COMMUNICATION
VOICE CONVERSATION
VOICE COMMUNICATION
DISCONNECT
ON-HOOK
RELEASE
END OF RELEASE

FIG. 16

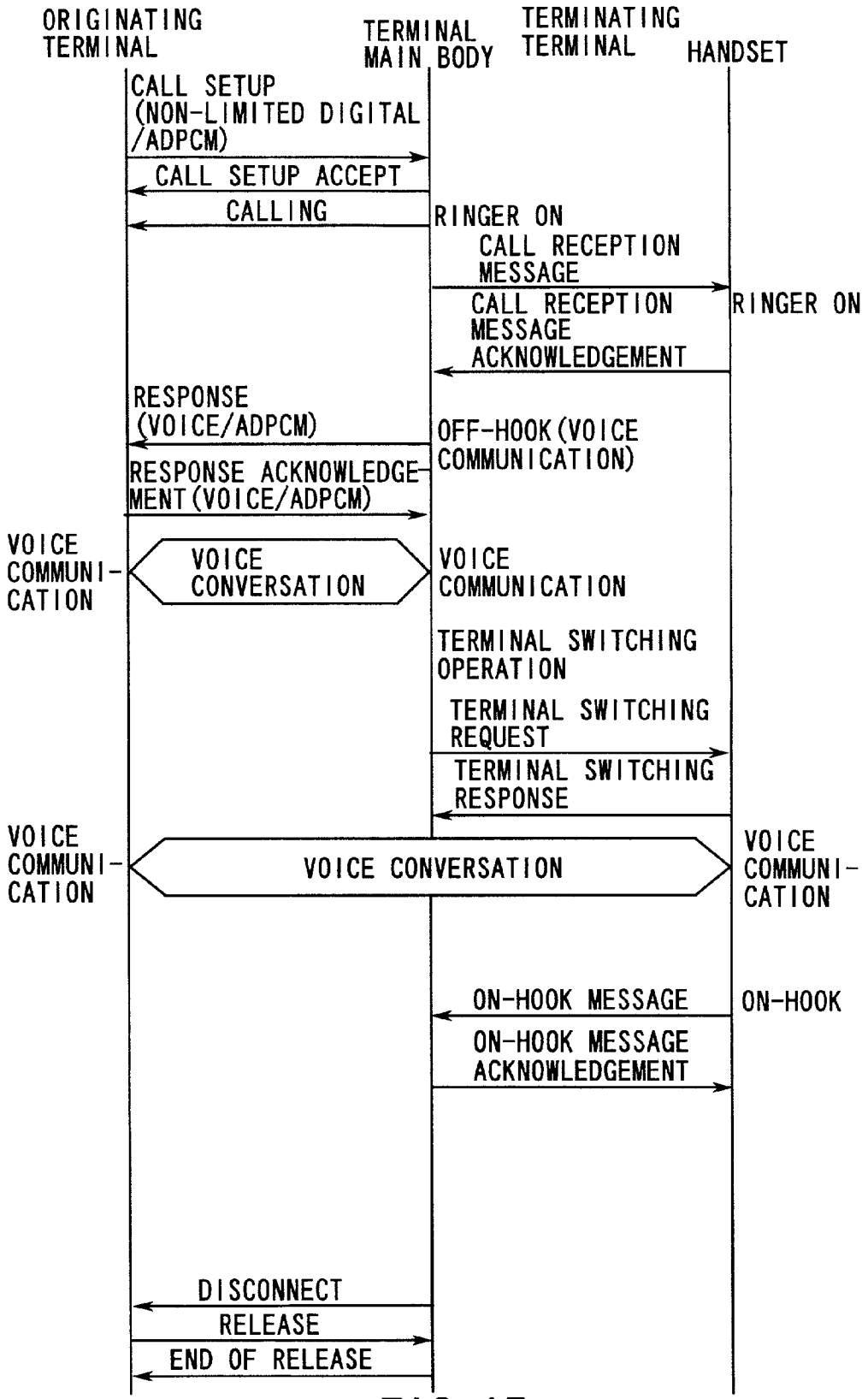
ORIGINATING TERMINAL
TERMINAL MAIN BODY
TERMINATING TERMINAL
HANDSET
CALL SETUP (NON-LIMITED DIGITAL /ADPCM)
CALL SETUP ACCEPT
CALLING
RINGER ON
CALL RECEPTION MESSAGE
CALL RECEPTION MESSAGE ACKNOWLEDGEMENT
RINGER ON
RESPONSE (VOICE/ADPCM)
OFF-HOOK (VOICE COMMUNICATION)
RESPONSE ACKNOWLEDGEMENT (VOICE/ADPCM)
VOICE COMMUNI-CATION
VOICE CONVERSATION
VOICE COMMUNICATION
TERMINAL SWITCHING OPERATION
TERMINAL SWITCHING REQUEST
TERMINAL SWITCHING RESPONSE
VOICE COMMUNI-CATION
VOICE CONVERSATION
VOICE COMMUNI-CATION
ON-HOOK MESSAGE
ON-HOOK
ON-HOOK MESSAGE ACKNOWLEDGEMENT
DISCONNECT
RELEASE
END OF RELEASE

FIG. 17

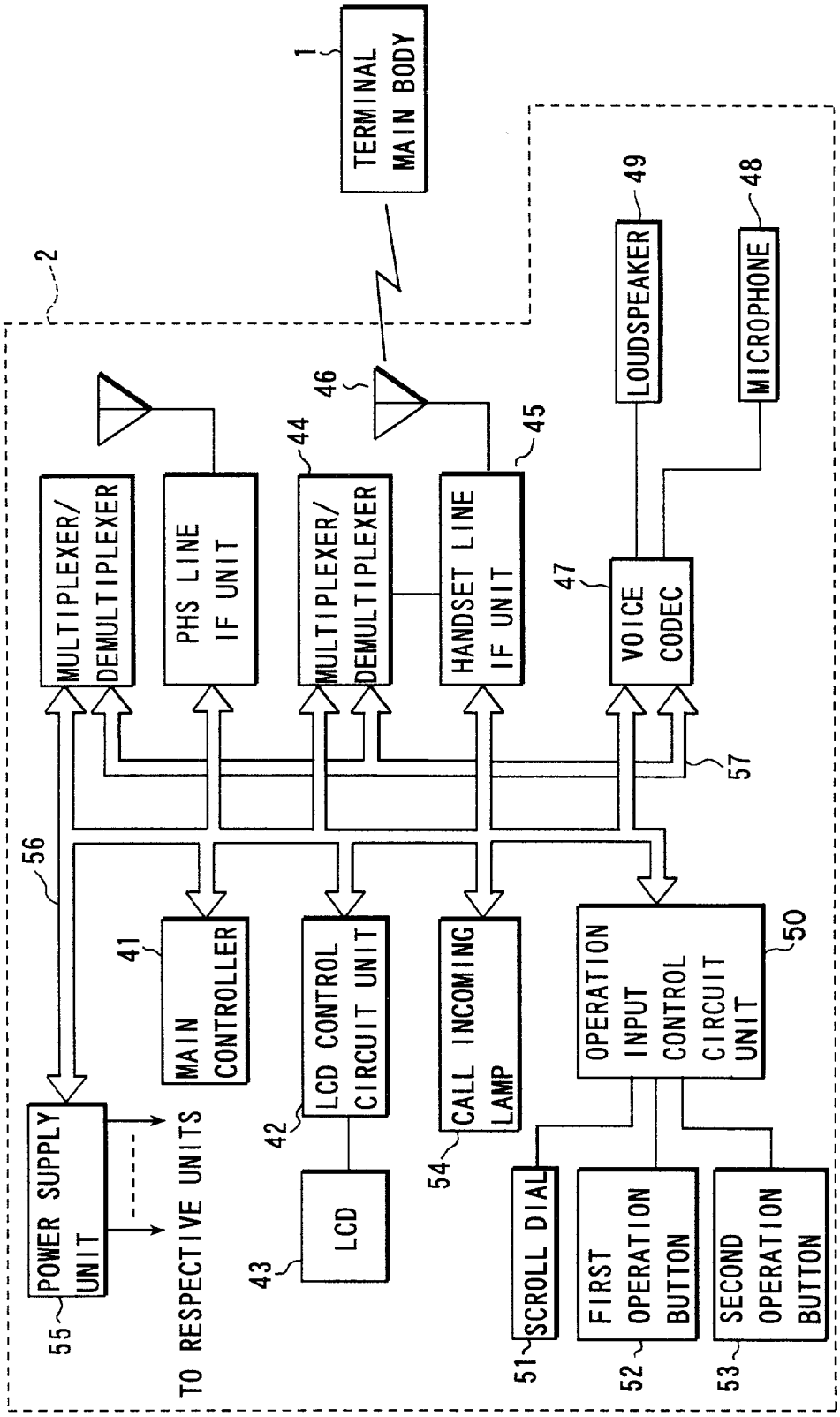
1
TERMINAL MAIN BODY
2
46
45
44
MULTIPLEXER/ DEMULTIPLEXER
PHS LINE IF UNIT
MULTIPLEXER/ DEMULTIPLEXER
HANDSET LINE IF UNIT
47
VOICE CODEC
LOUDSPEAKER
49
MICROPHONE
48
57
56
41
MAIN CONTROLLER
LCD CONTROL CIRCUIT UNIT
42
LCD
43
CALL INCOMING LAMP
54
OPERATION INPUT CONTROL CIRCUIT UNIT
50
POWER SUPPLY UNIT
55
TO RESPECTIVE UNITS
SCROLL DIAL
51
FIRST OPERATION BUTTON
52
SECOND OPERATION BUTTON
53

FIG. 18

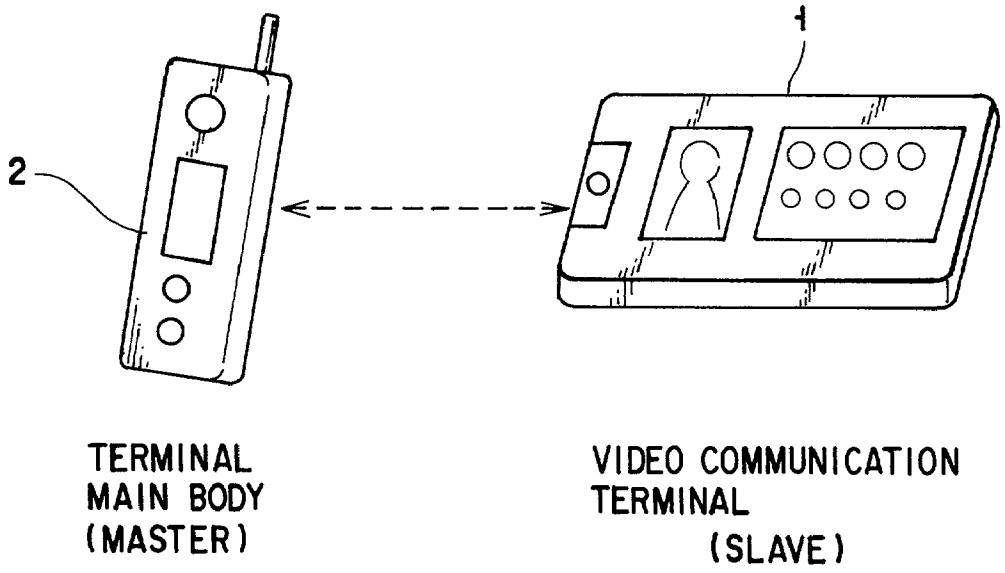
1
2
TERMINAL
MAIN BODY
(MASTER)
VIDEO COMMUNICATION
TERMINAL
(SLAVE)

FIG. 19

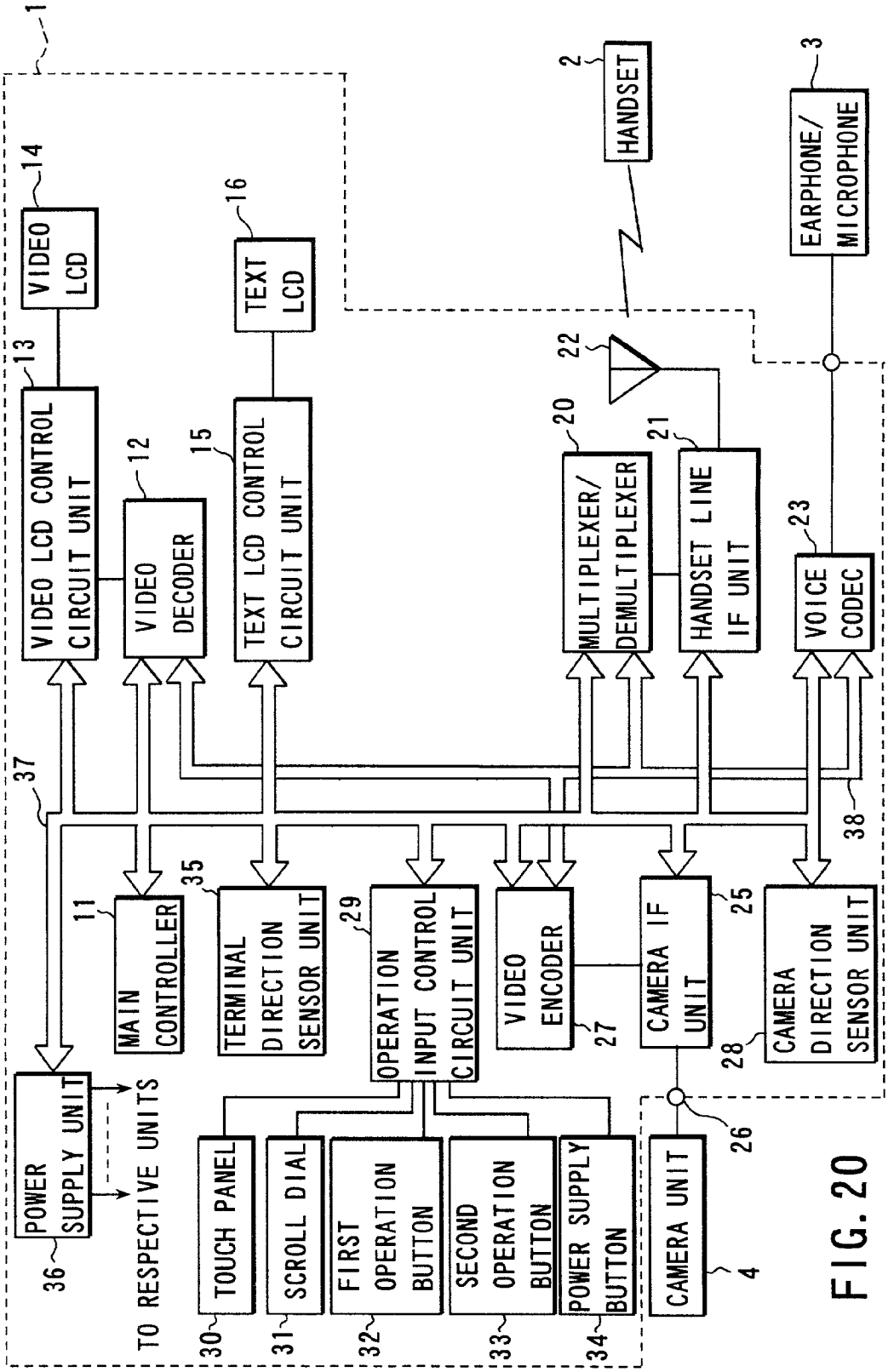
1
2
HANDSET
3
EARPHONE/
MICROPHONE
14
VIDEO
LCD
16
TEXT
LCD
13
VIDEO LCD CONTROL
CIRCUIT UNIT
12
VIDEO
DECODER
15
TEXT LCD CONTROL
CIRCUIT UNIT
22
20
MULTIPLEXER/
DEMULTIPLEXER
21
HANDSET LINE
IF UNIT
23
VOICE
CODEC
37
38
11
MAIN
CONTROLLER
35
TERMINAL
DIRECTION
SENSOR UNIT
29
OPERATION
INPUT CONTROL
CIRCUIT UNIT
VIDEO
ENCODER
27
CAMERA IF
UNIT
25
28
CAMERA
DIRECTION
SENSOR UNIT
POWER
SUPPLY UNIT
36
TO RESPECTIVE UNITS
TOUCH PANEL
30
SCROLL DIAL
31
FIRST
OPERATION
BUTTON
32
SECOND
OPERATION
BUTTON
33
POWER SUPPLY
BUTTON
34
26
CAMERA UNIT
4

FIG. 20

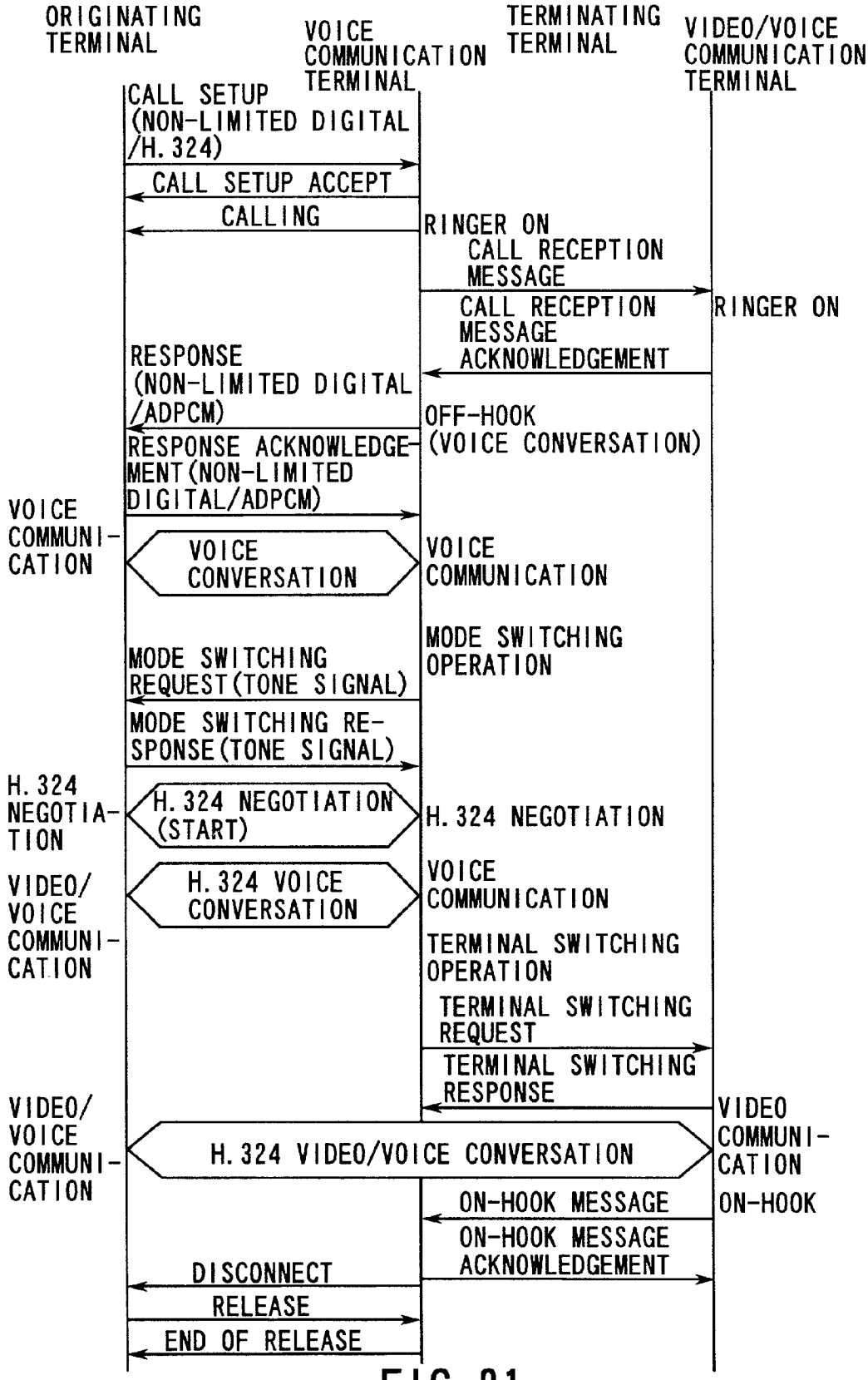
ORIGINATING TERMINAL
VOICE COMMUNICATION TERMINAL
TERMINATING TERMINAL
VIDEO/VOICE COMMUNICATION TERMINAL
CALL SETUP (NON-LIMITED DIGITAL /H.324)
CALL SETUP ACCEPT
CALLING
RINGER ON
CALL RECEPTION MESSAGE
CALL RECEPTION MESSAGE ACKNOWLEDGEMENT
RINGER ON
RESPONSE (NON-LIMITED DIGITAL /ADPCM)
OFF-HOOK (VOICE CONVERSATION)
RESPONSE ACKNOWLEDGEMENT (NON-LIMITED DIGITAL/ADPCM)
VOICE COMMUNICATION
VOICE CONVERSATION
VOICE COMMUNICATION
MODE SWITCHING OPERATION
MODE SWITCHING REQUEST (TONE SIGNAL)
MODE SWITCHING RESPONSE (TONE SIGNAL)
H.324 NEGOTIATION
H.324 NEGOTIATION (START)
H.324 NEGOTIATION
VIDEO/VOICE COMMUNICATION
H.324 VOICE CONVERSATION
VOICE COMMUNICATION
TERMINAL SWITCHING OPERATION
TERMINAL SWITCHING REQUEST
TERMINAL SWITCHING RESPONSE
VIDEO/VOICE COMMUNICATION
H.324 VIDEO/VOICE CONVERSATION
VIDEO COMMUNICATION
ON-HOOK MESSAGE
ON-HOOK
ON-HOOK MESSAGE ACKNOWLEDGEMENT
DISCONNECT
RELEASE
END OF RELEASE

FIG. 21

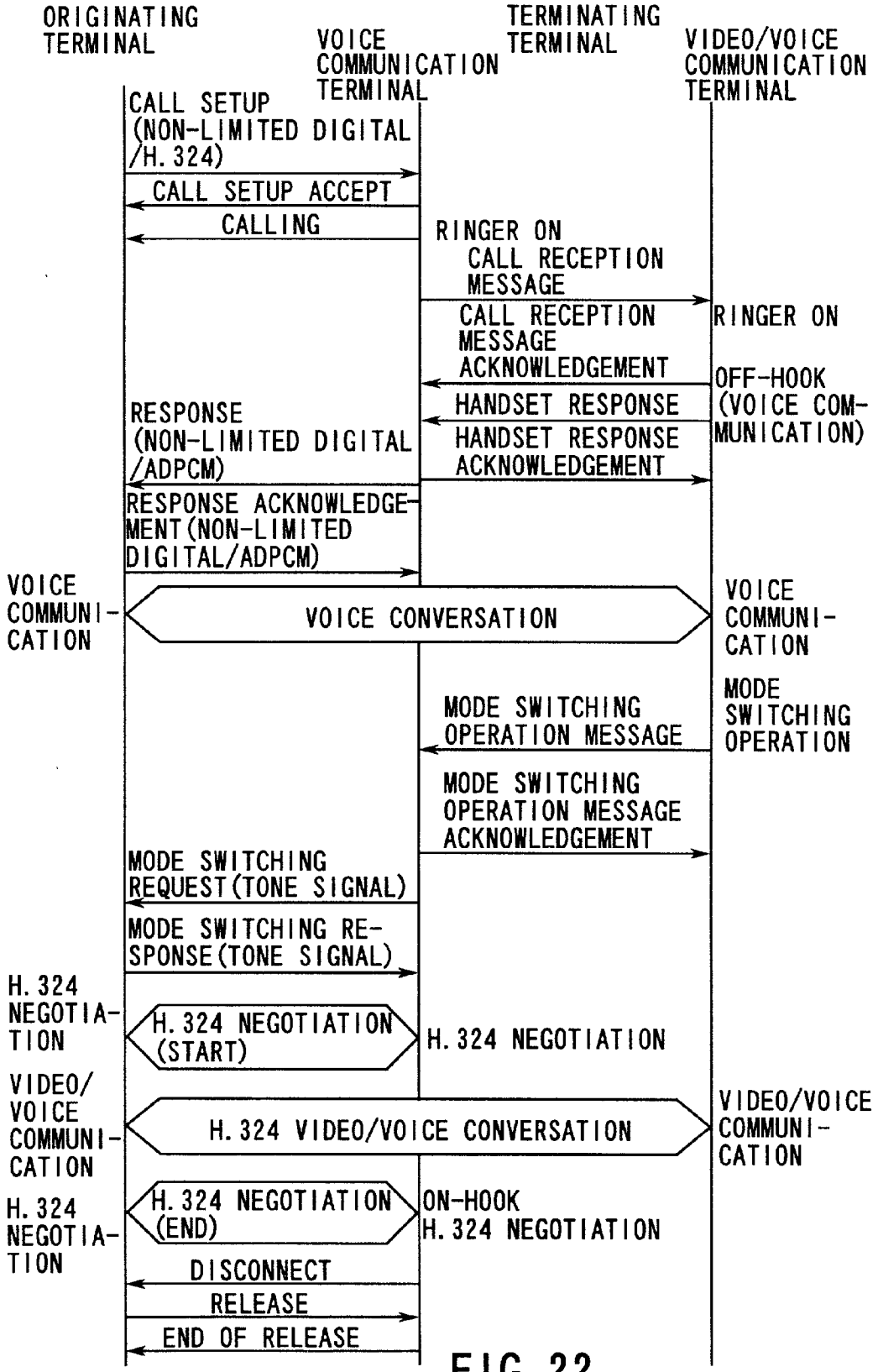
ORIGINATING TERMINAL
VOICE COMMUNICATION TERMINAL
TERMINATING TERMINAL
VIDEO/VOICE COMMUNICATION TERMINAL
CALL SETUP (NON-LIMITED DIGITAL /H.324)
CALL SETUP ACCEPT
CALLING
RINGER ON CALL RECEPTION MESSAGE
CALL RECEPTION MESSAGE ACKNOWLEDGEMENT
RINGER ON
OFF-HOOK (VOICE COMMUNICATION)
HANDSET RESPONSE
HANDSET RESPONSE ACKNOWLEDGEMENT
RESPONSE (NON-LIMITED DIGITAL /ADPCM)
RESPONSE ACKNOWLEDGEMENT (NON-LIMITED DIGITAL/ADPCM)
VOICE COMMUNICATION
VOICE CONVERSATION
VOICE COMMUNICATION
MODE SWITCHING OPERATION MESSAGE
MODE SWITCHING OPERATION
MODE SWITCHING OPERATION MESSAGE ACKNOWLEDGEMENT
MODE SWITCHING REQUEST (TONE SIGNAL)
MODE SWITCHING RESPONSE (TONE SIGNAL)
H.324 NEGOTIATION
H.324 NEGOTIATION (START)
H.324 NEGOTIATION
VIDEO/VOICE COMMUNICATION
H.324 VIDEO/VOICE CONVERSATION
VIDEO/VOICE COMMUNICATION
H.324 NEGOTIATION
H.324 NEGOTIATION (END)
ON-HOOK
H.324 NEGOTIATION
DISCONNECT
RELEASE
END OF RELEASE

FIG. 22

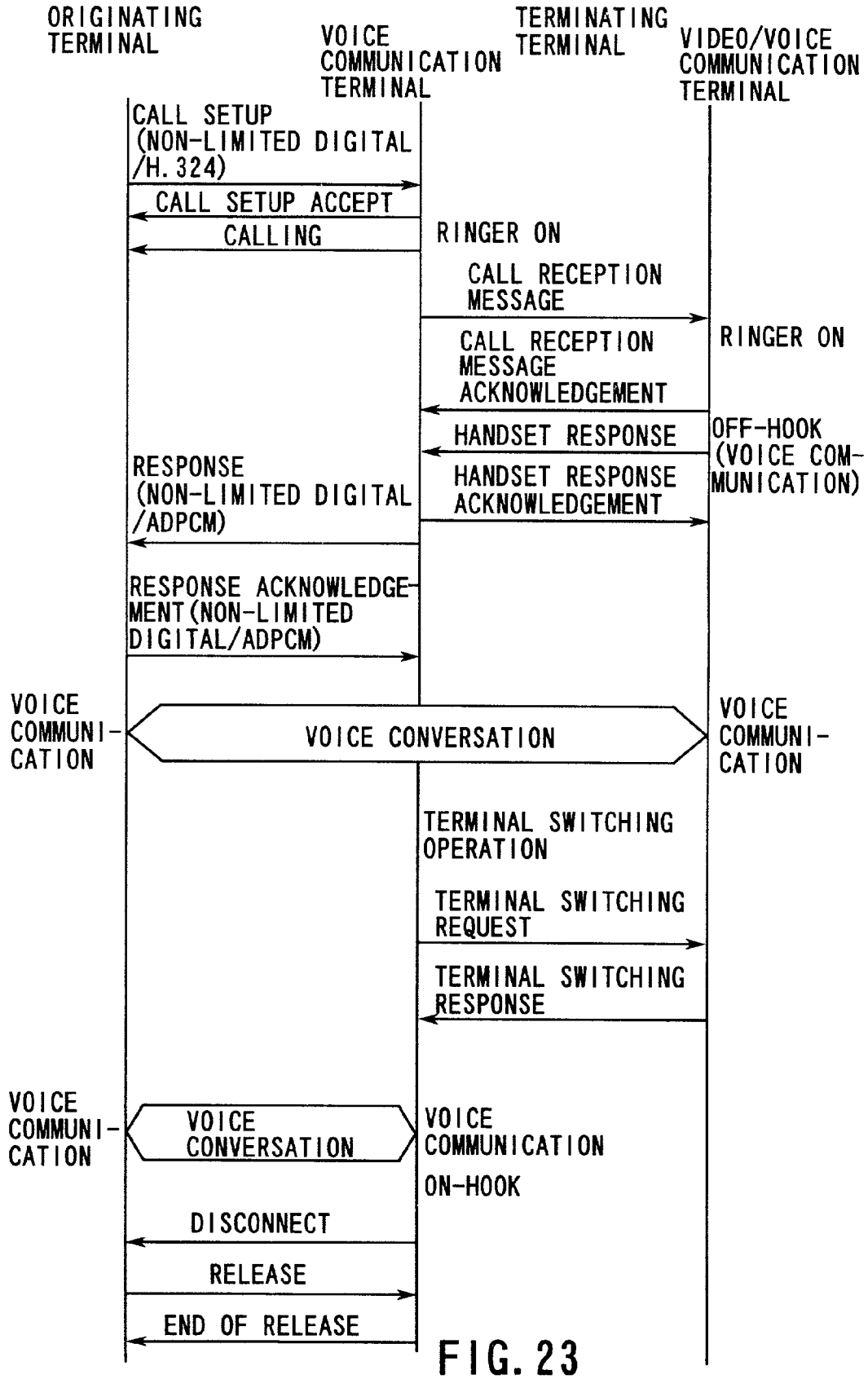
ORIGINATING TERMINAL
VOICE COMMUNICATION TERMINAL
TERMINATING TERMINAL
VIDEO/VOICE COMMUNICATION TERMINAL
CALL SETUP (NON-LIMITED DIGITAL /H.324)
CALL SETUP ACCEPT
CALLING
RINGER ON
CALL RECEPTION MESSAGE
RINGER ON
CALL RECEPTION MESSAGE ACKNOWLEDGEMENT
HANDSET RESPONSE
OFF-HOOK (VOICE COMMUNICATION)
RESPONSE (NON-LIMITED DIGITAL /ADPCM)
HANDSET RESPONSE ACKNOWLEDGEMENT
RESPONSE ACKNOWLEDGEMENT (NON-LIMITED DIGITAL/ADPCM)
VOICE COMMUNICATION
VOICE CONVERSATION
VOICE COMMUNICATION
TERMINAL SWITCHING OPERATION
TERMINAL SWITCHING REQUEST
TERMINAL SWITCHING RESPONSE
VOICE COMMUNICATION
VOICE CONVERSATION
VOICE COMMUNICATION
ON-HOOK
DISCONNECT
RELEASE
END OF RELEASE

FIG. 23

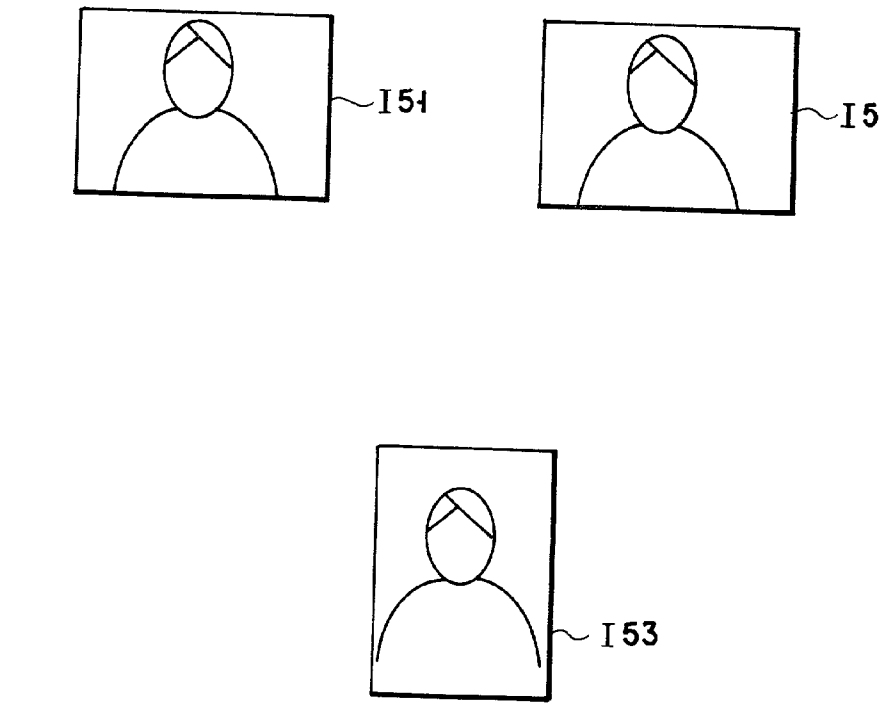

FIG. 24

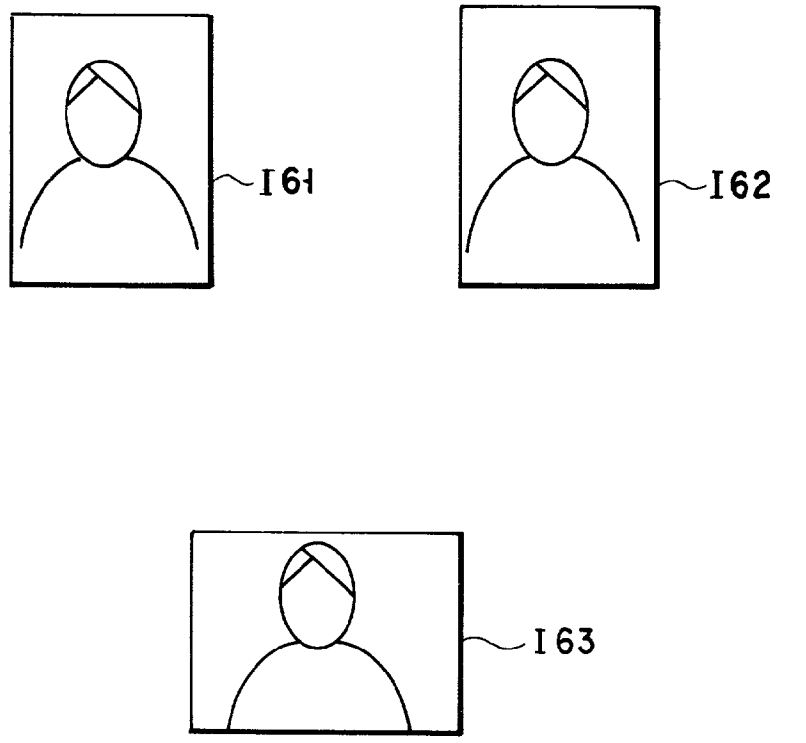

FIG. 25

COMMUNICATION TERMINAL APPARATUS

TECHNICAL FIELD

[0001] The present invention relates to a communication terminal apparatus combined with a handset with high portability.

BACKGROUND ART

[0002] When a so-called videophone function or the like is to be equipped in a communication terminal apparatus such as a PHS (Personal Handyphone System), portable terminal (cordless telephone), or the like that uses radio waves, a camera and display device are required, and its housing inevitably becomes larger than a terminal with a telephone function alone. For this reason, a radio communication terminal with a videophone function has poor portability and storability, and is not easy to use.

DISCLOSURE OF INVENTION

[0003] The present invention has been made in consideration of the above situation, and has as its object to provide a communication terminal apparatus whose portability and storability do not deteriorate even when it has a videophone function or the like.

[0004] According to the present invention, a communication terminal system in which one communication terminal is constructed by at least first and second housings, is characterized in that the first housing comprises radio communication means for making a communication with another communication terminal by radio, and first communication means for making a communication with a housing other than the first housing, the second housing comprises second communication means for making a communication with a housing other than the second housing, and the first housing can make a video communication including at least a moving image and/or still image with another communication terminal, the second housing can make at least a voice communication with the other communication terminal, or the first housing can make at least a voice communication with another communication terminal, and the second housing can make a video communication including at least the moving image and/or still image with another terminal.

[0005] With this communication terminal system, the housing that is capable of voice communications alone is small by limiting its functions, and can be stored in, e.g., a pocket. Also, upon reception of an incoming call, this housing allows the user to immediately go off-hook. Even upon reception of a videophone communication request, the user goes off-hook using the housing that is capable of voice communications alone, and can switch the communication mode to a video/voice communication mode using the housing that is capable of video/voice communications. Hence, even a communication terminal having a videophone function can comprise a video input/output function without impairing its portability and storability.

[0006] According to the present invention, a communication terminal apparatus comprises display means for displaying information, scroll direction input means for inputting a scroll direction of information to be displayed on the display means, operation direction detection means for detecting an operation direction of the screen scroll direction input means, and display control means for, when the operation direction is a first operation direction and the information scroll direction is a first screen scroll direction, making a display in a first order, when the operation direction is the first operation direction and the information scroll direction is a second screen scroll direction, making a display in a second order, when the operation direction is a second operation direction and the information scroll direction is the first screen scroll direction, making a display in the first order, and when the operation direction is the second operation direction and the information scroll direction is the second screen scroll direction, making a display in the second order.

[0007] According to this communication terminal apparatus, the operation direction detection means can detect whether the screen scroll direction input means is operated from, e.g., right or left direction, and the display control means can scroll the screen in correspondence with the detected operation direction. For this reason, even when the user operates the terminal apparatus while holding it with a hand, very easy operation is assured.

[0008] According to the present invention, a video communication system constructed by interconnecting a video transmission terminal having at least one video input means and video transmission means, and a video reception terminal having at least one video display means and video reception means via a radio communication network or wired communication network, comprises terminal holding direction detection means for detecting a holding direction of the video reception terminal, sending means for sending information indicating the holding direction of the video reception terminal detected by the terminal holding direction detection means to the video transmission terminal, and processing means for processing a video to be transmitted by the video transmission means on the basis of the holding direction information of the video transmission terminal sent from the sending means.

[0009] According to this video communication system, the terminal holding direction detection means detects the holding state of the terminal, and the detected holding state is exchanged between terminals via the communication means. Based on a comparison result of the exchanged holding state information by the comparison means, if the directions of the two terminals do not agree with each other, the processing means processes the displayed image to match the video display directions. Hence, even when the terminal holding directions of the users do not match at the transmitting and receiving sides, images displayed on the two terminals can be prevented from horizontally or vertically inverted.

BRIEF DESCRIPTION OF DRAWINGS

[0010] **FIG. 1** is a block diagram showing the arrangement of principal part of a communication terminal apparatus according to the first embodiment of the present invention;

[0011] **FIG. 2** is a block diagram showing the detailed arrangement of a handset;

[0012] **FIG. 3** is a view showing the outer appearance of a terminal main body and camera unit;

[0013] **FIG. 4** is a view showing the outer appearance of the handset;

[0014] **FIG. 5** is a view showing a mechanism for detecting stress;

[0015] **FIG. 6** is a view showing another example of the arrangement of a stress direction sensor of a scroll dial;

[0016] **FIG. 7** is a table showing the detection method of operation directions on the basis of an output (ON or OFF) from a skin contact sensor;

[0017] **FIG. 8** is a view showing an example of the arrangement of the scroll dial which rotates only a predetermined angle;

[0018] **FIG. 9** is a view showing an example of the arrangement of the scroll dial which rotates only a predetermined angle;

[0019] **FIG. 10** is a view showing an example of the arrangement of the scroll dial which rotates only a predetermined angle;

[0020] **FIG. 11** is a flow chart showing an example of the main routine of a communication terminal system according to the second embodiment of the present invention upon reception of an incoming call;

[0021] **FIG. 12** is a chart showing an example of a switching control sequence upon reception of an incoming call;

[0022] **FIG. 13** is a chart showing an example of a switching control sequence upon reception of an incoming call;

[0023] **FIG. 14** is a chart showing an example of a switching control sequence upon reception of an incoming call;

[0024] **FIG. 15** is a chart showing an example of a switching control sequence upon reception of an incoming call;

[0025] **FIG. 16** is a chart showing an example of a switching control sequence upon reception of an incoming call;

[0026] **FIG. 17** is a chart showing an example of a switching control sequence upon reception of an incoming call;

[0027] **FIG. 18** is a block diagram showing the arrangement of a voice communication terminal according to another example of the arrangement of the communication terminal system;

[0028] **FIG. 19** is a view showing the outer appearance of the communication terminal system;

[0029] **FIG. 20** is a block diagram showing the arrangement of a video/voice communication terminal according to another example of the arrangement of the communication terminal system;

[0030] **FIG. 21** is a chart showing an example of a switching control sequence upon reception of an incoming call;

[0031] **FIG. 22** is a chart showing an example of a switching control sequence upon reception of an incoming call;

[0032] **FIG. 23** is a chart showing an example of a switching control sequence upon reception of an incoming call;

[0033] **FIG. 24** is a view for explaining direction matching of videos according to the third embodiment of the present invention; and

[0034] **FIG. 25** is a view for explaining direction matching of videos according to the third embodiment of the present invention.

BEST MODE OF CARRYING OUT THE INVENTION

[0035] First Embodiment

[0036] **FIG. 1** is a block diagram showing the arrangement of principal part of a communication terminal apparatus according to the first embodiment of the present invention.

[0037] In **FIG. 1**, reference numeral **1** denotes a terminal main body, which has a main controller **11**, video decoder **12**, video LCD control circuit unit **13**, video LCD **14**, text LCD control circuit unit **15**, text LCD **16**, multiplexer/demultiplexer **17**, PHS line interface unit (PHS line I/F unit) **18**, antenna **19**, multiplexer/demultiplexer **20**, handset line interface unit (handset line I/F unit) **21**, antenna **22**, voice codec **23**, earphone/microphone terminal **24**, camera interface unit (camera I/F unit) **25**, camera terminal **26**, video encoder **27**, camera direction sensor unit **28**, operation input control circuit unit **29**, touch panel **30**, scroll dial **31**, first operation button **32**, second operation button **33**, power supply button **34**, terminal direction sensor unit **35**, and power supply unit **36**. Of these units, the main controller **11**, video decoder **12**, video LCD control circuit unit **13**, text LCD control circuit unit **15**, multiplexer/demultiplexer **17**, PHS line interface unit **18**, multiplexer/demultiplexer **20**, handset line interface unit **21**, voice codec **23**, camera interface unit **25**, video encoder **27**, camera direction sensor unit **28**, operation input control circuit unit **29**, terminal direction sensor unit **35**, and power supply unit **36** are connected to each other via a main bus **37**. The video decoder **12**, multiplexer/demultiplexer **17**, multiplexer/demultiplexer **20**, voice codec **23**, and video encoder **27** are connected to each other via a synchronization bus **38**.

[0038] The main controller **11** has a CPU, ROM, RAM, and the like, and systematically controls the respective units of the terminal main body **1**, thus realizing operations of the communication terminal apparatus. The main controller **11** implements processing means for implementing various functions (to be described later) by software processing.

[0039] The video decoder **12** decodes encoded video data, and supplies the decoded video data to the video LCD control circuit unit **13**. The video LCD control circuit unit **13** controls the video LCD **14** to display a video represented by video data supplied from the video decoder **12**. The video LCD **14** comprises a color LCD having a resolution high enough to display a video complying with, e.g., MPEG4, ITU-T recommendation H.263, or the like, and displays a video under the control of the video LCD control circuit unit **13**.

[0040] The text LCD control circuit unit **15** controls the text LCD **16** to display a text image represented by text data

sent from the main controller **11**. The text LCD **16** is a monochrome LCD which is larger and has a lower resolution than the video LCD **14**, and displays a text image under the control of the text LCD control circuit unit **15**.

[**0041**] The multiplexer/demultiplexer **17** has three operation modes including a multimedia communication mode, voice conversation mode, and data communication mode, and operates in the mode designated by the main controller **11**.

[**0042**] In the multimedia communication mode, the multiplexer/demultiplexer **17** multiplexes encoded video data sent from the video encoder **27** via the synchronization bus **38**, encoded voice data sent from the voice codec **23** via the synchronization bus **38**, and other data supplied from the main controller **11** by a predetermined multiplex scheme (e.g., ITU-T recommendation H.221 or H.223, or their modifications), and supplies transmission data obtained as a result of multiplexing to the PHS line interface unit **18**. Also, in the multimedia communication mode, the multiplexer/demultiplexer **17** demultiplexes encoded video data, encoded voice data, and other data from transmission data supplied from the PHS line interface unit **18**, and supplies these data to the video decoder **12**, voice codec **23**, and main controller **11**, respectively.

[**0043**] In the voice conversation mode, the multiplexer/demultiplexer **17** directly supplies encoded voice data sent from the voice codec **23** via the synchronization bus **38** to the PHS line interface unit **18**. Also, in the voice conversation mode, the multiplexer/demultiplexer **17** directly supplies transmission data (encoded voice data) sent from the PHS line interface unit **18** to the voice codec **23**. The PHS line interface unit **18** can be connected to a PHS (Personal Handyphone System) network by radio via the antenna **19**, and performs various kinds of call processing to make communications via the PHS network. Also, the PHS line interface unit **18** exchanges transmission data via a communication path set via the PHS network.

[**0044**] In the data communication mode, the multiplexer/demultiplexer **17** supplies transmission data sent from the main controller **11** via the synchronization bus **38** to the PHS line interface unit **18**, thus transmitting that data to a partner terminal. On the other hand, the multiplexer/demultiplexer **17** can receive transmission data sent from the partner terminal via the PHS line interface unit **18**. The PHS line interface unit **18** can be connected to the PHS network by radio via the antenna **19**, and performs various kinds of call processing to make communications via the PHS network. Also, the PHS line interface unit **18** exchanges transmission data via a communication path set via the PHS network.

[**0045**] The multiplexer/demultiplexer **20** multiplexes encoded voice data supplied from the voice codec **23** via the synchronization bus **38**, and other data supplied from the main controller **11** via the main bus **37** by a predetermined multiplex scheme, and supplies transmission data obtained as a result of multiplexing to the handset line interface unit **21**. Also, the multiplexer/demultiplexer **20** demultiplexes encoded voice data and other data from transmission data sent from the handset line interface unit **21**, and supplies these data to the voice codec **23** and main controller **11**, respectively. The handset line interface unit **21** exchanges transmission data with a handset **2** by radio via the antenna **22**. Note that the radio channel between the terminal main body **1** and handset **2** (to be referred to as a handset channel hereinafter) uses, e.g., specific low-power radio. The multiplex scheme of transmission data exchanged via the handset channel may be a unique one, and may use simple time-division multiplex, ITU-T recommendation H.221 or H.223, or their modifications.

[**0046**] The voice codec **23** has two operation modes, i.e., a multimedia communication mode and voice conversation mode, and operates in the mode designated by the main controller **11**. In the multimedia communication mode, the voice codec **23** converts a voice signal output from an earphone/microphone **3** connected via the earphone/microphone terminal **24** into a digital signal, and encodes the digital signal by a predetermined low-rate voice encoding scheme (e.g., ITU-T recommendation G729) to obtain encoded voice data. The voice codec **23** supplies this encoded voice data to the multiplexer/demultiplexer **17** via the synchronization bus **38**. Also, in the multimedia communication mode, the voice codec **23** decodes a low-rate voice code in encoded voice data supplied from the multiplexer/demultiplexer **17**, and converts the decoded code into an analog signal to obtain a voice signal. The voice codec **23** supplies the voice signal to the earphone/microphone **3**. By contrast, in the voice conversation mode, the voice codec **23** converts a voice signal output from the earphone/microphone **3** connected via the earphone/microphone terminal **24** into a digital signal, and encodes the digital signal by 32-kbps ADPCM (ITU-T recommendation G721) to obtain encoded voice data. The voice codec **23** supplies this encoded voice data to the multiplexer/demultiplexer **17** via the synchronization bus **38**. Also, in the voice conversation mode, the voice codec **23** decodes an ADPCM code in encoded voice data supplied from the multiplexer/demultiplexer **17**, and converts the decoded code into an analog signal to obtain a voice signal. The voice codec **23** supplies this voice signal to the earphone/microphone **3**. Note that the earphone/microphone **3** converts a voice spoken nearby into a voice signal and supplies it to the voice codec **23**, and also outputs a voice signal supplied from the voice codec **23** as a voice. The earphone/microphone **3** is detachable from the terminal main body **1**.

[**0047**] The camera interface unit **25** captures a video signal output from a camera unit **4** connected via the camera terminal **26**, and converts it into a digital signal to obtain video data. The camera interface **25** supplies the video data to the video encoder **27**. The video encoder **27** encodes the video data supplied from the camera interface unit **25** to obtain encoded video data based on MPEG**4**, ITU-T recommendation H.263, or their modified schemes. The video encoder **27** supplies the encoded video data to the video decoder **12** and multiplexer/demultiplexer **17**. Note that the camera unit **4** uses a CCD camera or the like. This camera unit **4** is detachable from the terminal main body **1**. In addition, the camera unit **4** can be attached in two states, i.e., a state wherein the unit **4** senses in the same direction as the side of the display surfaces of the video LCD **14** and text LCD **16**, and a state wherein the unit **4** senses in the direction of the back side opposite to the side of the display surfaces of the video LCD **14** and text LCD **16**. The camera direction sensor unit **28** detects the presence/absence of the attached camera unit **4**, and in which of the two states the camera unit **4** is attached.

[0048] The operation input control circuit unit **29** is connected with the touch panel **30**, scroll dial **31**, first operation button **32**, second operation button **33**, and power supply button **34**. The operation input control circuit unit **29** accepts user's instruction operations at these touch panel **30**, scroll dial **31**, first operation button **32**, second operation button **33**, and power supply button **34**, and informs the main controller **11** of the contents of these instruction operations. The touch panel **30** is overlaid on the display surface of the text LCD **16**, and receives various inputs corresponding to the display contents of the text LCD **16**. The scroll dial **31** accepts a cursor movement instruction, display screen instruction, and the like. The first operation button **32** and second operation button **33** accept inputs of a determination instruction, cancel instruction, and the like. The power supply button **34** accepts an ON/OFF instruction of operation of the terminal main body **1**.

[0049] The terminal direction sensor unit **35** is comprised of, e.g., a mercury switch and the like, and detects the direction of the terminal main body **1**.

[0050] The power supply unit **36** has, e.g., a battery as a power supply, and supplies electric power to the respective units of the terminal main body **1**. The power supply unit **36** turns power supply to the respective units on/off under the control of the main controller **11**. However, the power supply unit **36** always supplies electric power to at least the main controller **11** and operation input control circuit unit **29**.

[0051] **FIG. 2** is a block diagram showing the detailed arrangement of the handset **2**.

[0052] As shown in **FIG. 2**, the handset **2** has a handset controller **41**, LCD control circuit unit **42**, LCD **43**, multiplexer/demultiplexer **44**, handset line interface unit (handset line I/F unit) **45**, antenna **46**, voice codec **47**, microphone **48**, loudspeaker **49**, operation input control circuit unit **50**, scroll dial **51**, first operation button **52**, second operation button **53**, call incoming lamp **54**, and power supply unit **55**. Of these units, the handset controller **41**, LCD control circuit unit **42**, multiplexer/demultiplexer **44**, handset line interface unit **45**, voice codec **47**, operation input control circuit unit **50**, call incoming lamp **54**, and power supply unit **55** are connected to each other via a main bus **56**. Also, the multiplexer/demultiplexer **44** and voice codec **47** are connected to each other via a synchronization bus **57**.

[0053] The handset controller **41** has a CPU, ROM, RAM, and the like, and systematically controls the respective units of the handset **2** to realize operations of the handset. The handset controller **41** implements processing means for implementing various functions (to be described later) by software processing.

[0054] The LCD control circuit unit **42** controls the LCD **43** to display a text image represented by text data supplied from the handset controller **41** or multiplexer/demultiplexer **44**. The LCD **43** is a monochrome LCD, and displays a text image under the control of the LCD control circuit unit **42**.

[0055] The multiplexer/demultiplexer **44** multiplexes encoded voice data supplied from the voice codec **47** via the synchronization bus **57**, and other data supplied from the handset controller **41** via the main bus **56** by the above-mentioned multiplex scheme for the handset channel, and supplies transmission data obtained as a result of multiplexing to the handset line interface unit **45**. The multiplexer/demultiplexer **44** demultiplexes encoded voice data and other data from the transmission data supplied from the handset line interface unit **45**, and supplies these data to the voice codec **47** and handset controller **41**, respectively. The handset line interface unit **45** exchanges transmission data with the terminal main body **1** by radio via the antenna **46**.

[0056] The voice codec **47** has two operation modes, i.e., a multimedia communication mode and voice conversation mode, and operates in the mode (common to the mode setup of the voice codec **23** in the terminal main body **1**) designated by the handset controller **41** on the basis of an instruction from the main controller **11**. In the multimedia communication mode, the voice codec **47** converts a voice signal output from the microphone **48** into a digital signal, and encodes the digital signal by a predetermined low-rate voice encoding scheme (e.g., ITU-T recommendation G729) to obtain encoded voice data. The voice codec **47** supplies this encoded voice data to the multiplexer/demultiplexer **44** via the synchronization bus **57**. Also, in the multimedia communication mode, the voice codec **47** decodes a low-rate voice code in encoded voice data supplied from the multiplexer/demultiplexer **44**, and converts the decoded code into an analog signal to obtain a voice signal. The voice codec **47** supplies this voice signal to the loudspeaker **49**. By contrast, in the voice conversation mode, the voice codec **47** converts a voice signal output from the microphone **48** into a digital signal, and encodes the digital signal by 32-kbps ADPCM (ITU-T recommendation G721) to obtain encoded voice data. The voice codec **47** supplies this encoded voice data to the multiplexer/demultiplexer **44**. Also, in the voice conversation mode, the voice codec **47** decodes an ADPCM code in encoded voice data supplied from the multiplexer/demultiplexer **44**, and converts the code into an analog signal to obtain a voice signal. The voice codec **47** supplies this voice signal to the loudspeaker **49**. Note that the microphone **48** converts a voice spoken nearby into a voice signal and supplies it to the voice codec **57**. The loudspeaker **49** outputs a voice signal supplied from the voice codec **47** as a voice. In the above description, a code of the low-rate voice encoding scheme (e.g., ITU-T recommendation G.729) or ADPCM is encoded or decoded at the handset **2**. However, the present invention is not limited to such specific system, and the terminal main body **1** may exchange these schemes and PCM encoding scheme with each other, and may exchange a voice code based on the PCM encoding scheme with the handset or may exchange an analog voice signal.

[0057] The operation input control circuit unit **50** is connected with the scroll dial **51**, first operation button **52**, and second operation button **53**. The operation input control circuit unit **50** accepts user's instruction operations at these scroll dial **51**, first operation button **52** and second operation button **53**, and informs the handset controller **41** of the contents of instruction operations. The scroll dial **51** accepts a cursor movement instruction, display screen scroll instruction, and the like. The first and second operation buttons **52** and **53** accept inputs of a determination instruction and cancel instruction.

[0058] Note that the operation input control circuit unit **50** performs control operations pertaining to detection of the rotation direction and stress direction of the scroll dial **51**.

[0059] The call incoming lamp **54** is lighted under the control of the handset controller **41**, and informs the user of reception of an incoming call.

[0060] The power supply unit **55** has, e.g., a battery as a power supply, and supplies electric power to the respective units of the handset **2**. The power supply unit **55** turns power supply to the respective units on/off under the control of the handset controller **41**. However, the power supply unit **55** always supplies electric power to at least the handset controller **41** and operation input control circuit unit **50**.

[0061] **FIG. 3** is a view showing the outer appearance of the terminal main body **1** and camera unit **4**. Note that the same reference numerals denote the same parts as in **FIG. 1**.

[0062] As shown in **FIG. 3**, the terminal main body **1** has a box-shaped housing **60**, which stores the above-mentioned building elements of the terminal main body **1**.

[0063] The video LCD **14** and text LCD **16** are located so that their display surfaces are exposed outside the housing **60** from one surface of the housing **60**.

[0064] The scroll dial **31** is located on one of the four surfaces (to be referred to as housing side surfaces hereinafter) that intersect the surface (to be referred to as a housing front surface hereinafter) on which the video LCD **14** and text LCD **16** are located. The first and second operation buttons **32** and **33**, and power supply button **34** are located on a housing side surface neighboring that surface of the housing **60**, on which the scroll dial **31** is located. Note that the relative positions of the scroll dial **31**, and first and second operation buttons **32** and **33** are determined in consideration of the palm size of the hand of a human being, so that when the end portion of the housing **60** is placed on the palm of one hand, the user can operate the scroll dial **31** with the thumb of that hand, while operating the first and second operation buttons **32** and **33** with the remaining fingers.

[0065] The earphone/microphone terminal **24** is located on the same housing side surface as that on which the scroll dial **31** is located. The position of the earphone/microphone terminal **24** is determined so that the earphone/microphone **3** (not shown in **FIG. 3**) attached does not disturb operations of the scroll dial **31**.

[0066] The camera terminal **26** is located on the housing side surface on the side opposite to that on which the scroll dial **31** is located.

[0067] The camera unit **4** is constructed by coupling a camera unit main body **4***a* and support portion **4***b* via a hinge portion **4***c*, and is attached to the terminal main body **1** by inserting the support portion **4***b* into a recess portion **61**, which is formed on the same housing side surface as that of the first and second operation buttons **32** and **33**, and power supply button **34**. Furthermore, the camera unit **4** is electrically connected to the terminal main body **1** by inserting a plug connected to the distal end of a connection line (not shown) into the camera terminal **26**. As the recess portion **61**, two recess portions, i.e., a recess portion **61-1** near the housing front surface and a recess portion **61-2** near a surface (to be referred to as a housing rear surface hereinafter) opposite to the housing front surface, are formed. With this arrangement, when the support portion **4***b* is inserted into the recess portion **61-1** near the housing front surface, as shown in **FIG. 3**, the photographing direction of the camera unit **4** agrees with the housing front surface side; when the support portion **4***b* is inserted into the recess portion **61-2** near the housing rear surface with the camera unit **4** facing the side opposite to that in **FIG. 3**, the photographing direction of the camera unit **4** agrees with the housing rear surface side. Also, the camera unit main body **4***a* is pivotal about the hinge portion **4***c*, and can change its photographing angle.

[0068] **FIG. 4** is a view showing the outer appearance of the handset **2**. Note that the same reference numerals denote the same parts as in **FIG. 2**.

[0069] As shown in **FIG. 4**, the handset **2** has a box-shaped housing **70**, which stores the above-mentioned building elements of the handset **2**. Note that the housing **70** is very smaller than the housing **60** of the terminal main body **1**.

[0070] The LCD **43** is located so that its display surface exposes outside the housing **70** from one surface (to be referred to as a housing front surface hereinafter) of the housing **70**. Also, the microphone **48**, loudspeaker **49**, and first and second operation buttons **52** and **53** are located on this housing front surface.

[0071] The scroll dial **51** is located to partially project outside the housing **70** from two opposing surfaces of the four surfaces (to be referred to as housing side surfaces) that intersect the surface (to be referred to as a housing front surface hereinafter) where the LCD **43** is located. Note that the relative positions of the scroll dial **51**, and first and second operation buttons **52** and **53** are determined in consideration of the palm size of the hand of a human being, so that when the end portion of the housing **70** is placed on the palm of one hand, the user can operate the scroll dial **51** with the thumb of that hand, while operating the first and second operation buttons **52** and **53** with the remaining fingers.

[0072] The call incoming lamp **54** is located on one of the housing side surfaces, which is different from those from which the scroll dial **51** projects.

[0073] The schematic operation of the communication terminal apparatus with the above-mentioned arrangement will be explained below.

[0074] The main controller **11** waits for depression of the power supply button **34** in a power OFF state. Upon depression of the power supply button **34**, the main controller **11** controls the power supply unit **36** to start supply of electric power to the respective units, thus shifting to a power ON state.

[0075] The communication terminal apparatus of this embodiment has, as its principal operation modes, a telephone mode, videophone mode, and data communication mode. The main controller **11** immediately after the power ON state has started, as mentioned above, is set in a standby state. In the standby state, the main controller **11** controls the text LCD control circuit unit **15** to display a main menu screen for selecting one of the telephone, videophone, and data communication modes on the text LCD **16**. Also, on the main menu screen, a cursor is displayed to overlap an operation mode name (a predetermined operation mode name in an initial state) as a current selection candidate.

While such main menu screen is displayed, the main controller **11** waits for selection operation (a change and determination instruction of the selection candidate) of one of these modes. Note that the main menu screen may have a size larger than the text LCD **16**, and may change its display region upon operation of the scroll dial **31** (to be described later).

[**0076**] When the scroll dial **31** is operated in this state, the main controller **11** determines that a change instruction of the selection candidate has been issued. At this time, the main controller **11** receives information of the rotation direction and amount of the scroll dial **31** from the operation input control circuit unit **29**, changes the selection candidate in the order corresponding to the rotation direction at predetermined increments of the rotation amount, and moves the cursor to always display it overlapping the mode name of the selection candidate.

[**0077**] When the first operation button **32** is double-clicked, the main controller **11** determines that a determination instruction has been issued. At that time, the main controller **11** shifts to a processing routine of the operation mode as a current selection candidate. Note that the main controller **11** may receive the change and determination instructions of the selection candidate on the basis of inputs on the touch panel **30**.

[**0078**] The operations in the respective operation modes will be described in turn below along the processing sequence of the main controller **11**.

[**0079**] Telephone Mode

[**0080**] This operation mode allows voice conversations as a PHS terminal.

[**0081**] In this operation mode, the main controller **11** sets the operation mode of the multiplexer/demultiplexer **17** and voice codec **23** in the voice conversation mode. The main controller **11** then controls the text LCD control circuit unit **15** to display a predetermined telephone number designation method menu screen on the text LCD **16**. This telephone number designation method menu screen presents choices such as "number input mode", "telephone book search mode", and the like. The main controller **11** displays a cursor to overlap the choice as a current selection candidate. While such telephone number designation method menu screen is displayed, the main controller **11** waits for input operation of the telephone number designation method. Note that the telephone number designation method menu screen may have a size larger than the text LCD **16**, and may change its display region upon operation of the scroll dial **31** (to be described later).

[**0082**] Upon operation of the scroll dial **31** in this state, the main controller **11** determines that a change instruction of the selection candidate has been issued. At that time, the main controller **11** changes the choice of the selection candidate in the order corresponding to the rotation direction at predetermined increments of the rotation amount, and moves the cursor to always display it overlapping the choice of the selection candidate.

[**0083**] When the first operation button **32** is double-clicked, the main controller **11** determines that a determination instruction has been issued. At that time, the main controller **11** shifts to telephone number accept processing by the designation method corresponding to the choice as a current selection candidate.

[**0084**] When "number input mode" is selected, the main controller **11** controls the text LCD control circuit unit **15** to display a predetermined number input screen that presents a list of numerals (0 to 9, *, and #) on the text LCD **16**. Also, on the number input screen, a cursor is displayed to overlap a numeral as a current selection candidate. While such telephone number input screen is displayed, the main controller **11** waits for input operations of a called telephone number. Note that the telephone number input screen may have a size larger than the text LCD **16**, and may change its display region upon operation of the scroll dial **31** (to be described later).

[**0085**] Upon operation of the scroll dial **31** in this state, the main controller **11** determines that the change instruction of the selection candidate has been issued. At that time, the main controller **11** changes the numeral as a selection candidate in the order corresponding to the rotation direction at predetermined increments of the rotation amount, and moves the cursor to always display it overlapping the numeral of the selection candidate.

[**0086**] When the first operation button **32** is clicked, the main controller **11** determines that a determination instruction of the numeral of the first digit of the telephone number has been issued. Then, the main controller **11** fetches the numeral as a current selection candidate to be the lowermost digit of the numeral string designated so far.

[**0087**] When the first operation button **32** is double-clicked, the first controller **11** determines that a determination instruction of the telephone number has been issued. At that time, the main controller **11** fetches the numeral as a current selection candidate to be the lowermost digit of the numeral string designated so far, and settles the numeral string fetched so far as a called telephone number. During input operations of the telephone number, the main controller **11** controls the text LCD control circuit unit **15** to display the fetched numeral string on the text LCD **16**.

[**0088**] On the other hand, when "telephone book search mode" is selected, the main controller **11** controls the text LCD control circuit unit **15** to display a telephone book search screen on the text display **16**. Also, on the telephone book search screen, a cursor is displayed to overlap a called telephone number as a current selection candidate. While such telephone book search screen is displayed, the main controller **11** waits for selection operation of a called telephone number. Note that the telephone book search screen may have a size larger than the text LCD **16**, and may change its display region upon operation of the scroll dial **31** (to be described later).

[**0089**] Upon operation of the scroll dial **31** in this state, the main controller **11** determines that a change instruction of the selection candidate has been issued. At that time, the main controller **11** changes the selection candidate in the order corresponding to the rotation direction at predetermined increments of the rotation amount, and moves the cursor to always display it overlapping the selection candidate.

[**0090**] When the first operation button **32** is double-clicked, the main controller **11** determines that a determi-

nation instruction of the telephone number has been issued. At that time, the main controller **11** settles the telephone number as a current selection candidate to be a called telephone number.

[**0091**] Note that designation of the telephone number using the telephone book search screen can be used not only in this telephone mode but also in the videophone mode (multimedia communication mode) and data communication mode. In this case, telephone books of the individual modes are used.

[**0092**] In this embodiment, by inputting a number or using the telephone book information of the terminal main body **1**, the user can also place a call at the handset **2**. A mechanism of the handset **2** according to one characteristic feature of the present invention, which allows a number input and telephone book search, will be explained below.

[**0093**] Along with a recent size reduction of portable terminals, a layout space for keys for inputting telephone numbers cannot be assured. Also, a dial telephone number input/selection method is known, as described in a reference (Jpn. Pat. Appln. KOKAI Publication No. 8-321869). However, this method assumes only one hand (e.g., the right hand) as a hand that operates a terminal, and allows dial operations on one side. For this reason, a problem of right- or left-handedness is posed in view of ergonomics. That is, a terminal that assumes, e.g., a right-handed person is not easy for a left-handed person to operate.

[**0094**] On the other hand, the handset of this embodiment has a mechanism for allowing dial operations on the two sides of the housing. More specifically, to restate, in the handset **2**, the scroll dial **51** projects from the two side surfaces of the housing **70**, as shown in **FIG. 4**, and can be easily operated even when the user holds the housing with either the right or left hand.

[**0095**] Meanwhile, when the choice screen is scrolled in the same direction as the rotation direction of the scroll dial **51**, the change direction of choices or the like in correspondence with the finger movement of the left hand is opposite to that of the right hand, thus disturbing the user's sense of direction. In order to solve this problem, the scroll dial **51** comprises a stress direction sensor to detect the right or left hand that is making operation, and sets an opposite change direction of choices or the like corresponding to the rotation direction of the scroll dial in correspondence with the right- or left-handed operation, i.e., on the basis of the detection result.

[**0096**] More specifically, the scroll dial **51** comprises the stress direction sensor for detecting whether the user is operating on the right or left side of the dial, in addition to a rotation operation direction sensor.

[**0097**] When the stress direction sensor detects that the user is operating on the right side of the dial, and the rotation operation direction sensor directs clockwise operation, information such as a telephone number and the like displayed on the LCD display device of the handset scrolls downward; when the rotation operation direction sensor detects counterclockwise operation, the information scrolls upward.

[**0098**] On the other hand, when the stress direction sensor detects that the user is operating on the left side of the dial, and the rotation operation direction sensor detects clockwise operation, information such as a telephone number and the like displayed on the LCD display device of the handset scrolls upward; when the rotation operation direction sensor detects counterclockwise operation, the information scrolls downward.

[**0099**] The mechanism for detecting stress will be explained below with reference to **FIG. 5**.

[**0100**] As shown in **FIG. 5, a** rotation central shaft **201** of a rotary encoder **200** is movable in a one-dimensional (right or left) direction by external stress, and this shaft presses one of right and left switches **203**. The rotation central shaft **201** has elastic members such as springs, and returns to its initial position when external stress disappears.

[**0101**] To recapitulate, since the information scroll direction and dial operation direction agree with each other even when the user holds the housing with either the right or left hand, operability can be improved. Since the change direction of choices or the like is determined in correspondence with the rotation direction of the scroll dial **51**, the change directions (scroll directions) of choices or the like in correspondence with finger movements by the right and left hands agree with each other. Hence, the user does not feel disturbed.

[**0102**] Note that the right or left operation direction of the dial may be detected not only by the stress sensor but also by another sensor. Also, dials which have a 360° rotation angle and limited rotation angle (e.g., within 180°) are known, and the present invention can be applied to both these dials.

[**0103**] **FIG. 6** is a view showing another example of the arrangement of the stress direction sensor of the scroll dial **51**. In the arrangement example shown in **FIG. 6**, the operation direction of the dial **51** is detected by a skin contact sensor **401**. Note that the skin contact sensor **401** is located on one of the right and left sides of the front surface of the handset **2**. **FIG. 7** shows the detection method of the operation direction on the basis of the output (ON or OFF) from the skin contact sensor **401**.

[**0104**] FIGS. **8** to **10** are views showing an example of the arrangement of a scroll dial which rotates only a predetermined angle. In this arrangement example, electrodes e**11** and e**12** are mounted on one end of a member **300** of a dial in a radial direction, and springs **301** are connected to the another end of the dial to sandwich the center of rotation of that dial therebetween. One end of each spring **301** is connected to the member **300**, and the another end thereof is connected to the housing of the handset. Electrodes e**21** and e**22** are fixed to the housing of the handset and contact one of the electrodes e**11** and e**12** of the member **300** upon rotation of the member **300** through a predetermined angle. That is, **FIG. 9** shows a state wherein the member **300** rotates counterclockwise and the electrodes e**11** and e**21** contact each other, and **FIG. 10** shows a state wherein the member **300** rotates clockwise, and the electrodes e**12** and e**22** contact each other.

[**0105**] Hence, by electrically discriminating the contact of these electrodes, the rotation direction of the member **300**, i.e., the dial, can be detected.

[0106] Videophone Mode

[0107] In this operation mode, videos can be exchanged while making voice conversations.

[0108] In this operation mode, the main controller **11** sets the operation mode of the multiplexer/demultiplexer **17** and voice codec **23** in the voice conversation mode in an initial state. Then, the main controller **11** accepts the designated called telephone number and places a call in the same manner as in the above-mentioned telephone mode.

[0109] When a communication path is formed with a terminal (a partner terminal) of the called party via the PHS network, the main controller **11** negotiates with the partner terminal in accordance with a predetermined protocol (e.g., ITU-T recommendation H.245) to confirm if the partner terminal can perform video/voice multiplex communications, and grants execution of the video/voice multiplex communications.

[0110] If the terminal on the other hand of the line is not capable of video/voice multiplex communications or denies execution of video/voice multiplex communications, the main controller **11** shifts to the telephone mode to allow voice conversations alone.

[0111] On the other hand, if the partner terminal is capable of video/voice multiplex communications and grants execution of video/voice multiplex communications, the main controller **11** switches the operation mode of the multiplexer/demultiplexer **17** and voice codec **23** to the multimedia communication mode.

[0112] In the multimedia communication mode, encoded voice data, encoded video data, and other data output from the main controller **11** are multiplexed by the multiplexer/demultiplexer **17**. The encoded voice data is obtained by encoding a voice signal generated by the earphone/microphone **3** by the voice codec **23** in accordance with a low-rate voice encoding scheme. On the other hand, the encoded video data is obtained by encoding a video signal generated by the camera unit **4** by the video encoder **27** in accordance with MPEG4 or ITU-T recommendation H.263. The multiplexed data obtained by the multiplexer/demultiplexer **17** in this way is sent to the partner terminal as transmission data via the PHS I/F unit **18** and antenna **19**.

[0113] On the other hand, transmission data sent from the partner terminal (i.e., reception data) is demultiplexed into encoded voice data, encoded video data, and other data by the multiplexer/demultiplexer **44**. The encoded voice data is decoded into a voice signal by the voice codec **23**, and is output as a voice from the earphone/microphone **3**. The encoded video data is decoded into video data by the video decoder **12**, and a video display is made on the video LCD **14** on the basis of this video data under the control of the video LCD control circuit **13**.

[0114] In this fashion, while talking using the earphone/microphone **3**, an arbitrary video sensed by the camera unit **4** is transmitted to the partner terminal, and a video sent from the partner terminal can be observed on the video LCD **14**.

[0115] Note that the photographing direction of the camera unit **4** may agree with either the housing front surface side or housing rear surface side. Hence, by setting the photographing direction of the camera unit **4** on the housing front surface side, the user's face can be displayed on the partner terminal; by setting the photographing direction of the camera unit **4** on the housing rear surface side, a video of an object other than the user can be displayed on the partner terminal.

[0116] In this videophone mode, the main controller **11** controls the text LCD control circuit unit **15** to display a predetermined video operation menu screen on the text LCD **16**. This video operation menu screen presents choices such as "video switching", "display method switching", "display region adjustment", "local video zoom operation", "remote video zoom operation", and the like. The main controller **11** displays a cursor to overlap the choice as a current selection candidate. While such video operation menu screen is displayed, the main controller **11** waits for designation operation of execution of video operation. Note that the video operation menu screen may have a size larger than the text LCD **16**, and may change its display region upon operation of the scroll dial **31** (to be described later).

[0117] Upon operation of the scroll dial **31** in this state, the main controller **11** determines that a change instruction of the selection candidate has been issued. At that time, the main controller **31** changes the choices in the order corresponding to the rotation direction at predetermined increments of the rotation amount, and moves the cursor to always display it overlapping the choice of the selection candidate.

[0118] When the first operation button **32** is double-clicked, the main controller **11** determines that a determination instruction of video operation to be executed has been issued. At that time, the main controller **11** shifts to video operation processing corresponding to the choice as a current selection candidate.

[0119] Video Switching

[0120] When a video sent from a remote terminal (to be referred to as a remote video hereinafter) is being displayed on the video LCD **14**, upon selection of "video switching", the main controller **11** controls to display a video sensed by the camera unit **4** (to be referred to as a local video hereinafter) on the video LCD **14**. That is, the main controller controls the video decoder **12** to decode encoded video data output from the video encoder **27**.

[0121] Also, when a local video is being displayed on the video LCD **14** upon selection of "video switching", the main controller **11** controls to display a remote video on the video LCD **14**. That is, the main controller controls the video decoder **12** to decode encoded video data output from the multiplexer/demultiplexer **17**.

[0122] Display Method Switching

[0123] When "reduced-size display" mentioned above is being made upon selection of "display method switching", the main controller **11** switches it to "equal-size display"; when "equal-size display" mentioned above is being made upon selection of "display method switching", the main controller **11** switches it to "reduced-size display".

[0124] Display Region Adjustment

[0125] When a remote video is displayed by "equal-size display" or when a partial display is made by zoom display (to be described later), the main controller **11** enables selection of "display region adjustment". Upon selection of

"display region adjustment", the main controller **11** waits for a movement instruction of the display region.

[**0126**] Upon operation of the scroll dial **31** in this state, the main controller **11** determines that a change instruction of the selection candidate has been issued. At this time, the main controller **11** changes the choice of the selection candidate in the order corresponding to the rotation direction at predetermined increments of the rotation amount, and moves the cursor to always display it overlapping the choice of the selection candidate.

[**0127**] When the first operation button **32** is double-clicked, the main controller **11** determines that a determination instruction of video operation to be executed has been issued. The main controller **11** shifts to video operation processing corresponding to the choice as a current selection candidate.

[**0128**] When the scroll dial **31** is operated while a remote video is being displayed by "equal-size display", the main controller **11** determines that a movement instruction of the display region has been issued. At this time, the main controller **11** changes the display region by a moving amount corresponding to the rotation amount of the scroll dial in a direction concordant with the rotation direction of the scroll dial **31**. The direction to change the display region is the vertical direction when the local terminal is placed in a landscape state and a video is cut in the vertical direction, as indicated by **I55** in **FIG. 24**, or is the horizontal direction when the local terminal is placed in a portrait state and a video is cut in the horizontal direction, as indicated by **I65** in **FIG. 25**.

[**0129**] When the scroll dial **31** is operated without pressing the first operation button **32** while making a partial display by zoom display, the main controller **11** determines that a movement instruction of the display region in the horizontal direction has been issued. At this time, the main controller **11** changes the display region by the moving amount corresponding to the rotation amount of the scroll dial **31** in the movement direction (rightward or leftward) concordant with the rotation direction of the scroll dial **31**. On the other hand, when the scroll dial **31** is operated with the first operation button **32** pressed while making a partial display by zoom display, the main controller **11** determines that a movement instruction of the display region in the vertical direction has been issued. At this time, the main controller **11** changes the display region by the moving amount corresponding to the rotation amount of the scroll dial **31** in the movement direction (upward or downward) concordant with the rotation direction of the scroll dial **31**.

[**0130**] Local Video Zoom Operation

[**0131**] The main controller **11** enables selection of "local video zoom operation" while a local video is being displayed. Upon selection of "local video zoom operation", the main controller **11** waits for zoom operation.

[**0132**] Upon operation of the scroll dial **31** in this state, the main controller **11** determines that zoom operation has been done. At this time, the main controller **11** zooms a local video displayed on the video LCD **14** at a ratio corresponding to the rotation amount of the scroll dial **31**. Note that the main controller **11** determines enlargement/reduction in correspondence with the rotation direction of the scroll dial **31**.

[**0133**] Note that zoom processing of a local video is implemented by performing data processing of video data output from the camera unit **4** by, e.g., the camera interface unit **25**.

[**0134**] Remote Video Zoom Operation

[**0135**] The main controller **11** enables selection of "remote video zoom operation" while a remote vide is being displayed. Upon selection of "remote video zoom operation", the main controller **11** waits for zoom operation.

[**0136**] Upon operation of the scroll dial **31** in this state, the main controller **11** determines that zoom operation has been done. At this time, the main controller **11** determines the zoom ratio from the rotation amount of the scroll dial **31** and enlargement/reduction from the rotation direction of the scroll dial **31**, generates a zoom request that indicates them, multiplexes the request in transmission data as other data, and informs the remote terminal of it.

[**0137**] Upon reception of such zoom request from the remote terminal, the main controller **11** performs zoom processing indicated by the zoom request, and sends a zoomed video to the remote terminal.

[**0138**] Note that zoom processing of a video is implemented by performing data processing of video data output from the camera unit **4** by, e.g., the camera interface unit **25**.

[**0139**] As described above, according to this embodiment, a communication terminal apparatus which is very easy to operate even when it is operated while being held with a hand, and can be satisfactorily used in various situations, can be provided.

[**0140**] Second Embodiment

[**0141**] The second embodiment relates to a communication terminal system constructed by combining a video/voice communication terminal and voice communication terminal.

[**0142**] A communication terminal system of this embodiment is constructed by combining a video/voice communication terminal (corresponding to the terminal main body **1** of the first embodiment) and a voice communication terminal (corresponding to the handset **2** of the first embodiment), and further has the following features.

[**0143**] (1) Communication Type Information:

[**0144**] Communication type information indicating one of a voice communication, a multimedia communication complying with ITU-T recommendation H.324 or its modification (to be referred to as an "H.324 equivalent multimedia communication" hereinafter), and data communication is appended to a call control message (call setup, response, response acknowledgement) upon connecting a channel in a non-limited digital communication mode.

[**0145**] (2) Transmission of Communication Type Information:

[**0146**] The communication type information itself is identified by a subaddress or called number contained in the call control message or is transmitted using an inter-user information message.

[0147] (3) Response **1** by Voice Communication Terminal:

[0148] Upon reception of an H.324 equivalent multimedia communication call setup request using the non-limited digital communication mode from an originating terminal, when a terminal having only a voice communication function is to respond, it informs the originating terminal that it can respond by a voice communication based on the voice encoding scheme (ADPCM in case of a PHS) in the voice communication mode in place of the H.324 equivalent multimedia communication, thus allowing voice communications with the originating terminal in accordance with this scheme.

[0149] (4) Shift to Multimedia Communication:

[0150] Using a tone signal during voice communications based on above-mentioned ADPCM, the communication mode with the partner terminal can be switched to an H.324 equivalent multimedia communication mode.

[0151] (5) Denial of Voice Communication:

[0152] When the originating terminal denies a response based on the voice encoding scheme (ADPCM encoding scheme) in the voice communication mode of the terminating terminal, a negotiation for the H.324 equivalent multimedia communication is made, and a connection for voice communications is established prior to video or data communications.

[0153] (6) Response **2** by Voice Communication Terminal:

[0154] Upon reception of an H.324 equivalent multimedia communication call setup request using the non-limited digital communication mode from an originating terminal, when a terminal having only a voice communication function is to respond, it establishes a connection for voice communications prior to video or data communications in a negotiation for the H.324 equivalent multimedia communications.

[0155] (7) Data Communication:

[0156] In case of data communications, automatic termination is set, and a communication application of a host computer processes data exchange. When user's operation is requested, a corresponding message is sent.

[0157] **FIG. 11** is a flow chart showing an example of the main routine of the communication terminal system according to this embodiment upon reception of an incoming call.

[0158] In step MR**1**, the control waits for a call setup request sent from the calling party. Upon reception of the call setup request, it is checked if that request is in a voice mode, as shown in step MR**2**. When voice communications in the voice mode are to be made, the flow advances to step MR**5** to execute voice communication processing. Upon completion of the voice communication processing in the voice mode, line disconnection processing is executed (step MR**8**), and the flow returns to step MR**1** to wait for a call setup request.

[0159] If it is determined in step MR**2** that the received request is not a call setup request in the voice mode, 3.1-kHz audio communication processing (step MR**6**) is executed depending on the discrimination result in step MR**3** or non-limited digital communications (step MR**7**) are made depending on the discrimination result in step MR**4**. Note that the 3.1-kHz audio communication processing includes communication processing using a G**3** facsimile or data modem, and the non-limited digital communication processing includes processing pertaining to a videophone, G**4** facsimile communications, or data communications. After the 3.1-kHz audio communication processing or non-limited digital communications, the flow advances to step MR**8** to execute line disconnection processing.

[0160] A video/voice communication terminal (corresponding to the terminal main body **1** of the first embodiment) such as a videophone terminal inevitably has a large size since it comprises a video display device and video input device.

[0161] When a handset having a voice conversation function alone is used, a call for multimedia communications using video and voice data cannot be received. Upon reception of an incoming call from another terminal, a handset terminal receives information indicating that it is capable of voice conversation alone, and temporarily responds (goes off-hook) to make voice conversation in case of voice conversations or multimedia communications, and a main body terminal is operated as needed, thus allowing the main body terminal to switch between the voice conversations and multimedia conversations. In case of data communications, a portion of received data, e.g., a sender address in case of an e-mail, or the entire received data is sent to the handset to display the received data. Some sequences of switching control upon reception of an incoming call according to such characteristic features of this embodiment will be explained below. **FIG. 12** shows an example of such sequences.

[0162] In this sequence, an originating terminal places a call by setting the non-limited digital mode as transmission performance in its call setup message, and appending call type information indicating a multimedia communication complying with H.324 or equivalence to a predetermined field of an inter-user information message that can be contained in the call setup message. Note that the present invention is not limited to this embodiment that transmits communication type information using inter-user information. For example, communication type information may be transmitted and identified using transmission performance, subaddress, called number, and calling number.

[0163] Upon reception of the call setup message from the originating terminal, the terminal main body of the terminating terminal recognizes the message, transmits a call setup accept message and calling message to the originating terminal, and rings its own ringer to issue a call reception message to the handset to inform the user of an incoming call. Note that vibrations of a vibrator, flickering of a light-emitting diode or the like, and so forth may be used in place of ringing of the ringer.

[0164] Upon reception of the call reception message, the handset rings its own ringer, and informs the terminal main body of call reception message acknowledgement. Note that vibrations of a vibrator, flickering of a light-emitting diode or the like, and so forth may be used in place of ringing of the ringer as in the terminal main body.

[0165] When the operator responds for voice communications by lifting the handset to go off-hook, the handset issues to the terminal main body a handset response for informing the terminal main body that the handset itself has responded to the call.

[0166] Upon reception of the handset response from the handset, the terminal main body sends a handset response acknowledgement that informs the handset of reception of the response from the handset. Also, the terminal main body sets the non-limited digital mode as transmission performance, appends communication type information indicating that a response based on the voice encoding scheme (e.g., ADPCM in a PHS) for the voice mode can be made to a field of an inter-user information message that can be contained in a response message, and sends the response message to the originating terminal.

[0167] Upon reception of the response message indicating the non-limited digital communication mode and that the response based on the voice encoding scheme for the voice mode can be made, the originating terminal checks if the own terminal can make equivalent communications, appends communication type information indicating that checking result to a field of an inter-user information message that can be contained in a response acknowledgement message, and sends the response acknowledgement message to the terminating terminal.

[0168] When communications based on the voice encoding scheme for the voice mode in the non-limited digital communication mode are enabled, voice communications according to the voice encoding scheme for the voice mode are made between the originating and terminating terminals in the non-limited digital communication mode.

[0169] On the other hand, when communications based on the voice encoding scheme for the voice mode in the non-limited digital communication mode are disabled, a negotiation for multimedia communications complying with H.324 as ITU-T standard or its equivalent is started, and a connection for voice communications is established prior to other kinds of information, thus quickly starting voice communications.

[0170] During voice communications, the terminating terminal sends a mode switching request using a dial tone signal. Upon recognition of the mode switching request, the originating terminal sends a mode switching response signal to the terminating terminal using a dial tone signal. Note that such signals are not limited to dial tone signals, and may use a combination of frequencies, a combination of phases, a modulated specific code, repetition of a modulated specific code, and the like. On the other hand, when the originating terminal has already detected that the terminating terminal is capable of multimedia communications, the originating terminal may issue a mode switching request. Upon switching, mode switching may be done by performing mode switching operations at the individual terminals after the operators of the originating and terminating terminals agree with each other by voice communications. Alternatively, after mode switching operation, a state for exchanging signals such as dial tone signals or the like may be set.

[0171] After mode switching is enabled, a negotiation containing connection setup for multimedia communications complying with H.324 equivalent is made, and a connection for a voice, moving image, still image, data communications, or the like is set, thus starting multimedia communications. In this case, a connection for a voice may be established prior to other kinds of information to quickly start voice communications, and after that, connections for other kinds of information may be established.

[0172] Also, voice communications according to the voice encoding scheme for the voice mode may be restored upon the multimedia communications. In such case, a negotiation for mode switching need only be made using a control channel for establishing a connection for multimedia communications.

[0173] In the sequence on the terminating terminal side, video/voice communications are made by the terminal main body, and voice communications are made by the handset. However, naturally voice communications by the terminal main body can also be made. In such case, the user operates the terminal main body to inform the handset of a terminal switching request, and upon recognition of that request, the handset informs the terminal main body of a terminal switching response and ends voice communications. Upon recognition of the terminal switching response, the terminal main body enables voice communications by itself. In this case, the terminals may be switched by operating on the handset side. Also, voice communications at the terminal main body are not limited to voice conversations using the earphone/microphone, but may be the ones by means of a voice via a loudspeaker.

[0174] When the terminal main body of the terminating terminal goes on-hook, a negotiation for ending multimedia communications is started. Upon completion of the negotiation, a disconnection message, release message, release message, and the like are exchanged between the originating and terminating terminals, thus disconnecting the line. Note that on-hook operation may be performed at the handset or the originating terminal.

[0175] When it is determined in the call setup message that a multimedia communication is to be performed, even when a response is made via voice communications at the handset, a negotiation for multimedia communications complying with H.324 equivalent may be started to establish a connection for voice communications prior to other kinds of information, thus quickly starting voice communications.

[0176] This sequence relates to the terminating terminal which is separated into the terminal main body and handset. However, the arrangement of the terminating terminal is not limited to such specific one. For example, the terminating terminal may be an integrated arrangement or may be separated into three or more portions.

[0177] FIGS. **13** to **17** show other sequence examples. The sequences shown in FIGS. **13** to **17** have different orders and contents of messages exchanged between the originating and terminating terminals from the sequence shown in **FIG. 12**, and the features of the individual sequences will be briefly explained below.

[0178] In the sequence shown in **FIG. 13**, the user goes off-hook at the terminal main body. The sequence after the user goes off-hook is substantially the same as that in **FIG. 12**.

[0179] In the sequence shown in **FIG. 14**, the user goes off-hook at the handset, and mode switching from voice communications to H.324 video/voice communications and terminal switching from the handset to the terminal main body are simultaneously done.

[0180] The sequence shown in **FIG. 15** is executed when the terminal main body of the called party issues a response

indicating the voice encoding scheme (ADPCM) for the voice mode in the non-limited digital communication mode to the originating terminal, and the originating terminal denies it. In this case, a non-limited digital H.324 voice communication is set in a response acknowledgement message to be issued from the originating terminal to the terminating terminal.

[0181] In the sequence shown in **FIG. 16**, the originating terminal places a call while setting an ADPCM voice communication in a call setup message, and the user goes off-hook at the handset in response to that call. In this sequence, no video/voice communications complying with H.324 are made unlike the sequences described above.

[0182] The sequence shown in **FIG. 17** is substantially the same as that shown in **FIG. 16**, except that the user goes off-hook at the terminal main body in place of the handset, and after voice communications at the terminal main body, terminal switching from the terminal main body to the handset is done.

[0183] Another hardware arrangement of this embodiment will be explained below.

[0184] **FIGS. 18 and 20** are block diagrams showing another hardware arrangement, and **FIG. 19** is a view showing the outer appearance thereof.

[0185] In the arrangement shown in FIGS. **1** to **4**, the terminal main body **1** is a "master", and the handset **2** is a "slave". On the other hand, the arrangement shown in FIGS. **18** to **20** is characterized in that the handset **2** (to be referred to as a "voice communication terminal" hereinafter) is a "master", and the terminal main body **1** (to be referred to as a "video/voice communication terminal" hereinafter) is a "slave.

[0186] **FIG. 18** shows the hardware arrangement of the voice communication terminal, which additionally comprises a PHS line I/F, antenna connected thereto, and multiplexer/demultiplexer, which are arranged in the terminal main body **1** shown in **FIG. 1**. On the other hand, **FIG. 20** shows the hardware arrangement of the video/voice communication terminal, which does not comprise any PHS line I/F, antenna connected thereto, and multiplexer/demultiplexer.

[0187] FIGS. **21** to **23** are charts showing the sequences executed by the other hardware arrangement.

[0188] In the sequence shown in **FIG. 21**, the user goes off-hook and makes voice conversations at the voice communication terminal. After that, the user switches the mode at the voice communication terminal, and a mode switching request using a tone signal is transmitted to an originating terminal. In response to this request, voice communications complying with H.324 are made after a negotiation based on H.324 described above. Then, terminal switching is done, and the user makes video/voice communications complying with H.324 at the video/voice communication terminal. Note that communication data to be sent from the originating terminal in H.324 voice communications at the voice communication terminal contain not only voice but also video data.

[0189] In the sequence shown in **FIG. 22**, the user goes off-hook at the video/voice communication terminal in place of the voice communication terminal, and makes non-limited digital voice communications (ADPCM). After that, mode switching operation is transmitted to the originating terminal via the voice communication terminal. After an H.324 negotiation, video/voice communications complying with H.324 are made at the video/voice communication terminal.

[0190] In the sequence shown in **FIG. 23**, the user goes off-hook at the video/voice communication terminal, and makes non-limited digital voice communications (ADPCM). After that, terminal switching is done, and similar voice communications are made at the voice communication terminal.

[0191] According to the second embodiment mentioned above, switching control such as mode switching, terminal switching at the call reception side, and the like are appropriately done in accordance with the above-mentioned sequences upon reception of an incoming call. In this way, a high-performance communication terminal system with high portability and operability can be provided.

[0192] Third Embodiment

[0193] The third embodiment relates to a communication terminal apparatus which attains matching of video display directions. The hardware arrangement of this embodiment is the same as that of the first embodiment described above, and a detailed description thereof will be omitted.

[0194] In a portable communication terminal apparatus, the terminal holding direction by the user is uncertain at both the video transmitter and receiver sides. For this reason, when the holding directions of the transmitter/receiver sides do not agree with each other, images displayed on their terminals may be horizontally or vertically inverted. For this reason, a conventional portable communication terminal apparatus requires the terminal holding directions of the transmitter and receiver sides agree with each other.

[0195] Hence, the communication terminal apparatus of this embodiment comprises means for detecting the holding state of the terminal, exchanging each others' detected holding states between the two terminals, and processing a display image to match the video display directions when it is determined based on the comparison result of the exchanged holding state information that two terminal directions conflict with each other.

[0196] Video display direction matching control corresponding to the holding states of the partner terminal and the own terminal will be described in detail below.

[0197] The terminal main body **1** can be used not only in the state shown in **FIG. 3** (to be referred to as a landscape state hereinafter) but also in a state rotated 90° from the state shown in **FIG. 3** (to be referred to as a portrait state hereinafter). When the terminal main body **1** is in the landscape state, the display surface of the video LCD **14** and the video sensed by the camera unit **4** are both in the landscape state. On the other hand, when the terminal main body **1** is in the portrait state, the display surface of the video LCD **14** and the video sensed by the camera unit **4** are both in the portrait state. Whether the terminal main body **1** is in the landscape or portrait state is detected by the terminal direction sensor unit **35**.

[0198] The terminal direction sensor unit **35** has two mercury relays set at the right and left lower end portions of the terminal main body **1**. Each of these mercury relays is formed by sealing a small amount of mercury in a thin tube, and placing a pair of contacts at one end in the tube. When the mercury moves to the contact side by gravity, it short-circuits the contacts, thus electrically connecting the two

contacts. That is, by monitoring the ON-OFF states of the two mercury relays, the holding direction of the terminal main body **1** can be determined.

[**0199**] In an initial negotiation, the main controller **11** informs the partner terminal of the direction of the terminal main body **1**. Also, when the terminal direction sensor unit **35** detects that the direction of the terminal main body has changed during communications, the main controller **11** multiplexes information indicating that on transmission data as other data, and informs the partner terminal of it.

[**0200**] The partner terminal is also comprised of the same apparatus, and upon reception of the direction of the partner terminal, the main controller **11** compares information indicating the direction of the partner terminal (to be referred to as a remote terminal hereinafter) and information indicating the direction of the own terminal (to be referred to as a local terminal hereinafter), and processes a display image on the video LCD **14** as follows in correspondence with the comparison result.

[**0201**] When Local Terminal is in Landscape State

[**0202**] When the remote terminal is also in the landscape state, and a video in the state indicated by **I51** in **FIG. 24** is received, the main controller **11** controls the video LCD control circuit unit **13** to directly display the received video on the video LCD **14**, as indicated by **I52** in **FIG. 24**.

[**0203**] By contrast, when the remote terminal is in the portrait state, and a video in the state indicated by **I53** in **FIG. 24** is received, the main controller **11** uses one of two display methods, i.e., "reduced-size display" and "equal-size display" as follows in correspondence with the user's selection (acceptance of selection will be explained later).

[**0204**] **I51** and **I53** have different screen directions to show images, but their video data are generated by raster scan in the same direction (for example, in case of **I51**, a direction from the left to the right; in case of **I53**, a direction from the top to the bottom). For this reason, in order to display a video in the state indicated by **I53** on the landscape screen, it must be rotated 90°. Hence, the main controller **11** performs 90° rotation in either the display method "reduced-size display" or "equal-size display".

[**0205**] When "reduced-size display" is selected, the main controller **11** controls the video LCD control circuit unit **13** to reduce the entire region of the received video to a size that can be displayed on the landscape screen, and to display the reduced video as that in the state indicated by **I54** on the video LCD **14**.

[**0206**] On the other hand, when "equal-size display" is selected, the main controller **11** controls the video LCD control circuit unit **13** to extract a portion (a central portion in a standard state) of a size that can be displayed on the landscape screen from the received video, and to display the extracted video as that in the state indicated by **I55** on the video LCD **14**.

[**0207**] When Local Terminal is in Portrait State

[**0208**] When the remote terminal is also in the portrait state, and a video in the state indicated by **I61** in **FIG. 25** is received, the main controller **11** controls the video LCD control circuit unit **13** to directly display the received video on the video LCD **14** in the state indicated by **I63** in **FIG. 25**.

[**0209**] By contrast, when the remote terminal is in the landscape state, and a video in the state indicated by **I63** in **FIG. 25** is received, the main controller **11** uses one of two display methods, i.e., "reduced-size display" and "equal-size display" as follows in correspondence with the user's selection (accept of selection will be explained later).

[**0210**] In **FIG. 25**, **I61** and **I63** have different screen directions to show images, but their video data are generated by raster scan in the same direction (for example, in case of **I61**, a direction from the top to the bottom; in case of **I63**, a direction from the left to the right). For this reason, in order to display a video in the state indicated by **I63** on the portrait screen, it must be rotated 90°. Hence, the main controller **11** performs 90° rotation in either the display method "reduced-size display" or "equal-size display".

[**0211**] When "reduced-size display" is selected, the main controller **11** controls the video LCD control circuit unit **13** to reduce the entire region of the received video to a size that can be displayed on the portrait screen, and to display the reduced video as that in the state indicated by **I64** on the video LCD **14**.

[**0212**] On the other hand, when "equal-size display" is selected, the main controller **11** controls the video LCD control circuit unit **13** to extract a portion (a central portion in a standard state) of a size that can be displayed on the portrait screen from the received video, and to display the extracted video as that in the state indicated by **I65** on the video LCD **14**.

[**0213**] In this fashion, by processing a video, appropriate display can be made independently of the landscape or portrait state of the local terminal.

[**0214**] Upon processing a video, an image must be processed in consideration of not only the aspect ratio of the image but also "erection" of the image.

[**0215**] On the other hand, only one terminal holding state may be variable in some cases. In such case, as described above, a video may be processed not by the receiving terminal but by a transmitting terminal. The holding state of the receiving terminal is transmitted to the transmitting terminal, and the transmitting terminal processes a video to be processed on the basis of the holding state of the receiving terminal and then transmits the processed video to the receiving terminal.

[**0216**] To restate, according to the third embodiment, since the holding state of the terminal is detected, the two terminals exchange each others' detected holding states, and a display image is processed to match the video display directions when it is determined based on the comparison result of the exchanged holding state information that two terminal directions conflict with each other, even when the terminal holding directions by the users do not agree with each other at the transmitter/receiver sides, images displayed on the two terminals can be prevented from being horizontally or vertically inverted.

[**0217**] The above explanation has been given under the condition that the holding states of the two terminals are uncertain. However, the present invention is not limited to such specific condition. For example, when the holding state of one terminal is fixed and that of the other terminal is uncertain, and the holding states conflict with each other

between the terminal with an indefinite holding state and that with the fixed holding state, display images may be processed to match the video display directions. In the above description, only a video (moving image) has been explained. However, a video is not limited to a moving image but may be a still image. In addition, in place of processing a display image, the display device or camera may have a rotatable arrangement, and when conflict of the holding state has occurred, the display screen of the display device may be mechanically rotated to remove such conflict.

[0218] In the above description, the holding state of the terminal is detected using mercury switches. However, the present invention is not limited to such specific switches. For example, a holding direction indication means comprised of, e.g., a specific operation button, touch panel, or the like for detecting some operation at the terminal may be added, and the terminal holding direction may be detected upon operation of this means by the user.

[0219] In addition, appropriate modifications may be made without departing from the scope of the present invention.

Industrial Applicability

[0220] According to the present invention, a communication terminal apparatus which is very easy to operate even when it is operated while being held with a hand, can be satisfactorily used in various situations, and has high portability and storability, can be provided.

1. A communication terminal system in which one communication terminal is constructed by at least first and second housings, characterized in that

said first housing comprises radio communication means for making a communication with another communication terminal by radio, and first communication means for making a communication with a housing other than said first housing,

said second housing comprises second communication means for making a communication with a housing other than said second housing, and

said first housing can make a video communication including at least a moving image and/or still image with another communication terminal, said second housing can make at least a voice communication with said other communication terminal, or said first housing can make at least a voice communication with another communication terminal, and said second housing can make a video communication including at least the moving image and/or still image with another terminal.

2. A communication terminal system according to claim 1, wherein said first and second communication means comprise radio communication means.

3. A communication terminal system according to claim 1 or 2, further comprising:

communication type information communication means for communicating communication type information used for identifying at least a voice communication and a multimedia communication including a communication of a voice, moving image, still image, or data between originating and terminating communication terminals; and

detection means for detecting the voice or multimedia communication on the basis of the communication type information received from the originating terminal via said communication type information communication means.

4. A communication terminal system according to claim 3, wherein said communication type information communication means comprises means for communicating the communication terminal information using at least one field of transmission performance, subaddress, called number, calling number, and inter-user information message contained in a call control message pertaining to call control.

5. A communication terminal system which comprises at least radio communication means for connecting another terminal, image communication means for communicating a moving image or still image, and voice communication means, comprising:

communication type information communication means for communicating communication type information used for identifying at least a voice communication and a multimedia communication including a communication of a voice, moving image, still image, or data between originating and terminating communication terminals; and

detection means for detecting the voice or multimedia communication on the basis of the communication type information received from the originating terminal via said communication type information communication means.

6. A communication terminal system according to claim 3, 4, or 5, further comprising:

means for performing response operation based on only a voice communication when the communication type information sent from the originating terminal that issued a communication request indicates a multimedia communication; and

means for informing using the communication type information the originating terminal of a message indicating that a voice communication according to a voice encoding scheme for a voice mode can be made in a non-limited digital communication mode.

7. A communication terminal system according to claim 6, further comprising:

means for, when the message indicating that response operation by the voice communication using a communication encoding scheme for the voice mode can be made in the non-limited digital communication mode is received from the call receiving terminal, communicating using the communication type information whether or not the voice communication using the voice encoding scheme for the voice mode in the non-limited digital communication mode is granted;

means for granting a communication by the voice communication using the voice encoding scheme for the voice mode in the non-limited digital communication mode, and making the voice communication with the call receiving terminal; and

means, upon being granted by the originating terminal for the communication by the voice communication using the voice encoding scheme for the voice mode in the non-limited digital communication mode, for making the voice communication with the originating terminal.

8. A communication terminal system according to claim 7, further comprising means for, when the communication by the voice communication using the voice encoding scheme for the voice mode in the non-limited digital communication mode is not granted, establishing a connection for a voice communication prior to a communication of other kinds of information in a negotiation for establishing a connection for a multimedia communication.

9. A communication terminal system according to claim 6, further comprising:

means for informing the originating terminal of shift to a multimedia communication using a predetermined switching signal during a voice communication using the voice encoding scheme for the voice mode in the non-limited digital communication mode; and

means for establishing a connection for the multimedia communication.

10. A communication terminal system according to claim 9, wherein the switching signal is a signal indicating one of a combination of frequencies, a combination of phases, a modulated specific code, and repetition of the modulated specific code.

11. A communication terminal system according to claim 9, wherein the switching signal is a signal indicating operation at the terminal after operators of the originating and terminating terminals agree with each other by a voice.

12. A communication terminal system according to claim 5, further comprising:

means for performing response operation by only a voice communication when the communication type signal sent from the originating terminal indicates a multimedia communication; and

means for establishing a connection for the voice communication prior to a communication of other kinds of information in a negotiation for establishing a connection for the multimedia communication, after the response operation by only the voice communication is done.

13. A communication terminal system according to claims **7** and **12**, wherein a housing that performs the response operation by only the voice communication is a housing comprising at least said voice communication means.

14. A communication terminal apparatus comprising:

display means for displaying information;

scroll direction input means for inputting a scroll direction of information to be displayed on said display means;

operation direction detection means for detecting an operation direction of said screen scroll direction input means; and

display control means for, when the operation direction is a first operation direction and the information scroll direction is a first screen scroll direction, making a display in a first order,

when the operation direction is the first operation direction and the information scroll direction is a second screen scroll direction, making a display in a second order,

when the operation direction is a second operation direction and the information scroll direction is the first screen scroll direction, making a display in the first order, and

when the operation direction is the second operation direction and the information scroll direction is the second screen scroll direction, making a display in the second order.

15. A communication terminal apparatus according to claim 14, wherein said information scroll direction input means comprises dial means which is rotated clockwise or counterclockwise.

16. A communication terminal apparatus according to claim 15, wherein said dial means is substantially continuously rotatable.

17. A communication terminal apparatus according to claim 15, wherein said dial means is rotatable through only a predetermined angle.

18. A communication terminal apparatus according to claim 14, wherein said operation direction detection means comprises means for detecting a direction of stress acting upon operation of said information scroll direction input means.

19. A communication terminal apparatus according to claim 14, wherein said operation direction detection means includes sensor means for detecting contact of a skin of an operator.

20. A communication terminal apparatus comprising:

display means for displaying information; and

information scroll direction input means for inputting a scroll direction of information to be displayed on said display means, said information scroll direction input means comprising an operation portion which is operable from at least two directions, and upon operation of one portion of said operation portion, the other portion being integrally operated substantially simultaneously in correspondence with the operation.

21. A communication terminal apparatus according to claim 20, wherein said information scroll direction input means comprises dial means which is rotated clockwise or counterclockwise.

22. A communication terminal apparatus according to claim 21, wherein said dial means is substantially continuously rotatable.

23. A communication terminal apparatus according to claim 21, wherein said dial means is rotatable through only a predetermined angle.

24. A video communication system constructed by interconnecting a video transmission terminal having at least one video input means and video transmission means, and a video reception terminal having at least one video display means and video reception means via a radio communication network or wired communication network, comprising:

terminal holding direction detection means for detecting holding directions of both said video transmission terminal and video reception terminal;

sending means for sending information indicating the holding direction of said video transmission terminal detected by said terminal holding direction detection means to said video reception terminal;

comparison means for comparing the holding direction information of said video transmission terminal sent by said sending means, and the holding direction information of said video reception terminal; and

processing means for processing a video transmitted from said video transmission means of said video transmission terminal and received by said video reception means of said video reception terminal in accordance with a comparison result of said comparison means.

25. A video communication system constructed by interconnecting a video transmission terminal having at least one video input means and video transmission means, and a video reception terminal having at least one video display means and video reception means via a radio communication network or wired communication network, comprising:

terminal holding direction detection means for detecting a holding direction of said video reception terminal;

sending means for sending information indicating the holding direction of said video reception terminal detected by said terminal holding direction detection means to said video transmission terminal; and

processing means for processing a video to be transmitted by said video transmission means on the basis of the holding direction information of said video transmission terminal sent from said sending means.

26. A video communication system according to claim 24 or 25, wherein a terminal holding direction of one of said video transmission terminal and said video reception terminal is substantially fixed.

27. A video communication system according to claim 24, 25, or **26**, wherein said terminal holding direction detection means comprises a pair of mercury switches.

* * * * *