(12) UK Patent Application (19) GB (11) 2 270 045 (13) A

(43) Date of A Publication 02.03.1994

(21) Application No 9316314.5

(22) Date of Filing 06.08.1993

(30) Priority Data
(31) 04231798 (32) 31.08.1992 (33) JP

(51) INT CL[5]
B60R 21/20

(52) UK CL (Edition M)
B7B BSB

(56) Documents Cited
GB 2251222 A GB 2250483 A GB 2237247 A
GB 1531069 A US 5085463 A US 5121941 A
TRW Note column 5 lines 61-66

(58) Field of Search
UK CL (Edition L) B7B BSB
INT CL[5] B60R 21/16 21/20
Online databases: EDOC,WPIL

(71) Applicant(s)
Takata Corporation

(Incorporated in Japan)

4-30 Roppongi 1-chome, Minato-ku, Tokyo 16, Japan

(72) Inventor(s)
Masato Kuretake
Kazuhiko Yamakawa
Motonobu Kitagawa
Sawayo Uda
Yoshimi Yoshida
Takayasu Zushi

(74) Agent and/or Address for Service
Dibb Lupton Broomhead
Carlton House, 18 Albert Square, MANCHESTER,
M2 5PG, United Kingdom

(54) Vehicle air bag assembly

(57) The retainer 12 is made of a synthetic resin, and synthetic resin is secured to the inflator opening 32 of the air bag 14 to produce an annular body 34 which is then welded or bonded to the retainer 12. In an alternative construction, an annular synthetic resin body (52) at the periphery of an air bag (46) is secured to the mouth of a synthetic resin container (42) housing the air bag and a gas generator (44) (Fig 2). These constructions are light in weight and resist rusting.

FIG.1

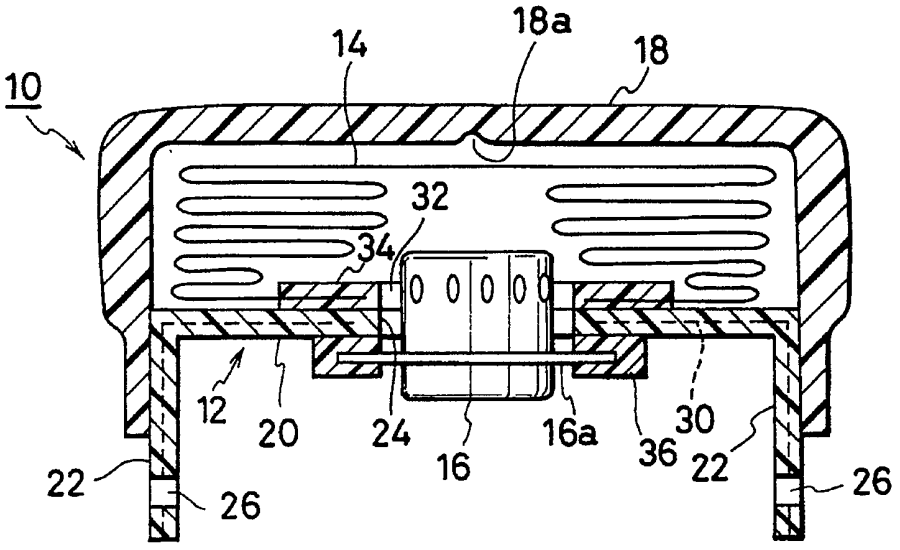

GB 2 270 045 A

FIG.1

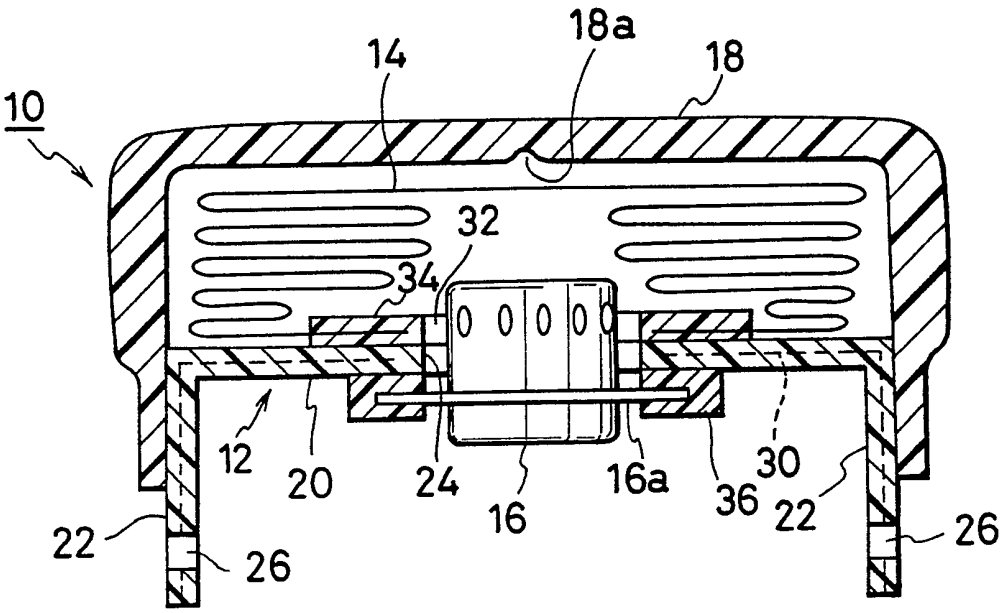

FIG.2

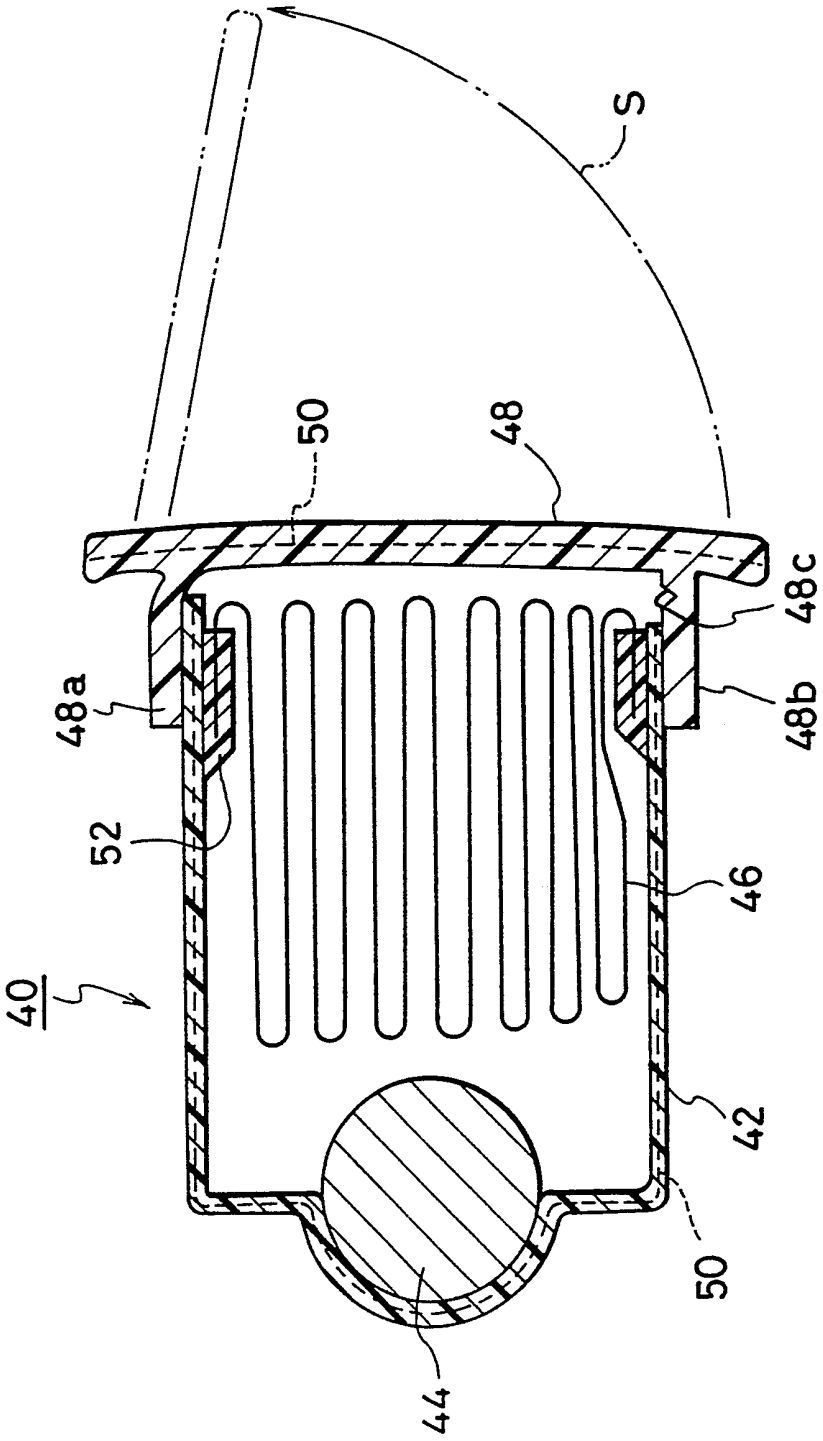

AIR BAG DEVICE

Field of the Invention

The present invention concerns an air bag device for use in a driver's seat and an air bag device for use in a passenger's seat and, more in particular, it relates to an air bag device in which a retainer or a container is made of a synthetic resin intended for reduced weight and increased strength.

Description of the Related Art

An air bag device for use in a driver's seat has such a constitution that an air bag and an inflator (gas generator) for extending the air bag are mounted to a mounting bed referred to as a retainer, and the air bag is covered with a module cover. A usual module cover has a box-shaped configuration opened at the bottom and is secured at lower edges thereof to the retainer.

When the inflator is actuated to generate a gas, by which the air bag is extended, an extremely large stress is applied to the retainer. In order to withstand the large stress, the retainer has been made of metal such as iron.

An air bag device for use in a passenger's seat has such a constitution that an air bag and an inflator are

mounted to a container in a vessel-like shape opened at the front, the air bag is folded and contained in the container and the front opening of the container is covered with a lid. Since an extremely large stress is applied to the container when the air bag is extended, the container is made of metal such as iron so as to withstand the stress.

Since the retainer or the container made of iron has a large weight, the weight of the conventional air bag device is increased by so much. Since the air bag device for use in the driver's seat is usually attached to a steering means, there has been a problem that it requires a greater force for rotating the steering means if the weight of the air bag device is large. In addition, an anti-rusting treatment is required for the retainer or the container made of iron, which increases the manufacturing cost.

Object and Summary of the Invention

An object of the present invention is to provide an air bag device having a retainer or a container which is light in weight and free from rusting.

In a first aspect of the present invention, there is provided an air bag device for use in a driver's seat, comprising a retainer having a main plate portion having an opening for mounting an inflator and a mounting member

upstanding from the side of the main plate portion, an air bag mounted at a rear portion thereof to the retainer, an inflator for generating a gas and a module cover for covering the air bag, wherein the retainer is made of a synthetic resin, a synthetic resin is secured to a rear portion of the air bag and the synthetic resin is welded or bonded to the retainer made of the synthetic resin.

In a second aspect of the present invention, there is provided an air bag device for use in a passenger's seat, comprising a vessel-like container having an opening at the front, an air bag mounted at a rear portion thereof to the container, folded and contained in the container, an inflator mounted to the container to generate a gas for extending the air bag, and a lid for covering the front opening of the container, wherein the container is made of a synthetic resin, a synthetic resin is secured to a rear portion of the air bag and the synthetic resin is welded or bonded to the container made of the synthetic resin.

In the present invention, the synthetic resin may be either a thermoplastic synthetic resin or a thermosetting synthetic resin.

Since the retainer or the container is made of the synthetic resin, the weight of the retainer or the container can be reduced. If the synthetic resin is FRP (Fiber Reinforcing Synthetic Resin), or mesh or punched metal is

buried in the synthetic as required, the strength can be increased sufficiently.

The air bag can be firmly secured to the retainer or the container by securing the synthetic resin by means of immersion or the like to the rear portion of the air bag and bonding or welding the synthetic resin to the retainer or the container made of the synthetic resin.

Brief Description of the Drawings

Fig. 1 is a cross sectional view for an air bag device 10 according to a preferred embodiment; and

Fig. 2 is a cross sectional view for an air bag device 40 according to an another preferred embodiment.

Preferred Embodiments

Description will now be made by way of preferred embodiments with reference to the drawings. Fig. 1 is a cross sectional view illustrating a retainer used for an air bag device for use in a driver's seat according to a preferred embodiment of the present invention,

An air bag device 10 for use in a driver's seat mainly comprises a retainer 12, an air bag 14, an inflator 16 and a module cover 18.

The retainer 12 comprises a main plate portion 20 in a square plate shape, and a mounting member 22 upstanding

from the sides of the main plate portion 20. An opening 24 is formed at the center of the main plate portion 20 for inserting an inflator therethrough. Further, bolt passing holes 26 are perforated to a mounting member 22 for mounting the air bag device to the steering means of an automobile.

The retainer 12 used for the air bag device is made of a glass fiber-reinforced synthetic resin and a reinforcing metal mesh 30 is buried in the main plate portion 20 and the mounting member 22, respectively.

The module cover 18 is made of a synthetic resin, which is bonded or welded to the mounting member 22 of the retainer 12. A tear line 18a is disposed for tearing the module cover 18 when the air bag 14 is extended by a gas jetted out of the inflator 16. The module cover 18 may be attached to the mounting member 22 by means of rivets or bolts.

The air bag 14 has an opening 32 for receiving the head of the inflator 16, and a ring 34 is secured by immersing a synthetic resin at a peripheral edge of the opening 32. The ring 34 is secured to the main plate portion 20 of the retainer 12 by welding or bonding. The synthetic resin for the ring 34 may contain reinforcing fibers.

A ring 36 made of a synthetic resin is secured also

to a flanged portion 16a of the inflator 16, and the ring 36 is welded or bonded to the main plate portion 20 of the retainer 12. This facilitates the mounting of the inflator and reliably prevents a gas from leaking through a gap between the flanged portion 16a and the retainer 12. The inflator may be secured to the retainer by bolts in the same manner as usual.

The thus constituted air bag device is light in weight since the retainer 12 is made of the synthetic resin and free from rusting. In addition, since it is reinforced with the mesh 30, the strength is high. In addition, since the rings 34 and 36 secured to the air bag 14 and the inflator 16 are welded or bonded to the retainer 12, bolts for securing the air bag or the inflator to the retainer are no more necessary and the weight can be reduced by so much. Further, bolt tightening operation is no more required to make the production easy.

Fig. 2 is a cross sectional view of an air bag device 40 for use in a passenger's seat according to a preferred embodiment. A container 42 is in a shape of a vessel opened at the front and has an inflator 44 disposed to the rear portion thereof. An air bag 46 is folded and contained in the container 42. The front opening of the container 42 is covered with a lid 48.

The container 42 is made of a synthetic resin and

reinforced with a mesh 50. A frame portion 52 along the inner circumferential surface of the container 42 is formed by immersing the end of the air bag 46 in a synthetic resin.

The frame portion 52 is secured to the container 42 by welding or bonding. The lid 48 is also made of a synthetic resin, and mounting members 48a, 48b are secured to the container 42 by welding or bonding. A tear line 48c is disposed to the mounting member 48b, so that the mounting member 48b is torn at the portion of the tear line 48c when the air bag 46 is extended by the gas jetted out from the inflator 44, and the lid 48 is actuated in the opening direction as shown by an arrow S. The synthetic resin of the frame 52 may contain reinforcing fibers.

Also in the air bag device 40, since the container 42 is made of the synthetic resin and reinforced with the mesh 50, it is light in weight, free from rusting and has high strength. Further, since the air bag 46 and the lid 48 are secured by welding or bonding to the container 42, the weight is reduced by so much as the weight of the mounting bolts, small screws or rivets, as well as bolt tightening or like other operation is no more necessary to facilitate assembling.

In a case of welding, both of synthetic resins to be welded are made of thermoplastic synthetic resin. Then, both of the portions to be welded are stacked and heated

and pressurized.

In the foregoing embodiments, although the retainer 12 and the container 42 are reinforced with the mesh 30 or 50, it may also be reinforced with a punched plate or high strength fibers such as long glass fibers, long carbon fibers and aromatic polyamide fibers. In addition, chopped strands of fibers other than the glass fibers such as carbon fibers may be incorporated in the synthetic resin.

As has been described above, since the retainer or the container in the first or the second aspect of the air bag device according to the present invention is made of the synthetic resin, it is extremely reduced in weight. In addition, it shows no rusting and is excellent in durability. Further, the air bag can be secured firmly and also easily by means of welding or bonding the retainer or the container.

WHAT IS CLAIMED IS

1. An air bag device for use in a driver's seat comprising a retainer having a main plate portion having an opening for mounting an inflator and a mounting member upstanding from the side of said main plate portion, an air bag and an inflator mounted to said retainer and a module cover for covering said air bag, wherein

said retainer is made of a synthetic resin, a synthetic resin is secured to a portion of said air bag in an annular shape so as to surround the opening for mounting said inflator, and the annular synthetic resin is welded or bonded to said retainer made of the synthetic resin.

2. An air bag device for use in a passenger's seat comprising a vessel-like container opened at the front, an air bag mounted to said container and folded and contained in said container, an inflator mounted to said container for generating a gas for extending said air bag and a lid for covering the front opening of the container, wherein

said container is made of a synthetic resin, a synthetic resin is secured to a portion of said air bag in a circulating annular shape so as to be along with the inner surface of said container, and the annular synthetic resin is welded or bonded to said container.

3. An air bag device comprising:

an air bag having an opening at a rear portion and folded such that it can be extended forwardly,

a vessel-like containing means for containing said air bag, the containing means having a portion which opens when said air bag is extended,

an inflator disposed to said containing means for generating a gas for extending said air bag,

a synthetic resin block secured to the periphery of the opening of said air bag, and

a synthetic resin portion constituting at least a portion of said containing means, said block being jointed to said synthetic resin portion.

4. An air bag device as defined in claim 3, wherein the joint is made by welding.

5. An air bag device as defined in claim 3, wherein the joint is made by bonding.

6. An air bag device as defined in claim 3, wherein the air bag device is for use in a driver's seat,

the containing means comprises a retainer made of a synthetic resin having an opening for mounting an inflator and a mounting member upstanding from the side of said

opening, and

a module cover made of a synthetic resin mounted to said retainer, in which

said block is joined to the edge of the opening of said retainer.

7. An air bag device as defined in claim 3, wherein the air bag device is an air bag device for use in a passenger's seat,

the containing means comprises a container made of a synthetic resin opened at the front and a lid made of a synthetic resin for covering the front opening of said container, in which

said block is joined to the inner surface of said container.

8. An air bag device as defined in claim 6, wherein the inflator has a flange extending sideway, said flange is covered with a synthetic resin and the synthetic resin of said flange is jointed to said retainer by at least one of bonding and welding.

9. An air bag device as defined in claim 6, wherein the module cover is joined to the retainer by at least one of bonding and welding.

10. An air bag device as defined in claim 7, wherein the lid is jointed to the container by at least one of bonding and welding.

11. An air bag device as defined in claim 6, wherein the retainer contains a reinforcing material.

12. An air bag device as defined in claim 7, wherein the container contains a reinforcing material.

13. An air bag device substantially as hereinbefore described with reference to the accompanying description and either Figure 1 or Figure 2 of the drawings.

Patents Act 1977
Examiner's report to the Comptroller under Section 17 (The Search Report)

Application number
GB 9316314.5

Relevant Technical fields

(i) UK Cl (Edition L) B7B (BSB)

(ii) Int Cl (Edition 5) B60R 21/16,20

Search Examiner
PAT EVERETT

Databases (see over)

(i) UK Patent Office

(ii) ONLINE DATABASES: EDOC, WPIL

Date of Search
24 SEPTEMBER 1993

Documents considered relevant following a search in respect of claims 1-13

Category (see over)	Identity of document and relevant passages	Relevant to claim(s)
Y	GB 2251222 A (TAKATA) Note synthetic resin body 56	3
Y	GB 2250483 A (TAKATA) Note synthetic resin member 26, which may be moulded on to the bag 16	1
Y	GB 2237247 A (TAKATA) An example of a synthetic resin retainer 14	1
Y	GB 1531069 A (BAYERISCHE) Note page 2 lines 92-97	3
Y	US 5085463 A (KOLBENSCHIDT) An example of a thermoplastic air bag container	3
Y	US 5121941 A (TRW) Note column 5 lines 61-66	3

Categories of documents

X: Document indicating lack of novelty or of inventive step.

Y: Document indicating lack of inventive step if combined with one or more other documents of the same category.

A: Document indicating technological background and/or state of the art.

P: Document published on or after the declared priority date but before the filing date of the present application.

E: Patent document published on or after, but with priority date earlier than, the filing date of the present application.

&: Member of the same patent family, corresponding document.

Databases: The UK Patent Office database comprises classified collections of GB, EP, WO and US patent specifications as outlined periodically in the Official Journal (Patents). The on-line databases considered for search are also listed periodically in the Official Journal (Patents).