B7298

W. A. HARVEY.

ELECTRIC LAMP.

APPLICATION FILED SEPT. 13, 1910.

**998,895.** Patented July 25, 1911.

2 SHEETS—SHEET 1.

Fig. 1.

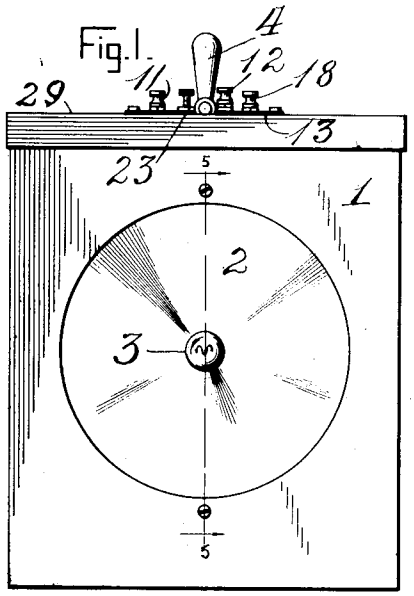


Fig. 2.

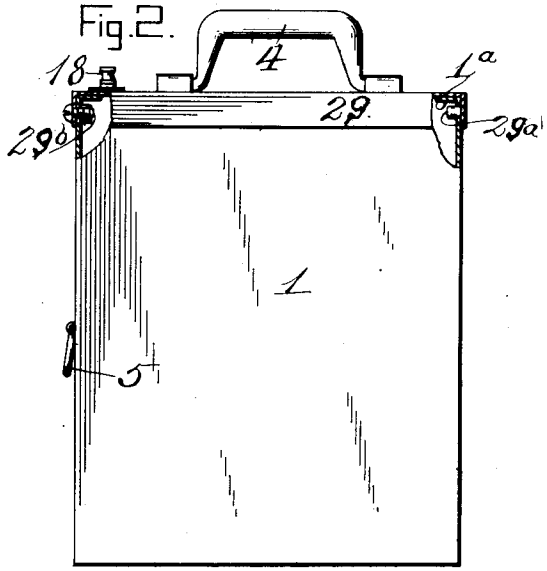


Fig. 3.

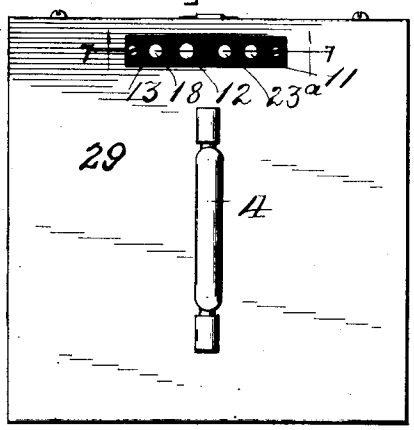


Fig. 4.

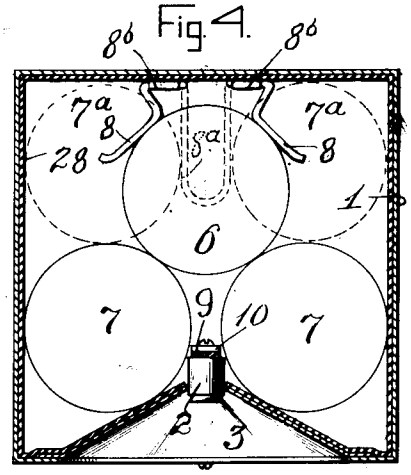


Inventor

William A. Harvey

By Knight Bros

Attorneys

Witnesses

C. K. Reichenbach.

J. M. Stynkoof.

W. A. HARVEY.

ELECTRIC LAMP.

APPLICATION FILED SEPT. 13, 1910.

**998,895.** Patented July 25, 1911.

2 SHEETS—SHEET 2.

Fig. 5.

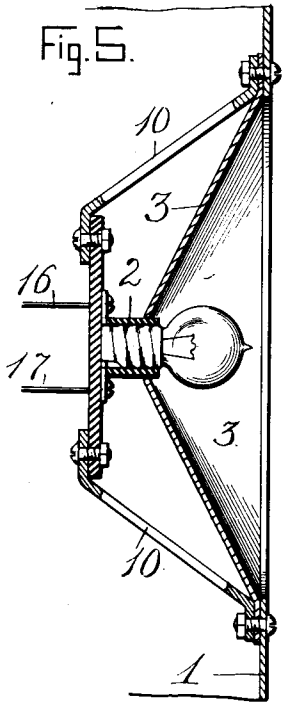


Fig. 6.

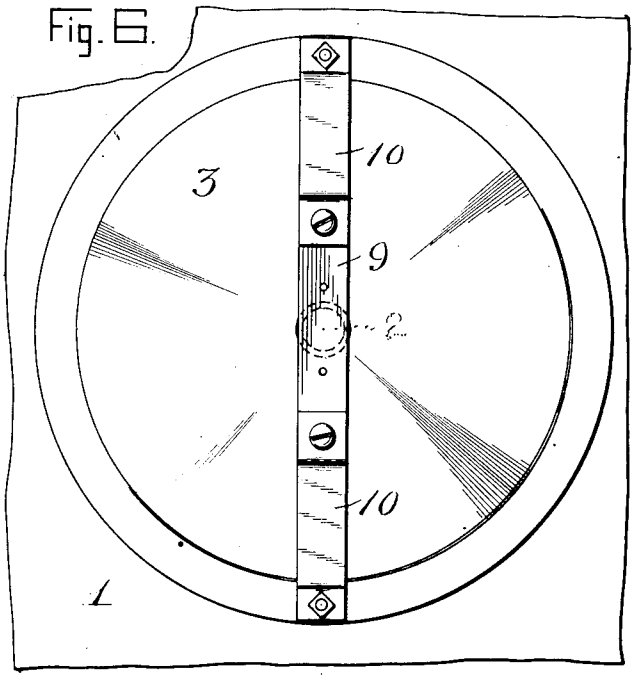


Fig. 7.

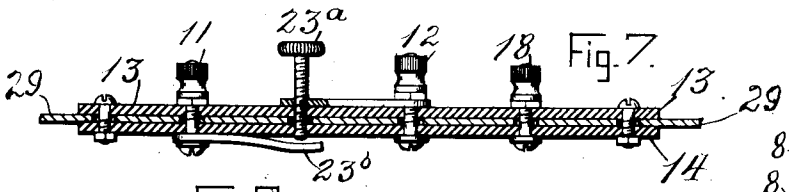


Fig. 11.

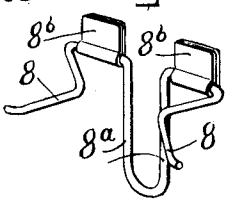


Fig. 8.

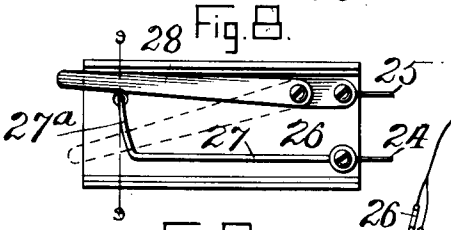


Fig. 9.

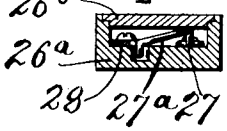


Fig. 10.

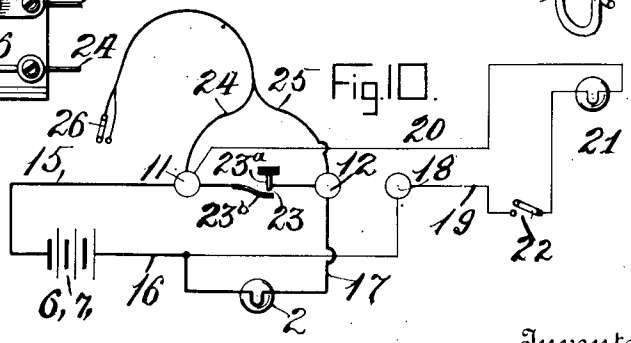


Witnesses

C. K. Reichenbach.

J. M. Wynkoop.

Inventor

William A. Harvey,

By Knight Bros.,

Attorneys.

# UNITED STATES PATENT OFFICE.

WILLIAM A. HARVEY, OF SCRANTON, PENNSYLVANIA.

## ELECTRIC LAMP.

998,895. Specification of Letters Patent. Patented July 25, 1911.

Application filed September 13, 1910. Serial No. 581,898.

*To all whom it may concern:*

Be it known that I, WILLIAM A. HARVEY, a citizen of the United States, and resident of Scranton, in the county of Lackawanna and State of Pennsylvania, have invented certain new and useful Improvements in Electric Lamps, of which the following is a specification.

This invention relates to a lamp which is portable in the sense that both the lamp and the source of electricity are self-contained and can be located at will at any desired place to be illuminated, but which is nevertheless provided with controlling circuits and switches accessible from a remote point in order that the illumination may be established and extinguished prior to and after leaving the place of illumination; the lamp being also preferably provided with a local switch by which it may be controlled at the lamp proper and also with a relatively movable independent lamp having its individual controlling switch and adapted to be moved about for directing illumination to points not reached by the definitely located main lamp.

The invention will be fully understood upon reference to the accompanying drawings, in which,

Figures 1, 2, 3 and 4 illustrate the lamp proper without the external circuits, said figures being, respectively, a front view, a side view partly in section, a top plan view, and a horizontal section. Figs. 5 and 6 represent by vertical section and by rear view on an enlarged scale, the reflector and support for the bulb of the located lamp. Fig. 7 is a sectional view of the insulating mounting for the binding posts and the local switch of the located lamp. Fig. 8 is a detail view of the remote switch. Fig. 9 is a section on the line 9—9, Fig. 8. Fig. 10 is a schematic view of the located lamp, the local and remote switches therefor, of the relatively movable lamp and its switch and of the common source of current, and Fig. 11 is a detail view of the combined cell embracer and spacer.

1 represents the main lamp, which it is desired to adapt not only for locating in a place where electric equipment is not already present, but which also is desired to be portable, for which reasons the lamp is constructed in the form of a suitable receptacle having the illuminating bulb 2 surrounded by a suitable reflector 3, carrying handle 4 and a suspending handle 5 preferably located so that the lamp may be hung overhead.

The receptacle 1 contains a suitable source of electricity preferably embodied in dry cells 6 and 7, or $6^a$ and 7. The reflector 3 forms a reëntrant wall of the receptacle 1, and thus acts as a separator for the cells 7. If a single cell 6 is used, it lies between the cells 7 in a manner to coöperate with the reflector 3, keeping the cells 7 spaced apart and said cell 6 is in turn embraced and held in place by a resilient cradle or seat 8. But if two rear cells $6^a$ are employed along with the front cells 7, they abut against the front cells 7 to hold them in place and are themselves spaced apart and held against lateral displacement by means of a cell spacer $8^a$, introduced between them (see dotted lines Fig. 4). For conveniently adapting the receptacle to thus receive and properly hold either three or four cells, at will, the embracer 8 and spacer $8^a$ are provided in a single structure (see Fig. 11) and made to extend at right angles to each other so that when hinged to the wall of the receptacle by bearing straps such as $8^b$, the device may be swung through an arc of 90° to bring either the embracer or the spacer into position of use; either of the parts lying against the wall when the other part is in position of use, and thereby preventing its displacement. The bulb or socket 2 is supported by a vertical bar 9 of insulating material supported by brackets 10 attached above and below the reflector 3, thereby providing a laterally reduced support for the socket, which avoids infringing upon the battery space and affords rigid support for the socket.

For suitably connecting the lead wires from the battery and the lamp among themselves and with the external circuits, binding posts 11 and 12 are mounted upon the insulating plates 13, 14, on the top wall 29 of the lamp receptacle. Binding post 11 is connected by wire 15 with one pole of the battery 6, 7, which is in turn connected by wire 16 with one pole of the lamp 2, while the other pole of the lamp is connected by wire 17 with the binding post 12. A third binding post 18 is connected with the battery wire 16 in order to adapt the terminals for the attachment of an independent exter-

nal circuit 19, 20, for feeding a relatively movable lamp 21 which may be controlled by an independent switch 22.

The main lamp is controlled either by a local switch 23 which may be provided by the set screw $23^a$ and spring tongue $23^b$, or said main lamp may be controlled through an exterior circuit 24, 25 leading from a remote switch 26.

Switch 26 is preferably constructed of a relatively long resilient contact 27 having an arm $27^a$ extending transversely toward and downwardly to a plane beneath the swinging switch arm 28 which is thereby adapted to ride up on the arm $27^a$. This provides a very cheap and efficient and very durable switch, which may be held in the hand or hung or laid about in any convenient position. The mounting for this switch 26 comprises a suitable base $26^a$ and a cover plate $26^b$, both of insulating material. The cover of the receptacle is represented at 29, preferably constructed with down-turned flanges fitting over the main body of the receptacle and connected therewith through a stud $29^a$ and a screw $29^b$. The upper edges of the side walls of the receptacle are provided with inturned flanges $1^a$ to stiffen the walls and receive the cover. The interior of the receptacle is preferably lined throughout with an insulating material $1^b$.

A combined portable and hanging electric lamp of the character described with its local and remote controlling switches, affords a very cheap and convenient means of illuminating dark places not permanently equipped with connections for electric or other lights, and the provision of the extension or relatively movable lamp circuit greatly increases the range of use for a device of this kind, in that it permits illumination of dark corners or adjacent compartments.

I claim:—

1. An electric lamp comprising a suitable receptacle having a reflector providing a reentrant wall and batteries contained within the receptacle and spaced apart by said reëntrant wall.

2. An electric lamp comprising a receptacle having a reëntrant wall providing a reflector on its exterior surface and a battery spacing means within the receptacle, a lamp socket disposed in suitable relation to said reflector, and a support for the lamp socket comprising a bar suitably supported in the plane of separation of the batteries.

3. An electric lamp comprising a suitable receptacle having a reflector forming a reentrant wall, a lamp socket in suitable relation to the reflector, a bar supporting the socket, located in the plane of the apex of the reëntrant wall, and brackets supporting said bar.

4. In a self-contained electric battery lamp, a receptacle having a reëntrant wall on one side and cell retaining means at the opposite side, and a battery comprising a group of cells spaced apart on the one side by said reëntrant wall and confined against lateral displacement, on the other side, by said cell retaining means.

5. In a self-contained electric battery lamp, a receptacle having a reëntrant front wall and a rear wall provided with cell retaining means, and a battery comprising cells in abutment, confined between said front and rear walls and spaced apart at front by said reëntrant wall and confined against lateral displacement at the rear by said cell retaining means.

6. In a self-contained electric battery lamp, a receptacle having a reëntrant front wall, an opposed rear wall, a battery cell embracer centrally disposed on said rear wall, and a battery comprising three cells disposed with two of the cells lying against and spaced apart by the reëntrant front wall and with the third cell lying against and over the space between said two cells and seated in the embracer carried by the rear wall.

7. In a self-contained electric lamp, a receptacle adapted to receive cells having a reëntrant wall adapted to space said cells and a combined spacer and embracer located on another wall of, and within the receptacle, comprising an arm adapted to enter between two cells and also a concave seat adapted to receive a cell, and mounted on the wall of the receptacle adapted to move to bring either of its members into position of use.

8. An electric lamp comprising a receptacle having a reëntrant wall, a battery comprising cells spaced apart by said reentrant wall, a third battery bearing between the batteries first named and assisting in spacing them apart, and means carried by the receptacle for holding said third battery in position.

9. An electric lamp comprising a receptacle having a reëntrant wall, batteries spaced apart by said reëntrant wall, a third battery bearing between the batteries first named and assisting in spacing them apart, and means carried by the receptacle for holding said third battery in position, comprising a resilient cradle or seat conforming to a portion of the surface of said third battery.

10. An electric lamp comprising a suitable receptacle having a reëntrant wall and adapted to contain battery cells in position to be spaced apart by said wall, a lamp socket located in the depression provided by the said wall and extending through the apex thereof, an insulated bar mounted within the receptacle, extending across the apex of the reëntrant wall, in position be-

tween and parallel to the battery cells and supporting the lamp socket, an external switch, and a circuit including the external switch and the lamp socket, and adapted for connection with the battery cells.

11. An electric lamp comprising a suitable receptacle provided with a reëntrant wall adapted to space apart battery cells placed within the receptacle and a hanger for said receptacle on the external wall opposite to said reëntrant wall and centered with relation thereto, whereby the lamp may be suspended in position to cause the batteries to lie by gravity in the seats provided for them by the reëntrant wall.

12. An electric lamp comprising a suitable receptacle having a reëntrant wall, battery cells lying on opposite sides of said reëntrant wall and spaced apart thereby, a third cell lying in the space between the cells first named and assisting in spacing them apart and a suspending support for said receptacle centered on the external wall opposite said reëntrant wall, whereby the battery cells are caused to maintain their described relation by gravity.

The foregoing specification signed at Scranton, Penna., this ninth day of August, 1910.

WILLIAM A. HARVEY.

In presence of—
JOHN TAYLOR,
EVAN HOPKINS.