FORM 1

COMMONWEALTH OF AUSTRALIA

PATENTS ACT 1952

APPLICATION FOR A STANDARD PATENT

I\We,

KOBUNSHI GIKEN KABUSHIKI KAISHA

of 7-4, YAMADANISHI 3-CHOME, SUITA-SHI, OSAKA, JAPAN

hereby apply for the grant of a standard patent for an invention entitled:

METHOD OF MANUFACTURING RESIN OVERLAY PLATE

which is described in the accompanying complete specification

Details of basic application(s):

Number of basic application	Name of Convention country in which basic application was filed	Date of basic application
122337/1989	JP	16 MAY 89
181251/1989	JP	13 JUL 89
40608/1990	JP	20 FEB 90

My/our address for service is care of GRIFFITH HACK & CO., Patent Attorneys, 601 St. Kilda Road, Melbourne 3004, Victoria, Australia.

DATED this 15th day of May 1990

KOBUNSHI GIKEN KABUSHIKI KAISHA
GRIFFITH HACK & CO.

TO: The Commissioner of Patents.

AUSTRALIA

PATENTS ACT 1952

B

APPLICATION BY ASSIGNEE OF INVENTOR

DECLARATION IN SUPPORT OF AN APPLICATION FOR A PATENT

NAME OF APPLICANT

In support of an application made by:

Kobunshi Giken Kabushiki Kaisha

TITLE

for a patent for an invention entitled:

METHOD OF MANUFACTURING RESIN OVERLAY PLATE

FULL NAME AND ADDRESS OF SIGNATORY

I, Kohei Deguchi

of 7-4,Yamadanishi 3-chome,Suita-shi,Osaka,Japan

do solemnly and sincerely declare as follows:

1. I am authorised by the above mentioned applicant for the patent to make this declaration on its behalf.

FULL NAME AND ADDRESS OF INVENTOR(S)

2. The name and address of each actual inventor of the invention is as follows:

Mitsuo Matsumoto

of 7-13,Yamadanishi 3-chome,Suita-shi,Osaka,Japan;

Kohei Deguchi

of 7-4,Yamadanishi 3-chome,Suita-shi,Osaka,Japan

SEE NOTES OVER

3. The facts upon which the applicant is entitled to make this application are as follows:

The applicant is the assignee of the actual inventors.

DELETE PARAGRAPHS 3 AND 4 FOR NON-CONVENTION APPLICATION

4. The basic application(s) as defined by Section 141 of the Act was (were) made as follows: Please see attached sheet.

Country on

in the name(s)

and in on

in the name(s)

PLACE AND DATE OF SIGNING

5. The basic application(s) referred to in the preceding paragraph was (were) the first application(s) made in a Convention country in respect of the invention the subject of this application.

Declared at Osaka Japan

this 18th day of April 1990

Signed Kohei Deguchi Kohei Deguchi

Position President

GRIFFITH HACK & CO

PATENT AND TRADE MARK ATTORNEYS

MELBOURNE · SYDNEY · PERTH

4. The basic applications as defined by Section 141 of the Act were made as follows.

Country	Japan	on	May 16,1989
in the name	Kobunshi Giken Kabushiki Kaisha		
and in	Japan	on	July 13,1989
in the name	Kobunshi Giken Kabushiki Kaisha		
and in	Japan	on	February 20,1990
in the name	Kobunshi Giken Kabushiki Kaisha		

(12) PATENT ABRIDGMENT (11) Document No. AU-B-55025/90
(19) AUSTRALIAN PATENT OFFICE (10) Acceptance No. 622320

(54) Title
METHOD OF MANUFACTURING RESIN OVERLAY PLATE

International Patent Classification(s)
(51)[5] B29C 043/30 B27D 001/00 B32B 021/08 B32B 031/06
B32B 031/20

(21) Application No. : 55025/90 (22) Application Date : 15.05.90

(30) Priority Data

(31) Number	(32) Date	(33) Country
1-122337	16.05.89	JP JAPAN
1-181251	13.07.89	JP JAPAN
2-040608	20.02.90	JP JAPAN

(43) Publication Date : 22.11.90

(44) Publication Date of Accepted Application : 02.04.92

(71) Applicant(s)
KOBUNSHI GIKEN KABUSHIKI KAISHA

(72) Inventor(s)
MITSUO MATSUMOTO; KOHEI DEGUCHI

(74) Attorney or Agent
GRIFFITH HACK & CO , GPO Box 1285K, MELBOURNE VIC 3001

(56) Prior Art Documents
AU 562096 16433/83 B32B 21/08 27/04

(57) Claim

1. A method of manufacturing a resin overlay plate, comprising feeding an adhesive polyolefin copolymerization resin in a molten state between a polyolefin resin film and a non woven fabric, affixing said polyolefin resin film to said non woven fabric by applying pressure, and cooling to form a composite sheet having said non woven fabric bonded to one side of said polyolefin resin film through said adhesive polyolefin copolymerization resin, superimposing said composite sheet on a wood plate by an adhesive with said non woven fabric being on the side of said wood plate, and pressing the composite sheet to bond said composite sheet to said wood plate.

AUSTRALIA

PATENTS ACT 1952

Form 10

COMPLETE SPECIFICATI

(ORIGINAL)

FOR OFFICE USE

602320

Short Title:

Int. Cl:

Application Number:
Lodged:

Complete Specification-Lodged:
Accepted:
Lapsed:
Published:

Priority:

Related Art:

TO BE COMPLETED BY APPLICANT

Name of Applicant: KOBUNSHI GIKEN KABUSHIKI KAISHA

Address of Applicant: 7-4, YAMADANISHI 3-CHOME, SUITA-SHI, OSAKA, JAPAN

Actual Inventor:

Address for Service: GRIFFITH HACK & CO., 601 St. Kilda Road, Melbourne, Victoria 3004, Australia.

Complete Specification for the invention entitled:
METHOD OF MANUFACTURING RESIN OVERLAY PLATE

The following statement is a full description of this invention including the best method of performing it known to me:-

TITLE OF THE INVENTION

Method of Manufacturing Resin Overlay Plate

BACKGROUND OF THE INVENTION

Field of the Invention

The present invention relates generally to a method of manufacturing a resin overlay plate having polyolefin resin overlaid on its surface, and more particularly, to a method of manufacturing a resin overlay plate used as a concrete framework.

Description of the Prior Art

It has been heretofore known that polyolefin resin having superior properties as a surface material of a concrete framework is overlaid on the surface of a plate for a framework, as disclosed in, for example, Japanese Patent Publication Nos. 22334/1983, 32109/1987, 11984/1988 and 53343/1987.

The above described Japanese Patent Publication Nos. 22334/1983, 32109/1987 and 11984/1988 disclose a method of manufacturing a plate for a framework by thermally welding a polyolefin resin sheet to a substrate using resin for hot melt adhesive.

The above described Japanese Patent Publication No. 53343/1987 discloses a method of bonding a polyolefin resin film to plywood by subjecting one side thereof to corona discharge machining and then, applying adhesive thereto.

polyolefin resin inherently has the property of not adhering to materials other than polyolefin because it is non-polar. Therefore, in order to overlay the polyolefin resin film on a wood base material, it is necessary to subject the side on which the polyolefin resin film is bonded to corona discharge machining to polarize a part of surface molecules and apply relatively expensive adhesive such as epoxy denaturated acrylic resin adhesive thereon as adhesive. However, this method has the disadvantage in that the adhesive strength between the polyolefin resin film and the wood base material is not still satisfactory.

Furthermore, in order to join the polyolefin resin film to a wood plate, a method of thermally welding the polyolefin resin film to the wood plate using resin for hot melt adhesive has been known. This method is advantageous in terms of the adhering cost and the adhesive strength. However, this method has the disadvantage in that it is difficult to manufacture a resin overlay plate because water in the wood plate rapidly evaporates by heating, water vapor expands at the time of releasing hot pressing to form vapor bubbles on the lower side of molten resin for adhesive, and the bubbles push up the polyolefin resin film to expand the surface of the polyolefin resin film.

Additionally, in the conventional overlay plate for a concrete framework, natural wood is used without any

modification. Accordingly, in many cases, cracking, nibbling or the like occurs on the surface of the base material. With respect to the quality of the surface of first-class plywood for a concrete framework in the Japanese Agricultural Standard (JAS), cracking 1.5 mm in width, nibbling 10 mm in long diameter or the like is recognized. If such a concave portion such as cracking or nibbling is directly overlaid, the concave portion becomes a bridge of only the polyolefin resin sheet, resulting in lowered physical strength.

Moreover, any one of the above described conventional methods is not a method of subjecting a polyolefin resin film to overlay processing in the step of primary processing for manufacturing a wood plate such as plywood or a particle board but a method of subjecting a polyolefin resin film to overlay processing again as secondary processing on a wood plate such as plywood of a particle board commercialized once.

According to the present invention there is provided a method of manufacturing a resin overlay plate, comprising feeding an adhesive polyolefin copolymerization resin in a molten state between a polyolefin resin film and a non woven fabric, affixing said polyolefin resin film to said non woven fabric by applying pressure, and cooling to form a composite sheet having said non woven fabric bonded to one side of said polyolefin resin film through said adhesive polyolefin copolymerization resin, superimposing said composite sheet on a wood plate by an adhesive with said non woven fabric being on the side of said wood plate, and pressing the composite sheet to bond said composite sheet to said wood plate.

A first method of manufacturing a resin overlay plate according to the present invention is characterized by feeding adhesive polyolefin copolymerization resin in a molten state between a polyolefin resin film and a non woven fabric, affixing the above polyolefin resin film and the above non woven fabric by applying pressure, followed by cooling to make a composite sheet having the above non woven fabric bonded to one side of the above polyolefin resin film through the above adhesive polyolefin copolymerization resin,

AUSTRALIAN PATENT OFFICE MTS

superimposing the above composite sheet on a wood plate through adhesive with the above non woven fabric being on the side of the above wood plate, and pressing the composite sheet to bond the above composite sheet to the above wood plate.

AUSTRALIAN PATENT OFFICE

Reactive curing adhesive such as wood adhesive commonly employed, for example, urea resin, melamine resin, phenol resin, urethane resin, epoxy resin, ultraviolet curing resin, their mixtures or resin formed by co-condensation is used as the above described adhesive. In addition, polyvinyl acetate emulsion resin, flour or the like may be used for purposes such as increase in quantity.

The resin overlay plate is specifically manufactured in, for example, the following manner.

First, a polyolefin resin film and a non woven fabric are continuously fed toward a pressure roll, respectively. The above polyolefin resin film and the above non woven fabric are affixed by applying pressure using the pressure roll while discharging adhesive polyolefin copolymerization resin in a molten state in a curtain shape between the polyolefin resin film and the non woven fabric using an extruder and a T die. Consequently, the adhesive polyolefin copolymerization resin in a molten state melts on the surface of the polyolefin resin film to be welded to the polyolefin resin film, while penetrating into gaps between fibers of the non woven fabric to be firmly bonded to the fibers. Thereafter, the adhesive polyolefin copolymerization resin is solidified by cooling, to obtain a composite sheet.

In manufacturing the composite sheet, the temperature

of the adhesive polyolefin copolymerization resin, the pressure loading, the time period during which pressure is applied and the like are adjusted in consideration of the relation between the melt properties of the adhesive polyolefin copolymerization resin and the degree of the gaps between the fibers of the non woven fabric so that the adhesive polyolefin copolymerization resin suitably penetrates into the non woven fabric. If the adhesive polyolefin copolymerization resin insufficiently penetrates into the non woven fabric, sufficient anchor effect is not obtained, resulting in lowered adhesive strength. On the other hand, if it excessively penetrates into the non woven fabric, the adhesive polyolefin copolymerization resin is forced out on the reverse side of the non woven fiber, which is a problem in bonding the composite sheet to a wood plate.

The composite sheet is bonded to the wood plate such as plywood, a particle board or a wafer board in, for example, the following manner.

First, the reactive curing adhesive is applied to the surface of the wood plate, and the composite sheet is superimposed thereon with the non woven fabric being on the side of the wood plate. The composite sheet is hot-pressed at a temperature not exceeding the melting point of resin constituting the composite sheet using hot pressing or is pressed at ordinary temperature using cold pressing.

Consequently, the adhesive penetrates into the gaps between the fibers of the non woven fabric. The adhesive is then hardened by reaction. Accordingly, when the hot pressing is released, the adhesion of the adhesive is exerted. Consequently, even if water vapor is emitted from the wood plate, no bubbles are formed inside of the composite sheet, to obtain a resin overlay plate high in adhesive strength.

The present invention is to firmly connect and bond the polyolefin resin and the wood plate which are not inherently bonded easily in molecular structure by the fibers of the non woven fabric. It is considered that the polyolefin resin and the wood plate are bonded in a method of heating the adhesive polyolefin copolymerization resin to be brought into a molten state and using the same as adhesive. However, if it is desired to overlay the polyolefin resin film on the wood plate in this method, the overlay becomes difficult because water in the wood plate evaporates in a large amount of vapor, the vapor pulls up the adhesive polyolefin copolymerization resin in a molten state at the time of releasing the hot pressing, to form bubbles.

According to the present invention, the composite sheet comprising the polyolefin resin and the non woven fabric is bonded to the wood plate. Accordingly, bubbles can be prevented from being formed at the time of releasing the pressing, thereby allowing the polyolefin resin to be firmly

bonded to the wood plate. More specifically, when the non woven fabric and the polyolefin resin film are bonded using the adhesive polyolefin copolymerization resin to manufacture the composite sheet, the non woven fabric and the polyolefin resin film are firmly bonded to each other by the penetration of the adhesive polyolefin copolymerization resin into the gaps between the fibers of the non woven fabric. When the composite sheet is bonded to the wood plate using the reactive curing adhesive, the reaction curing adhesive easily penetrates into the gaps between the fibers of the non woven fabric, to be hardened through reaction.

In this manner, the adhesive polyolefin copolymerization resin penetrates into the non woven fabric from one side, while the reactive curing adhesive penetrates thereinto from the other side. Accordingly, the non woven fabric performs such a function that the fibers thereof connect both the resin and the adhesive to each other in a state in which almost all the gaps are filled with the adhesive polyolefin copolymerization resin and the reactive curing adhesive.

Furthermore, when the composite sheet is bonded to the wood plate, water vapor is emitted inside of the composite sheet from the wood plate in the process of the hot pressing. In the present invention, however, the water

vapor can be deaerated by the non woven fabric in the composite sheet. More specifically, a few gaps remain in the vicinity of fine fibers, although almost all the gaps between the fibers of the non woven fabric are impregnated with the adhesive polyolefin copolymerization resin and the reactive curing adhesive. The remaining gap becomes an escape route of water vapor. Accordingly, water vapor remaining inside of the composite sheet is significantly decreased, thereby to avoid the occurrence of troubles such as expansion and puncture of the composite sheet at the time of releasing the hot pressing.

Thus, the non woven fabric has a deaeration function. Accordingly, the wood plate can be subjected to overlay processing using the composite sheet in the processes of manufacturing the wood plate such as plywood, a particle board or a wafer board.

Furthermore, even in a case where there exist concave portions such as cracking and nibbling on the surface of the wood plate, the concave portions are covered with the composite sheet integrated with the non woven fabric, thereby to obtain a resin overlay plate high in physical strength, particularly rigidity.

More specifically, according to the present invention, adhesive commonly employed can be utilized for bonding the composite sheet to the wood plate, and the composite sheet

and the wood plate are firmly bonded to each other at a temperature lower than that in a hot melt method. Furthermore, in bonding the composite sheet to the wood plate by heating, the non woven fabric, on the side of which the composite sheet is bonded, in the composite sheet becomes an escape route of water vapor emitted from the wood plate, thereby causing no bubble troubles.

Furthermore, the resin overlay plate manufactured in this method has polyolefin resin on its surface. Accordingly, the composition in wood which affects the hardening reaction of ready-mixed concrete is interrupted by resin on the surface, thereby eliminating the possibility of harming the concrete. In addition, the resin overlay plate serving as a framework is easily removed from the concrete without adhering to the concrete after hardening the concrete because the polyolefin resin is non-polar, thereby causing no hard to a molded concrete product. Furthermore, the polyolefin resin is chemically stable. Accordingly, the resin overlay plate has the superior property of being able to be repeatedly used a large number of times without changing even if it is subjected to alkalies, water, heat generation or the like of the ready-mixed concrete for a long time.

Moreover, the fibrous non woven fabric is formed inside of the polyolefin resin film. Accordingly, the strength of

the surface layer is high. Even if there are some disadvantages on the surface of the wood plate, the strength can be kept relatively high.

Additionally, a second method of manufacturing a resin overlay plate according to the present invention is characterized by subjecting one side of a polyolefin resin film to oxidation processing and then, affixing a non woven fabric to the side, which is subjected to oxidation processing, of the above polyolefin resin film using first adhesive to make a composite sheet, superimposing the above composite sheet on a wood plate with the above non woven fabric being on the side of the above wood plate, and pressing the composite sheet to bond the above composite sheet to the above wood plate.

A biaxially oriented polypropylene film is used, for example, as the above polyolefin resin film.

Aquatic vinyl polyurethane adhesive, epoxy denaturated acrylic emulsion type adhesive, polyester polyurethane elastomeric adhesive or the like is used as the above first adhesive. It is desirable that the thickness to which the adhesive is applied is slightly larger in consideration of the penetration to fibers of the non woven fabric, that is, 30 to 50 g/m^2.

Reactive curing adhesive such as wood adhesive commonly employed, for example, urea resin, melamine resin, phenol

resin, urethane resin, epoxy resin, ultraviolet curing resin, their mixtures or resin formed by co-condensation is used as the above second adhesive. If the resin overlay plate is used as a concrete framework, adhesive relatively high in water resistance is used as the above reactive curing adhesive.

The resin overlay plate is specifically manufactured in, for example, the following manner.

First, the polyolefin resin film and the non woven fabric are continuously fed toward a pressure roll, respectively. The side on which the polyolefin resin film is bonded is previously subjected to oxidation processing such as corona discharge machining, to polarize the surface thereof.

Then, the first adhesive is applied to the side on which the polyolefin resin film is bonded and the non woven fabric is superimposed thereon, followed by heating and pressing by nip rolls. Consequently, a composite sheet is obtained.

The composite sheet is bonded to the wood plate such as plywood, a particle board or a wafer board in, for example, the following manner.

First, the second adhesive is applied to the surface of the wood plate, and the composite sheet is superimposed thereon with the non woven fabric being on the side of the

wood plate and is pressed by pressing at ordinary temperature. Consequently, the reactive curing adhesive penetrates into gaps between the fibers of the non woven fabric.

Thereafter, the composite sheet is heated and pressed using hot pressing. Consequently, the adhesive is hardened by reaction. Accordingly, when the hot pressing is released, the adhesion of the adhesive is exerted. Therefore, even if water vapor is emitted from the wood plate, no bubbles are formed inside of the composite sheet, thereby to obtain a resin overlay plate high in adhesive strength.

If the type of the reactive curing adhesive is suitably selected, the composite sheet can be also bonded to the wood plate by only cold pressing. In addition, the resin overlay plate can be also continuously manufactured using the pressure roll.

If it is desired to firmly bond the polyolefin resin film directly to the wood plate, which both are not inherently bonded easily in molecular structure, it is difficult to obtain ideal adhesion conditions because there are many factors limited such as temperature conditions, water contained in the wood plate or the shape of the wood plate.

According to the present invention, the polyolefin

resin film and the non-woven fabric are first bonded to manufacture a composite sheet. Since the composite sheet on the side of the non woven fabric is bonded to the wood plate, sufficient adhesive strength is obtained even using cheap wood adhesive. In addition, water vapor emitted from the wood plate is caused to escape to the exterior through the gaps between the fibers of the non woven fabric at the time of adhesion processing, thereby allowing vapor troubles at the time of adhesion processing to be avoided.

Thus, the non woven fabric has a deaeration function. Accordingly, in the processes of manufacturing the wood plate such as plywood, a particle board or a wafer board, the wood plate can be subjected to overlay processing using the composite sheet.

Furthermore, even in a case where there exist concave portions such as cracking and nibbling on the surface of the wood plate, the concave portions are covered with the composite sheet integrated with the non woven fabric, thereby to obtain a resin overlay plate high in physical strength, particularly rigidity.

More specifically, according to the present invention, in bonding the composite sheet to the wood plate by heating, the non woven fabric, on the side of which the composite sheet is bonded, in the composite sheet becomes an escape route of water vapor emitted from the wood plate, thereby

causing no bubble troubles. Consequently, in the processes of manufacturing the wood plate, the composite sheet can be bonded to the wood plate simultaneously with the manufacture of the wood plate. In addition, the wood plate and the composite sheet can be bonded utilizing adhesive commonly employed. Therefore, there can be provided a low-priced resin overlay plate superior in quality.

Furthermore, in the resin overlay plate manufactured in this method, the fibrous non woven fabric is formed inside of the polyolefin resin film. Accordingly, the strength of the surface material is high. Even if there are some disadvantages on the surface of the wood plate, the strength can be kept relatively high.

Additionally, a third method of manufacturing a resin overlay plate according to the present invention is characterized by feeding polyolefin resin onto one side of a non woven fabric using a laminator, affixing the polyolefin resin and the non woven fabric by applying pressure, followed by cooling to make a composite sheet having a polyolefin resin layer on one side of the above non woven fabric, superimposing the above composite sheet on a wood plate through adhesive with the above non woven fabric being on the side of the above wood plate, and pressing the composite sheet to bond the above composite sheet to the above wood plate.

A non woven fabric manufactured by a dry method, a span bond method, a wet method or the like is used as the above non woven fabric. The non woven fabric manufactured by the wet method is slightly inferior in water resistance but is cheap. Furthermore, in order to improve the water resistance of the non woven fabric and increase the adhesion of the non woven fabric to the polyolefin resin, the non woven fabric may be previously impregnated with ethylene vinyl acetate resin by a method such as scattering or dipping.

As polyolefin resin, resin for applications is selected from polypropylene resin, high density polyethylene resin, low density polyethylene resin, ethylene vinyl acetate resin and the like. As the polyolefin resin, resin having high melting fluidity is preferable.

Reactive curing adhesive such as wood adhesive commonly employed, for example, urea resin, melamine resin, phenol resin, urethane resin, epoxy resin, ultraviolet curing resin, their mixtures or resin formed by co-condensation is used as the above described adhesive. If the resin overlay plate is used as a concrete framework, adhesive relatively high in water resistance is used as the above reactive curing adhesive.

The resin overlay plate is specifically manufactured in, for example, the following manner.

The polyolefin resin is discharged in a curtain shape from a T die onto the non woven fabric continuously fed using an extrusion laminator commonly employed and is pressed by a pressure roll. Consequently, the polyolefin resin penetrates into the non woven fabric and is cooled after heat therein is carried away by the roll, thereby to obtain a composite sheet comprising the polyolefin resin layer and the non woven fabric impregnated with the polyolefin resin.

The polyolefin resin does not inherently have polarity. However, if the temperature of the polyolefin resin discharged from the T die is set to be considerably high, the surface of the polyolefin resin in a curtain shape comes into contact with air after the discharge. Consequently, oxidation proceeds. In order to make longer the time period during which this oxidation reaction proceeds, it is preferable to set the air gap between a resin discharge opening of the T die and the surface of the above non woven fabric to be larger. More specifically, it is preferable to set this air gap to approximately 150 to 180 mm.

In manufacturing the composite sheet, the selection of the polyolefin resin, the speed of lamination, the pressure loading and the like are adjusted in consideration of the relation between the melt properties of the polyolefin resin and the degree of gaps between fibers of the non woven

fabric so that the polyolefin rein suitably penetrates into the non woven fabric. If the polyolefin resin insufficiently penetrates into the non woven fabric, sufficient anchor effect is not obtained, resulting in lowered adhesive strength. On the other hand, if it excessively penetrates into the non woven fabric, the polyolefin resin is forced out on the reverse side of the non woven fabric, which is a problem in bonding the composite sheet to the wood plate.

The composite sheet is bonded to the wood plate such as plywood, a particle board or a wafer board in, for example, the following manner.

First, the reactive curing adhesive is applied to the surface of the wood plate, and the composite sheet is superimposed thereon with the non woven fabric being on the side of the wood plate and is pressed by pressing at ordinary temperature. Consequently, the reactive curing adhesive penetrates into the gaps between the fibers of the non woven fabric.

Thereafter, the composite sheet is heated and pressed using hot pressing. Consequently, the adhesive is hardened through reaction. Accordingly, when the hot pressing is released, the adhesion of the adhesive is exerted. Therefore, even if water vapor is emitted from the wood plate, no bubbles are formed inside of the composite sheet,

to obtain a resin overlay plate high in adhesive strength.

If the type of the reactive curing adhesive is suitably selected, the composite sheet can be also bonded to the wood plate by only cold pressing. In addition, the resin overlay plate can be also continuously manufactured using the pressure roll.

If it is desired to firmly bond the polyolefin resin film directly to the wood plate, which both are not inherently bonded easily in molecular structure, it is difficult to obtain ideal adhesion conditions because there are many factors limited such as temperature conditions, water contained in the wood plate or the shape of the wood plate.

According to the present invention, one side of the non woven fabric is first coated with the polyolefin resin, to manufacture the composite sheet. Since the composite sheet on the side of the non woven fabric is bonded to the wood plate, sufficient adhesive strength is obtained even using cheap wood adhesive. In addition, water vapor emitted from the wood plate is caused to escape to the exterior through the gaps between the fibers of the non woven fabric at the time of adhesion processing, thereby allowing vapor troubles at the time of adhesion processing to be avoided.

Thus, the non woven fabric has a deaeration function. Accordingly, in the processes of manufacturing the wood

plate such as plywood, a particle board or a wafer board, the wood plate can be subjected to overlay processing using the composite sheet.

Furthermore, even in a case where there exist concave portions such as cracking and nibbling on the surface of the wood plate, the concave portions are covered with the composite sheet integrated with the non woven fabric, thereby to obtain a resin overlay plate high in physical strength, particularly rigidity.

In manufacturing the composite sheet, the oxidation of the surface of the polyolefin resin film is speeded up to increase acid radicals by raising the temperature of the polyolefin resin discharged from the T die and setting the air gap between the discharge opening of the T die and the surface of the non woven fabric to be large, resulting in improved adhesive strength of the polyolefin resin film to a filament of the non woven fabric.

Furthermore, if the filament of the non woven fabric is previously coated with ethylene vinyl acetate emulsion in a method such as scattering and dipping, the adhesive strength of the polyolefin resin film to the filament of the non woven fabric is improved because there is compatibility of the ethylene vinyl acetate emulsion with the polyolefin resin.

More specifically, according to the present invention,

in bonding the composite sheet to the wood plate by heating, the non woven fabric, on the side of which the composite sheet is bonded, in the composite sheet becomes an escape route of water vapor emitted from the wood plate, thereby causing no bubble troubles. Consequently, in the processes of manufacturing the wood plate, the composite sheet can be bonded to the wood plate simultaneously with the manufacture of the wood plate. In addition, the wood plate and the composite sheet can be bonded utilizing adhesive commonly employed.

Furthermore, in the resin overlay plate manufactured in this method, the fibrous non woven fabric is formed inside of the polyolefin resin film. Accordingly, the strength of the surface material is high. Even if there are some disadvantages on the surface of the wood plate, the strength can be kept relatively high.

Additionally, even if no expensive adhesive copolymerization resin is used in manufacturing the composite sheet, the adhesive strength can be ensured and the water resistance can be maintained. Consequently, the cost of the raw material is reduced, thereby allowing a low-priced resin overlay plate superior in quality to be provided.

Furthermore, a fourth method of manufacturing a resin overlay plate according to the present invention is

characterized by feeding adhesive polyolefin copolymerization resin and polyolefin resin onto one side of a non-woven fabric using a two-coat extrusion laminator, affixing the resins and the non woven fabric by applying pressure, followed by cooling to make a composite sheet respectively having an adhesive polyolefin copolymerization resin layer formed on one side of the above non woven fabric and a polyolefin resin layer formed thereon, superimposing the above composite sheet on a wood plate with the above non woven fabric being on the above wood plate, and pressing the composite sheet to bond the above composite sheet to the above wood plate.

Reactive curing adhesive such as wood adhesive commonly employed, for example, urea resin, melamine resin, phenol resin, urethane resin, epoxy resin, ultraviolet curing resin, their mixtures, resin formed by co-condensation is used as the above described adhesive. If the resin overlay plate is used as a concrete framework, adhesive relatively high in water resistance is used as the above reactive curing adhesive.

The resin overlay plate is specifically made in, for example, the following manner.

The adhesive polyolefin copolymerization resin and the polyolefin resin are discharged in a curtain shape from a T die onto the non woven fabric continuously fed using the two-

coat extrusion laminator, and are pressed by a pressure roll. Consequently, the adhesive polyolefin copolymerization resin penetrates into the non woven fabric and is cooled after heat therein is carried away by the roll, thereby to obtain a composite sheet respectively having the adhesive polyolefin copolymerization resin layer formed on one side of the non woven fabric and the polyolefin resin layer formed thereon.

In manufacturing the composite sheet, the selection of the adhesive polyolefin copolymerization resin, the speed of lamination, the pressure loading and the like are adjusted in consideration of the relation between the melt properties of the adhesive polyolefin copolymerization resin and the degree of gaps between fibers of the non woven fabric so that the polyolefin resin suitably penetrates into the non woven fabric. If the adhesive polyolefin copolymerization resin insufficiently penetrates into the non woven fabric, sufficient anchor effect is not obtained, resulting in lowered adhesive strength. On the other hand, if it excessively penetrates into the non woven fabric, the adhesive polyolefin copolymerization resin is forced out on the reverse side of the non woven fabric, which is a problem in bonding the composite sheet to the wood plate.

Meanwhile, a composite sheet respectively having the adhesive polyolefin copolymerization resin layer formed on

one side of the non woven fabric and the polyolefin resin layer formed thereon may be manufactured by forming the adhesive polyolefin copolymerization resin and the polyolefin resin into films and then, superimposing the resin layers on the non woven fabric, and heating and melting the resin layers by hot pressing.

The composite sheet is bonded to the wood plate such as plywood, a particle board or a wafer board in, for example, the following manner.

First, the reactive curing adhesive is applied to the surface of the wood plate, and the composite sheet is superimposed thereon with the non woven fabric being on the side of the wood plate and is pressed by pressing at ordinary temperature. Consequently, the reactive curing adhesive penetrates into the gaps between the fibers of the non woven fabric.

Thereafter, the composite sheet is heated and pressed using hot pressing. Consequently, the adhesive is hardened by reaction. Accordingly, when the pressing is released, the adhesion of the adhesive is exerted. Therefore, even if a little water vapor remains inside of the composite sheet, no bubbles are formed, thereby to obtain a resin overlay plate high in adhesive strength.

If the type of the reactive curing adhesive is suitably selected, the composite sheet can be also bonded to the wood

plate by only cold pressing. In addition, the resin overlay plate can be also continuously manufactured using the pressure roll.

If it is desired to firmely bond the polyolefin resin film directly to the wood plate, which both are not inherently bonded easily in molecular structure, it is difficult to obtain ideal adhesion conditions because there are many factors limited such as temperature conditions, water contained in the wood plate or the shape of the wood plate.

According to the present invention, one side of the non woven fabric is coated with the adhesive polyolefin copolymerization resin and the polyolefin resin, to manufacture the composite sheet. Since the composite sheet on the side of the non woven fabric is bonded to the wood plate, sufficient adhesive strength is obtained even using cheap wood adhesive. In addition, water vapor emitted from the wood plate is caused to escape to the exterior through the gaps between the fibers of the non woven fabric at the time of adhesion processing, thereby allowing vapor troubles at the time of adhesion processing to be avoided.

Thus, the non woven fabric has a deaeration function. Accordingly, in the processes of manufacturing the wood plate such as plywood, a particle board or a wafer board, the wood plate can be subjected to overlay processing using

the composite sheet.

Furthermore, even in a case where there exist concave portions such as cracking and nibbling on the surface of the wood plate, the concave portions are covered with the composite sheet integrated with the non woven fabric, thereby to obtain a resin overaly plate high in physical strength, particularly rigidity.

More specifically, according to the present invention, in bonding the composite sheet to the wood plate by heating, the non woven fabric, on the side of which the composite sheet is bonded, in the composite sheet becomes an escape route of water vapor emitted from the wood plate, thereby causing no bubble troubles. Consequently, in the processes of manufacturing the wood plate, the composite sheet can be bonded to the wood plate simultaneously with the manufacture of the wood plate. In addition, the wood plate and the composite sheet can be bonded utilizing adhesive commonly employed.

Additionally, in the resin overlay plate manufactured in this method, the fibrous non woven fabric is formed inside of the polyolefin resin film. Accordingly, the strength of the surface material is high. Even if there are some disadvantages on the surface of the wood plate, the strength can be kept relatively high.

In the above described first to fourth methods of

manufacturing the overlay plate according to the present invention, if the above described wood plate is plywood having a plurality of veneers laminated, the composite sheet may be superimposed on the outermost surface of a group of the veneers laminated through thermosetting adhesive and hot-pressed in the assembly process out of the processes of manufacturing the above plywood, to bond the above composite sheet to the above plywood simultaneously with bonding of the veneers to each other. Thermosetting adhesive employed for plywood can be used as the above thermosetting adhesive.

This manufacturing method will be specifically described. In the assembly process out of the manufacturing processes of the plywood, the composite sheet is superimposed on the outermost surface of the group of the veneers laminated through the adhesive for plywood through the same type of adhesive for plywood with the non woven fabric being on the side of the outermost surface of the group of the veneers and then, is heated and pressed using hot pressing in the same manner as that in manufacturing ordinary plywood. The heating temperature is set to a temperature not exceeding the melting point of resin constituting the composite sheet. In this method, the composite sheet is bonded to the group of the veneers simultaneously with bonding of the veneers to each other, thereby allowing a resin overlay plate which can be

manufactured by simple processes and lowered in cost to be provided.

In the above described first to fourth methods of manufacturing the overlay plate according to the present invention, if the above described wood plate is a particle board or a wafer board having a plurality of wood pieces solidified, the composite sheet may be superimposed on the surface of a layer comprising a group of the wood pieces through the thermosetting adhesive and hot-pressed in the hardening and molding process out of the processes of manufacturing the above particle board or wafer board, to bond the above composite sheet to the above particle board or wafer board simultaneously with hardening and molding of the particle board or the wafer board.

This manufacturing method will be specifically described. The thermosetting adhesive is applied to the surface of the composite sheet on the side of the non woven fabric, a chip or wafer is formed thereon, and the composite sheet is hot-pressed and formed using hot pressing at a temperature not exceeding the melting point of resin constituting the composite sheet. In this method, the composite sheet is bonded to a group of veneers simultaneously with hardening and molding of the particle board or the wafer board, thereby allowing a resin overlay plate which can be manufactured by simple processes and

lowered in cost to be provided.

The foregoing and other objects, features, aspects and advantages of the present invention will become more apparent from the following detailed description of the present invention when taken in conjunction with the accompanying drawings.

BRIEF DESCRIPTION OF THE DRAWINGS

Fig. 1 is a diagram of the schematic construction showing a method of manufacturing a composite sheet;

Fig. 2 is a cross sectional view showing a resin overlay plate manufactured using the composite sheet made in the method shown in Fig. 1;

Fig. 3 is a cross sectional view showing another resin overlay plate manufactured using the composite sheet made in the method shown in Fig. 1;

Fig. 4 is a diagram of the schematic construction showing another method of manufacturing a composite sheet;

Fig. 5 is a cross sectional view showing a resin overlay plate manufactured using the composite sheet made in the method shown in Fig. 4;

Fig. 6 is a cross sectional view showing another resin overlay plate manufactured using the composite sheet made in the method shown in Fig. 4;

Fig. 7 is a diagram of the schematic construction showing still another method of manufacturing a composite

sheet;

Fig. 8 is a cross sectional view showing a resin overlay plate manufactured using the composite sheet made in the method shown in Fig. 7; and

Fig. 9 is a cross sectional view showing another resin overlay plate manufactured using the composite sheet made in the method shown in Fig. 7.

DESCRIPTION OF THE PREFERRED EMBODIMENTS

(Embodiment 1)

Referring now to Fig. 1, description is made of a method of manufacturing a composite sheet.

A film 40 μm thick of SHOLEX 2010HF made of SHOWA DENKO KABUSHIKI KAISHA is used as a polyolefin resin film 1. ELTAS N-5040 made of ASAHI CHEMICAL INDUSTRY CO., LTD. is used as a non woven fabric 2. ER RESIN ER523L made of SHOWA DENKO KABUSHIKI KAISHA is used as an adhesive polyolefin copolymerization resin 3. The temperature and the thickness of the copolymerization resin 3 discharged from an extruder 4 with a T die are respectively set to 240°C and 20 μm.

The copolymerization resin 3 is discharged onto the film 1 while respectively delivering the polyolefin resin film 1 and the non woven fabric 2 at a speed of 15 m per minute. The polyolefin resin film 1 and the non woven fabric 2 are affixed by applying pressure between a pressure roll 5 and a cooling roll 6 while interposing this

copolymerization resin 3 between the film 1 and the non woven fabric 2. Consequently, the copolymerization resin 3 in a molten state is welded to the film 1 and cooled while penetrating into gaps between fibers of the non woven fabric 2, and is further cooled by cooling rolls 7, thereby to make a composite sheet 8 having the polyolefin resin film 1 and the non woven fabric 2 firmly integrated with each other. The composite sheet 8 is wounded by a wind-up roll 9.

Description is now made of a method of manufacturing a resin overlay plate used for a concrete framework using the composite sheet 8 thus made.

Five-ply plywood for a framework 12 mm thick commercially available is used as a wood plate 10. A mixture of 20 % flour with melamine urea resin adhesive UM-82 made of AICA KOGYO CO., LTD. is used as adhesive 11.

The adhesive 11 is applied to the upper surface of the plywood 10 at a rate of 200 g/m^2, and the composite sheet 8 is mounted on the plywood 10 with the non woven fabric 2 in the composite sheet 8 being on the side of the plywood 10. The composite sheet 8 is cold-pressed for twenty minutes and then, hot-pressed for five minutes under conditions, that is, at a temperature of 105°C and at a pressure of 5 kg/cm^2. As a result, a resin overlay plate having the composite sheet 8 and the plywood 10 firmly bonded to each other is obtained. In addition, no bubbles are formed at the time of

releasing the hot pressing.

(Embodiment 2)

Adhesive obtained by mixing 20 % flour with phenol resin adhesive P-82 made of AICA KOGYO CO., LTD. is applied to the upper surface of wafer wood made of LOUISIANA-PACIFIC CORPORATION at a rate of 250 g/m^2. A composite sheet obtained in the same manner as that in the embodiment 1 is mounted on the wafer wood with the non woven fabric therein being on the side of the wafer wood. The composite sheet is cold-pressed for twenty minutes and then, hot-pressed for seven minutes under conditions, that is, at a temperature of 110°C and at a pressure of 5 kg/cm^2. As a result, a resin overlay wood plate for a concrete framework having the composite sheet 8 and the wafer wood 10 firmly bonded to each other and having a smooth and tough surface is obtained. In addition, no bubbles are formed at the time of releasing the hot pressing.

(Embodiment 3)

Adhesive obtained by mixing 10 % flour with urea resin adhesive UC-120 made of AICA KOGYO CO., LTD. is applied to both surfaces of nine South-Sea lauan veneers 1.3 mm thick. The veneers are superimposed on a curve wooden pattern of R600 such that their respective fibers cross at right angles. In addition, composite sheets 8 obtained in the same manner as that in the embodiment 1 are superimposed on

both outer surfaces of a group 10 of the veneers through the same adhesive 11 with non woven fabrics 2 therein being on the side of the group 10 of the veneers. The composite sheets 8 are bonded to the curve wooden pattern by applying pressure with electrode plates for high-frequency heating applied to their outer surfaces, heated at high frequencies while being pressed to at a pressure of approximately 5 kg/cm^2, and hot-pressed for twenty minutes with the interior temperature being approximately 80 to 100°C.

As a result, the adhesive 11 is completely hardened, to obtain resin overlay plywood of R600 approximately 12 mm thick whose both surfaces are overlaid with polyolefin resin sheets 1, as shown in Fig. 3.

(Embodiment 4)

Resin overlay plywood is manufactured in the same manner as that in the embodiment 1 except that ELTAS E-5040 made of ASAHI CHEMICAL INDUSTRY CO., LTD. is used as a non woven fabric. As a result, resin overlay plywood having superior properties as a plate for a concrete framework is obtained.

(Embodiment 5)

A composite sheet is manufactured in the same manner as that in the embodiment 1 except that a film 30 μm thick of SHO-ALLOMER FA201 made of SHOWA DENKO KABUSHIKI KAISHA is used as a polyolefin resin film, BEMLIESE JF-601 made of

ASAHI CHEMICAL INDUSTRY CO., LTD. is used as a non woven fabric, ER RESIN ER 321P made of SHOWA DENKO KABUSHIKI KAISHA is used as adhesive polyolefin copolymerization resin, and the temperature and the thickness of copolymerization resin discharged from an extruder with a T die are respectively set to 280°C and 30 μm.

Adhesive obtained by mixing 15 % flour with phenol melamine resin adhesive P-85 made of AICA KOGYO CO., LTD. is applied to the surface of this composite sheet on the side of the non woven fabric at a rate of 180 g/m^2.

Furthermore, a chip covered with adhesive is mounted on the surface coated with the same adhesive of the composite sheet by forming for each particle size, and the composite sheet is hot-pressed for fifteen minutes under conditions, that is, at a temperature of 145°C and at a pressure of 15 kg/cm^2. As a result, a resin overlay particle board 12 mm thick having superior properties as a plate for a concrete framework is obtained.

(Embodiment 6)

A resin overlay wafer board is manufactured in the same manner as that in the above described embodiment 5 except that a wafer is used in place of the chip. As a result, a resin overlay wafer board having superior properties as a plate for a concrete framework is obtained.

(Embodiment 7)

Adhesive obtained by mixing 20 % flour with melamine urea resin adhesive UM-82 made of AICA KOGYO CO., LTD. is applied to both surfaces of five South-Sea lauan veneers 2.4 mm thick at a rate of 200 g/m^2. The veneers are overlapped with each other such that their respective fibers cross at right angles, the same adhesive is further applied to the outer surfaces of a group of the veneers at the same rate and then, composite sheets manufactured in the same manner as that in the embodiment 5 are superimposed thereon with non woven fabrics therein being on the side of the group of the veneers. The composite sheets are hot-pressed for four minutes under conditions, that is, at a temperature of 120°C and at a pressure of 15kg/cm^2.

As a result, resin overlay plywood having superior properties as a plate for a concrete framework is obtained. In addition, no bubble troubles due to water vapor occur at the time of releasing the hot pressing.

(Embodiment 8)

Referring now to Fig. 4, description is made of a method of manufacturing a composite sheet.

A film 30 μm thick obtained by subjecting one side of a biaxially oriented and reinforced polypropylene film commercially available to oxidation processing by corona discharge machining is used as a polyolefin resin film 1. Polyester polyurethane adhesive for dry laminate made of

AICA KOGYO CO., LTD. is used as adhesive 23. BEMLIESE JF-601 made of ASAHI CHEMICAL INDUSTRY CO., LTD. 60 g/m^2 thick is used as a non woven fabric 2.

The polyolefin resin film 1 is delivered with the surface subjected to oxidation processing being on the lower side, and the adhesive 23 is applied to the surface subjected to oxidation processing of the polyolefin resin film 1 between a gravure roll 12 and a rubber roll 13. The adhesive 23 is made to adhere to the surface of the gravure roll 12 as the gravure roll 12 is rotated, an excess of the adhesive is scraped away by a doctor blade 14 and then, the adhesive 23 is made to adhere to the polyolefin resin film 1, thereby to apply the adhesive 23 on the polyolefin resin film 1 at a rate of 50 g/m^2.

The polyolefin resin film 1 coated with the adhesive 23 is heated and half-dried by a radiant dryer 15 and then, is superimposed on the non woven fabric 2. The polyolefin resin film 1 and the non woven fabric 2 are affixed by applying pressure between a rubber roll 5 and a pressure roll 6, to be a composite sheet 28. The composite sheet 28 is wound by a wind-up roll 9.

Referring now to Fig. 5, description is made of a method of manufacturing a resin overlay plate used for a concrete framework using the composite sheet 28 thus made.

Five-ply plywood for a framework 12 mm thick

commercially available is used as a wood plate 10. Adhesive obtained by mixing 10 % flour with melamine urea resin adhesive UM-82 made of AICA KOGYO CO., LTD. is used as adhesive 11.

The adhesive 11 is applied to the upper surface of the plywood 10 at a rate of 200 g/m^2, and the composite sheet 28 is mounted on the plywood 10 with a non woven fabric 2 in the composite sheet 28 being on the side of the plywood 10. The composite sheet 28 is cold-pressed for twenty minutes and then, hot-pressed for five minutes under conditions, that is, at a temperature of 105°C and at a pressure of 5 kg/cm^2. As a result, resin overlay plywood having the composite sheet 28 and the plywood 10 firmly bonded to each other is obtained. In addition, no bubbles are formed at the time of releasing the hot pressing.

(Embodiment 9)

Adhesive obtained by mixing 20 % flour with phenol resin adhesive P-82H made of AICA KOGYO CO., LTD. is applied to the upper surface of wafer wood 17.2 mm thick made of LOUISIANA-PACIFIC CORPORATION at a rate of 250 g/m^2. A composite sheet obtained in the same manner as that in the embodiment 8 is mounted on the wafer wood with a non woven fabric therein being on the side of the wafer wood.

The composite sheet is cold-pressed for twenty minutes and then, hot-pressed for seven minutes under conditions,

that is, at a temperature of 110°C and at a pressure of 5 kg/cm^2. As a result, a resin overlay wood plate having the composite sheet and the wafer wood firmly bonded to each other and having a smooth and tough surface is obtained. In addition, no bubbles are formed at the time of releasing the pressing.

(Embodiment 10)

Adhesive obtained by mixing 20 % flour with melamine urea resin adhesive UM-82 made of AICA KOGYO CO., LTD. is applied to nine South-Sea lauan veneers 1.3 mm thick at a rate of 200 g/m^2. The veneers are superimposed on a curve wooden pattern of R600 such that their respective fibers cross at right angles, and composite sheets 28 obtained in the same manner as that in the embodiment 8 are superimposed on both outer surfaces of a group 10 of the veneers through the same adhesive 11 with non woven fabrics 2 therein being on the side of the veneers. The composite sheets 28 are bonded to the curve wooden pattern by applying pressure with electrode plates for high-frequency heating applied to their outer surfaces, heated at high frequencies while being pressed to a pressure of approximately 5 kg/cm^2, and hot-pressed for twenty minutes with the interior temperature being approximately 80 to 100°C.

As a result, the adhesive 11 is completely hardened, to obtain resin overlay plywood of R600 approximately 12 mm

thick whose both surfaces are overlaid with polyolefin resin sheets 1, as shown in Fig. 6.

(Embodiment 11)

Resin overlay plywood is manufactured in the same manner as that in the embodiment 8 except that a non woven fabric 805-20 made of MIKI TOKUSHU PAPER MFG. CO., LTD. 20 g/m^2 thick is used as a non woven fabric. As a result, resin overlay plywood having superior properties as a plate for a concrete framework is obtained.

(Embodiment 12)

Adhesive obtained by mixing 20 % flour with phenol melamine resin adhesive P-85 made of AICA KOGYO CO., LTD. is applied to the surface of a composite sheet manufactured in the same manner as that in the embodiment 8 on the side of a non woven fabric at a rate of 200 g/m^2.

Furthermore, a chip covered with adhesive is mounted on the surface coated with the same adhesive of the composite sheet by forming for each particle size, and the composite sheet is hot-pressed for fifteen minutes under conditions, that is, at a temperature of 145°C and at a pressure of 15 kg/cm^2. As a result, a resin overlay particle board 15 mm thick having superior properties as a plate for a concrete framework is obtained.

(Embodiment 13)

A resin overlay wafer board is manufactured in the same

manner as that in the above described embodiment 12 except that a wafer is used in place of the chip. As a result, a resin overlay wafer board 15 mm thick having superior properties as a plate for a concrete framework is obtained.

(Embodiment 14)

Adhesive obtained by mixing 10 % flour with melamine urea resin adhesive UM-82 made of AICA KOGYO CO., LTD. is applied to both surfaces of five South-Sea lauan veneers 2.4 mm thick at a rate of 200 g/m^2. The veneers are overlapped with each other such that their respective fibers cross at right angles, the same adhesive is further applied to the outer surface of a group of the veneers and then, composite sheets manufactured in the same manner as that in the embodiment 8 are superimposed thereon with non woven fabrics 2 therein being on the side of the veneers. The composite sheets are hot-pressed for four minutes under conditions, that is, at a temperature of 120°C and at a pressure of 15 kg/cm^2.

As a result, resin overlay plywood having superior properties as a plate for a concrete framework is obtained. In addition, no bubble troubles due to water vapor occur at the time of releasing the pressing.

(Embodiment 15)

Referring now to Fig. 7, description is made of a method of manufacturing a composite sheet.

High density polyethylene LZ0139 made of SHOWA DENKO KABUSHIKI KAISHA is used as polyolefin resin 31. ELTAS N-5040 made of ASAHI CHEMICAL INDUSTRY CO., LTD. is used as a non woven fabric 2.

The polyolefin resin 31 is discharged in a curtain shape onto the non woven fabric 2 through an extruder 4 with a T die at a temperature of 310°C and with a thickness of 50 μm while delivering the non woven fabric 2 at a speed of 50 m per minute. The polyolefin resin 31 and the non woven fabric 2 are pressed between a pressure roll 5 and a cooling/pressure roll 6. Consequently, the polyolefin resin 31 in a molten state is cooled and solidified while penetrating into gaps between fibers of the non woven fabric 2, and is further cooled by cooling rolls 7, thereby to make a composite sheet 38 having the sheet-shaped polyolefin resin 31 and the non woven fabric 2 firmly integrated with each other. The composite sheet 38 is wound by a wind-up roll 9.

Referring now to Fig. 8, description is made of a method of manufacturing a resin overlay plate used for a concrete framework using the composite sheet 38 thus made.

Five-ply plywood 12 mm thick commercially available is used as a wood plate 10. Adhesive obtained by mixing 10 % flour with melamine urea resin adhesive UM-82 made of AICA KOGYO CO., LTD. is used as reactive curing adhesive 11.

The adhesive 11 is applied to the upper surface of the plywood 10 at a rate of 200 g/m^2, and the composite sheet 38 is mounted on the plywood 10 with the non woven fabric 2 in the composite sheet 38 being on the side of the plywood 10. The composite sheet 38 is cold-pressed for twenty minutes and then, hot-pressed for five minutes under conditions, that is, at a temperature of 105°C and at a pressure of 5 kg/cm^2. As a result, resin overlay plywood having the composite sheet 38 and the plywood 10 firmly bonded to each other is obtained. In addition, no bubbles are formed at the time of releasing the hot pressing.

(Embodiment 16)

Adhesive obtained by mixing 20 % flour with phenol resin adhesive P-82H made of AICA KOGYO CO., LTD. is applied to the upper surface of wafer wood 17.2 mm thick made of LOUISIANA-PACIFIC CORPORATION at a rate of 250 g/m^2. A composite sheet obtained in the same manner as that in the embodiment 15 is mounted on the wafer wood with a non woven fabric therein being on the side of the wafer wood. The composite sheet is cold-pressed for twenty minutes and then, hot-pressed for seven minutes under conditions, that is, at a temperature of 110°C and at a pressure of 5 kg/cm^2. As a result, a resin overlay wood plate having the composite sheet and the wafer wood firmly bonded to each other and having a smooth and tough surface is obtained. In addition,

no bubbles are formed at the time of releasing the pressing.

(Embodiment 17)

Adhesive obtained by mixing 20 % flour with melamine urea resin adhesive UM-82 made of AICA KOGYO CO., LTD. is applied to both surfaces of nine South-Sea lauan veneers 1.3 mm thick at a rate of 200 g/m^2. The veneers are superimposed on a curved wooden pattern of R600 with their respective fibers cross at right angles, and composite sheets 38 obtained in the same manner as that in the embodiment 15 are further superimposed on both outer surfaces of a group 10 of the veneers through the same adhesives 11 with non woven fabrics 2 therein being on the side of the group of the veneers.

The composite sheets 38 are bonded to the curve wooden pattern by applying pressure with electrode plates for high-frequency heating applied to their outer surfaces, heated at high frequencies while being pressed to a pressure of approximately 5 kg/cm^2, and hot-pressed for twenty minutes with the interior temperature being approximately 80 to 100°C.

As a result, the adhesive 11 is completely hardened, to obtain resin overlay plywood of R600 approximately 12 mm thick whose both surfaces are overlaid with polyolefin resin 31, as shown in Fig. 9.

(Embodiment 18)

Resin overlay plywood is manufactured in the same manner as that in the embodiment 15 except that BEMLIESE JF-404 made of ASAHI CHEMICAL INDUSTRY CO., LTD. 40 g/m^2 thick is used as a non woven fabric. As a result, resin overlay plywood having superior properties as a plate for a concrete framework is obtained.

(Embodiment 19)

Wet non woven fabric 805-20 made of MIKI TOKUSHU PAPER MFG. CO., LTD. 20 g/m^2 thick is used as a non woven fabric 2. Polypropylene LR510 made of SHOWA DENKO KABUSHIKI KAISHA is used as polyolefin resin 31.

As shown in Fig. 7, the polyolefin resin 31 is discharged in a curtain shape onto the non woven fabric 2 through an extruder 4 with a T die at a temperature of 300°C and with a thickness of 70 μm while delivering the non woven fabric 2 at a speed of 50 m per minute. The polyolefin resin 31 and the non woven fabric 2 are pressed between a pressure roll 5 and a cooling/pressure roll 6. Consequently, the polyolefin resin 31 in a molten state is cooled and solidified while penetrating into gaps between fibers of the non woven fabric 2, and is further cooled by cooling rolls 7, thereby to make a composite sheet 38 having the sheet-shaped polyolefin resin 31 and the non woven fabric 2 firmly integrated with each other. The composite sheet 38 is wounded by a wind-up roll 9.

Adhesive obtained by mixing 20 % flour with phenol melamine resin adhesive P-85 made of AICA KOGYO CO., LTD. is applied to the surface of the composite sheet thus made on the side of the non woven fabric at a rate of 200 g/m^2.

Furthermore, a chip covered with adhesive is mounted on the surface coated with the same adhesive of the composite sheet by forming for each particle size, and the composite sheet is hot-pressed for fifteen minutes under conditions, that is, at a temperature of 145°C and at a pressure of 15 kg/cm^2. As a result, an under-floor particle board, whose surface is not permeable to water, covered with the composite sheet is obtained. In addition, no bubbles are formed at the time of releasing the pressing.

(Embodiment 20)

A resin overlay wafer board is manufactured in the same manner as that in the above described embodiment 19 except that a wafer is used in place of the chip. As a result, a resin overlay wafer board 15 mm thick having superior properties as a plate for a concrete framework is obtained.

(Embodiment 21)

A resin overlay wafer board is manufactured in the same manner as that in the embodiment 20 except that a non woven fabric obtained by spraying a 20-fold dilute solution of ethylene vinyl acetate resin emulsion EF200 made of SHOWA HIGHPOLYMER CO., LTD. on a wet non woven fabric 805-20 made

of MIKI TOKUSHU PAPER MFG. CO., LTD. 20 g/m^2 thick at a rate of 20 g/m^2 and then, drying the same is used as a non woven fabric. As a result, a resin overlay wafer board having water resistance further strengthened is obtained.

(Embodiment 22)

Adhesive obtained by mixing 10 % flour with melamine urea resin adhesive UM-82 made of AICA KOGYO CO., LTD. is applied to both surfaces of five South-Sea lauan veneers 2.4 mm thick at a rate of 200 g/m^2, the veneers are overlapped with each other such that their respective fibers cross at right angles, the same adhesive is further applied to the outer surfaces of a group of the veneers at the same rate and then, composite sheets manufactured in the same manner as that in the embodiment 19 are superimposed thereon with non woven fabrics therein being on the side of the group of the veneers. The composite sheets are hot-pressed for four minutes under conditions, that is, at a temperature of 120°C and at a pressure of 15 kg/cm^2.

As a result, resin overlay plywood having superior properties as a plate for a concrete framework is obtained. In addition, no bubble troubles due to water vapor occur at the time of releasing the pressing.

(Embodiment 23)

A two-coat extrusion type extruder is used in place of

the extruder shown in Fig. 7, to discharge adhesive polyolefin copolymerization resin and polyolefin resin onto a non woven fabric by this extruder.

SHOLEX LZ0139 made of SHOWA DENKO KABUSHIKI KAISHA is used as the polyolefin resin. ER RESIN ER 420H made of SHOWA DENKO KABUSHIKI KAISHA is used as the adhesive polyolefin copolymerization resin. BEMLIESE WP252 made of ASAHI CHEMICAL INDUSTRY CO., LTD. is used as the non woven fabric.

The adhesive polyolefin copolymerization resin 30 μm thick and the polyolefin resin 70 μm thick are discharged in a curtain shape onto the non woven fabric through the two-coat extrusion type extruder with the total thickness of 100 μm and at a temperature of 290°C with the adhesive polyolefin copolymerization resin being on the side of the non woven fabric while delivering the non woven fabric at a speed of 50 m per minute, and are pressed between a pressure roll and a cooling/presure roll. Consequently, the adhesive polyolefin copolymerization resin in a molten state is cooled and solidified while penetrating into gaps between fibers of the non woven fabric, and is further cooled by cooling rolls, thereby to make a composite sheet having the sheet-shaped polyolefin resin and the non woven fabric firmly integrated with each other through the adhesive polyolefin copolymerization resin. The composite sheet is

wound by a wind-up roll.

Description is now made of a method of manufacturing a resin overlay plate used for a concrete framework using the composite sheet thus made.

Adhesive obtained by mixing 10 % flour with melamine urea resin adhesive UM-82 made of AICA KOGYO CO., LTD. at a rate of 200 g/m^2 is applied to both surfaces of five South-Sea lauan veneers 2.4 mm thick at a rate of 200 g/m^2. The veneers are overlapped with each other such that their respective fibers cross at right angles, the same adhesive is further applied to the outer surfaces of a group of the veneers at the same rate and then, the composite sheets made in the foregoing manner are superimposed thereon with the non woven fabrics therein being on the side of the veneers. The composite sheets are hot-pressed for four minutes under conditions, that is, at a temperature of 110°C and at a pressure of 15 kg/cm^2.

As a result, resin overlay plywood having superior properties as a plate for a concrete framework is obtained. No troubles due to water vapor occur at the time of releasing the pressing.

Although the present invention has been described and illustrated in detail, it is clearly understood that the same is by way of illustration and example only and is not to be taken by way of limitation, the spirit and scope of

the present invention being limited only by the terms of the appended claims.

THE CLAIMS DEFINING THE INVENTION ARE AS FOLLOWS:

1. A method of manufacturing a resin overlay plate, comprising feeding an adhesive polyolefin copolymerization resin in a molten state between a polyolefin resin film and a non woven fabric, affixing said polyolefin resin film to said non woven fabric by applying pressure, and cooling to form a composite sheet having said non woven fabric bonded to one side of said polyolefin resin film through said adhesive polyolefin copolymerization resin, superimposing said composite sheet on a wood plate by an adhesive with said non woven fabric being on the side of said wood plate, and pressing the composite sheet to bond said composite sheet to said wood plate.

2. The method of manufacturing a resin overlay plate according to claim 1, in which said wood plate comprises plywood having a plurality of veneers laminated together, and in which said composite sheet is superimposed on the outermost surface of the laminated veneers by a thermosetting adhesive to form an assembly and hot-pressing the assembly to bond said composite sheet to said plywood simultaneously with bonding of said veneers to each other.

3. The method of manufacturing a resin overlay plate according to claim 1, in which said wood plate comprises a particle board or a wafer board having a plurality of wood pieces solidified together to form the board and further comprising superimposing said composite sheet on a surface of a layer comprising a group of said wood pieces by a thermosetting adhesive to form an assembly and hot-pressing the assembly in the hardening and molding process to bond said composite sheet to said particle board or wafer board simultaneously with hardening and molding of said particle board or wafer board.

4. A method of manufacturing a resin overlay plate, comprising subjecting one side of a polyolefin resin film to oxidation processing and then, affixing a non woven fabric to the side subjected to oxidation processing of said polyolefin resin film using a first adhesive to form a composite sheet, superimposing said composite sheet on a wood

plate through a second adhesive with said non woven fabric being on the side of said wood plate, and pressing the composite sheet to bond said composite sheet to said wood plate.

5. The method of manufacturing a resin overlay plate according to any preceding claim, in which said polyolefin resin film comprises a biaxially oriented polypropylene film.

6. The method of manufacturing a resin overlay plate according to claim 4, in which said wood plate comprises plywood having a plurality of veneers laminated together, and comprising superimposing said composite sheet on the outermost surface of a group of the laminated veneers by a thermosetting adhesive to form an assembly and hot-pressing the assembly to bond said composite sheet to said plywood simultaneously with bonding of said veneers to each other.

7. The method of manufacturing a resin overlay plate according to claim 4, in which the wood plate comprises a particle board or a wafer board having a plurality of wood pieces solidified to form the board, and superimposing said composite sheet on the surface of a layer comprising a group of the wood pieces by a thermosetting adhesive to form an assembly and hot-pressing the assembly in the hardening and molding process to bond said composite sheet to said particle board or wafer board simultaneously with hardening and molding of said particle board or wafer board.

8. A method of manufacturing a resin overlay plate, comprising feeding polyolefin resin onto one side of a non woven fabric using a laminator, affixing the polyolefin resin and the non woven fabric by applying pressure, and cooling to make a composite sheet having a polyolefin resin layer formed on the side of said non woven fabric, superimposing said composite sheet on a wood plate by an adhesive with said non woven fabric being on the side of said wood plate, and pressing the composite sheet to bond said composite sheet to said wood plate.

9. The method of manufacturing a resin overlay

MTS

plate according to claim 8, in which said laminator has a resin extrusion hole and there is an air gap between the resin extrusion hole and the surface of said non woven fabric, wherein the air gap is set to such a size that the oxidation of said polyolefin resin extruded from the resin extrusion hole of said laminator is increased.

10. The method of manufacturing a resin overlay plate according to any preceding claim in which said non woven fabric comprises a wet non woven fabric.

11. The method of manufacturing a resin overlay plate according to any one of claims 1 to 9 in which said non woven fabric comprises a non woven fabric impregnated with ethylene vinyl acetate resin emulsion.

12. The method of manufacturing a resin overlay plate according to any one of claims 8 to 11, in which the wood plate comprises plywood having a plurality of veneers laminated together, and comprising superimposing said composite sheet on the outermost surface of a group of the laminated veneers by a thermosetting adhesive to form an assembly and hot-pressing the assembly to bond said composite sheet to said plywood simultaneously with bonding of said veneers to each other.

13. The method of manufacturing a resin overlay plate according to claim 8, in which the wood plate comprises a particle board or a wafer board having a plurality of wood pieces solidified to form the board, and superimposing said composite sheet on the surface of a layer comprising a group of the wood pieces by the thermosetting adhesive to form an assembly and hot-pressing the assembly in the hardening and molding process to bond said composite sheet to said particle board or wafer board simultaneously with hardening and molding of said particle board or wafer board.

14. A method of manufacturing a resin overlay plate, comprising feeding adhesive polyolefin compolymerization resin and polyolefin resin onto one side of a non woven fabric using two-coat extrusion laminator, affixing the resins and the non woven fabric by applying pressure, followed by cooling to form a composite sheet

AUSTRALIAN PATENT OFFICE

respectively having an adhesive polyolefin copolymerization resin layer formed on one side of said non woven fabric and a polyolefin resin layer formed thereon, superimposing said composite sheet on a wood plate by an adhesive with said non woven fabric being on the side of said wood plate, and pressing the composite sheet to bond said composite sheet to said wood plate.

15. The method of manufacturing a resin overlay plate according to claim 14, in which said wood plate comprises plywood having a plurality of veneers laminated together, and superimposing said composite sheet on the outermost surface of a group of the laminated veneers through a thermosetting adhesive to form an assembly and hot-pressing the assembly to bond said composite sheet to said plywood simultaneously with bonding of said veneers to each other.

16. The method of manufacturing a resin overlay plate according to claim 14, in which said wood plate comprises a particle board or a wafer board having a plurality of wood pieces solidified to form the board, and superimposing said composite sheet on the surface of a layer comprising a group of the wood pieces through the thermosetting adhesive and hot-pressing the assembly in the hardening and molding process to bond said composite sheet to said particle board or wafer board simultaneously with hardening and molding of said particle board or wafer board.

17. A resin overlay plate produced by the method of any one of the preceding claims.

18. A method of manufacturing a resin overlay plate substantially as hereinbefore described with reference to any one of the accompanying drawings.

19. A method of manufacturing a resin overlay plate substantially as hereinbefore described with reference to any one of the foregoing examples.

Dated this 13th day of January, 1992
KOBUNSHI GIKEN KABUSHIKI KAISHA
By its Patent Attorneys:
GRIFFITH HACK & CO.
Fellows Institute of Patent Attorneys of Australia.

MTS

FIG. 1

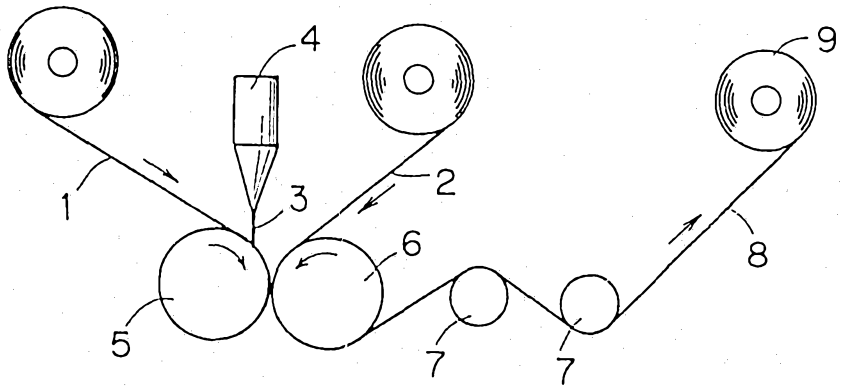

FIG. 2

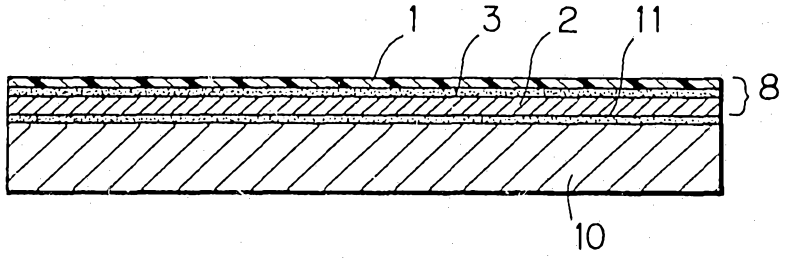

FIG. 3

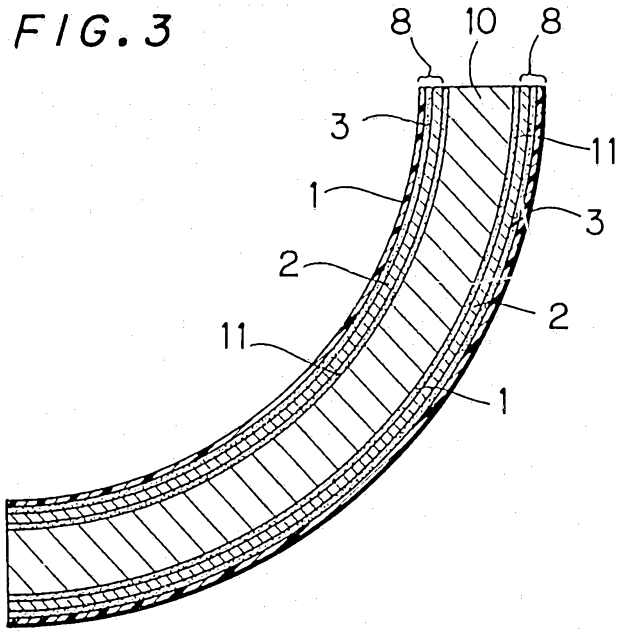

FIG. 4

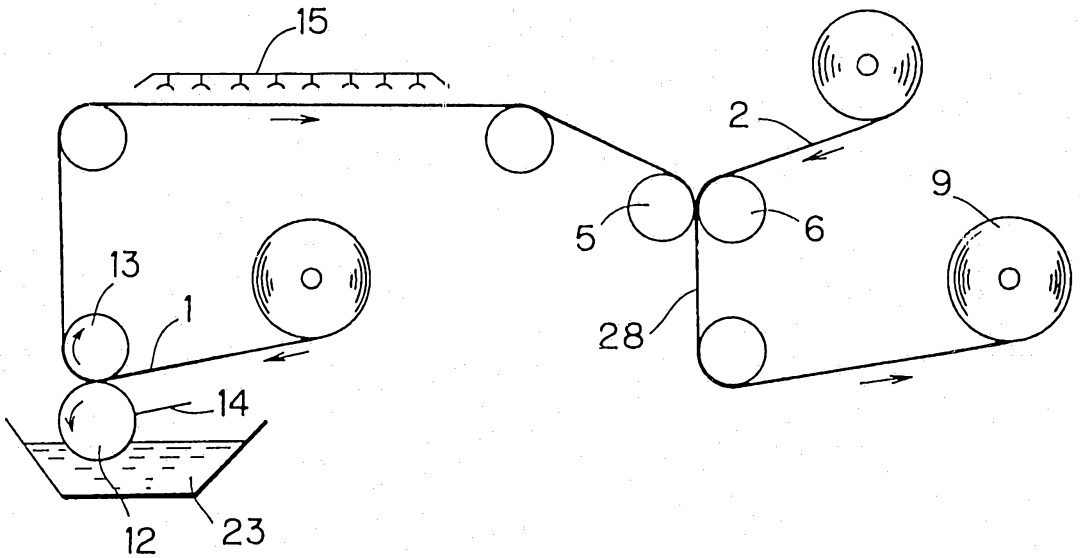

FIG. 5

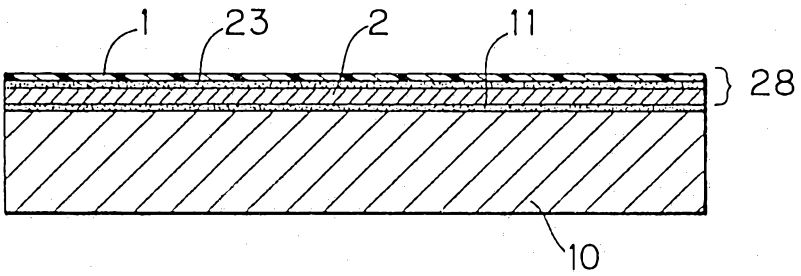

FIG. 6

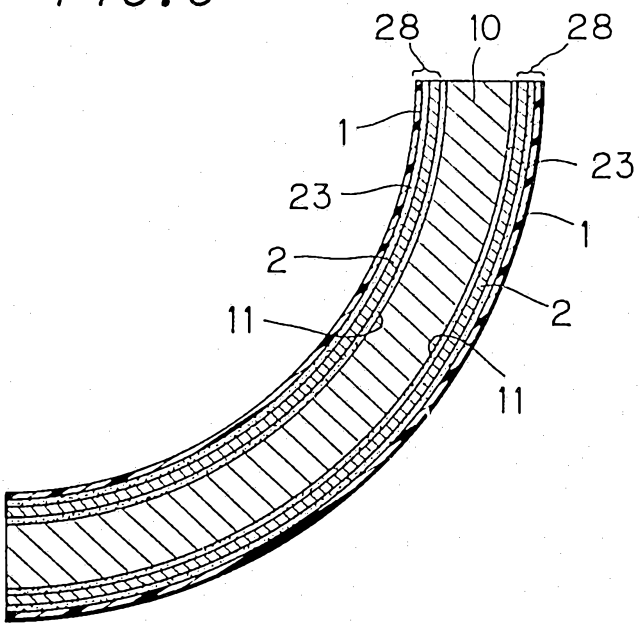

FIG. 7

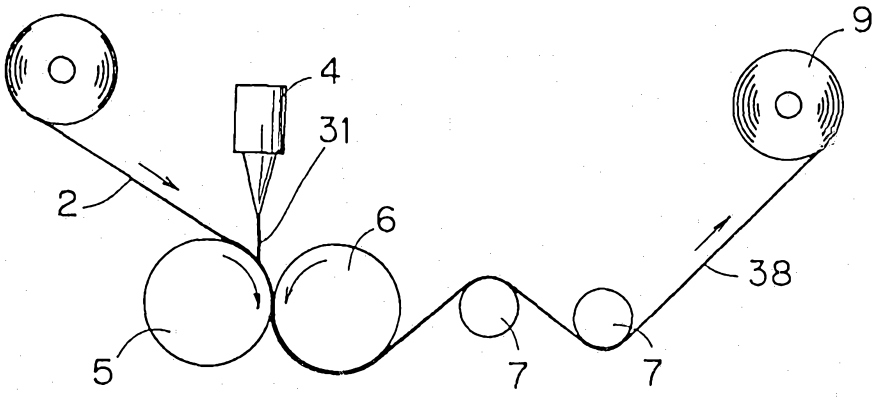

FIG. 8

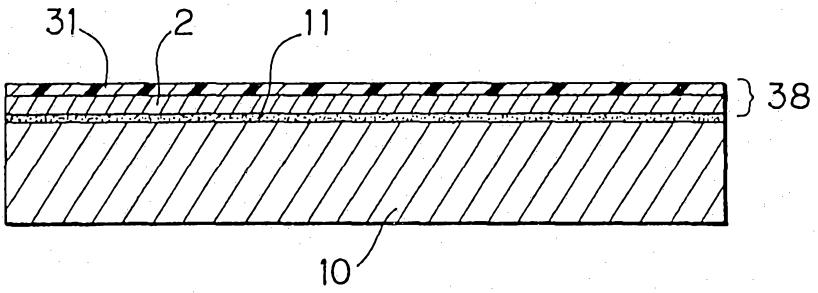
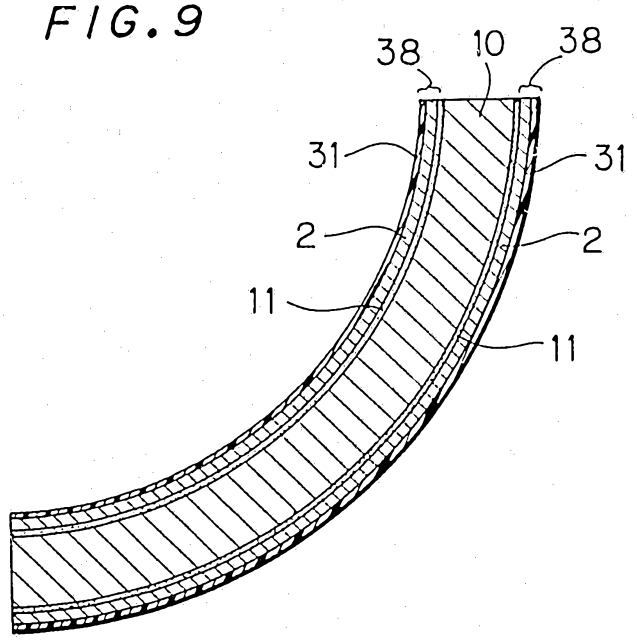
FIG. 9