March 14, 1961 J. REED ET AL 2,975,381

DUPLEXERS

Filed Feb. 21, 1957 2 Sheets-Sheet 1

FIG. 1

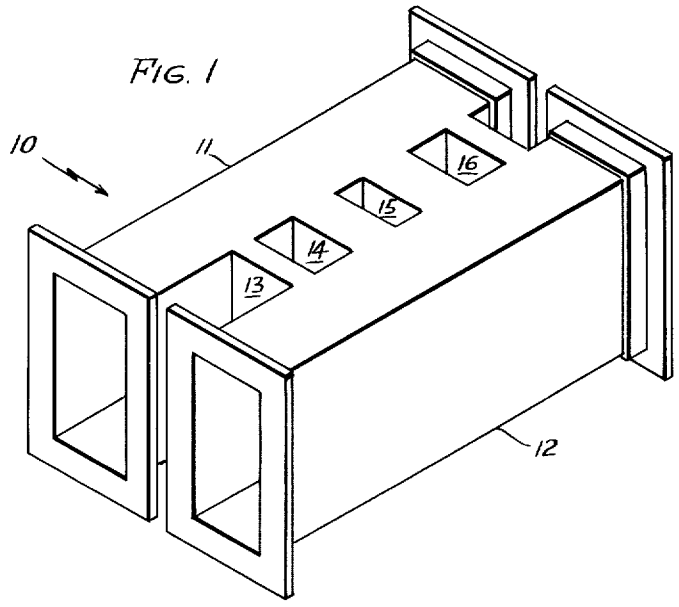

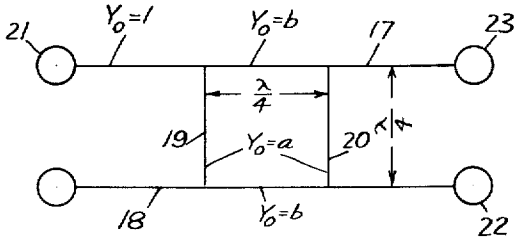

FIG. 3

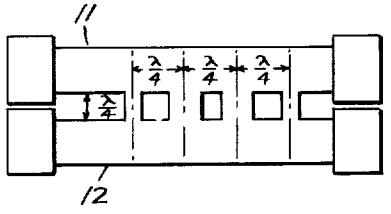

FIG. 2

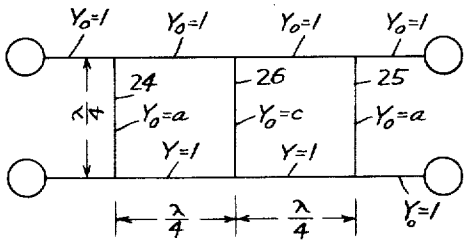

FIG. 4

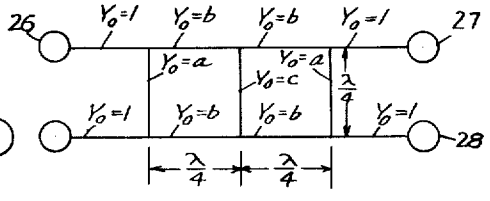

FIG. 5

INVENTORS

JOHN REED

GERSHON J. WHEELER

BY Elmer J. Gorn

ATTORNEY

March 14, 1961 J. REED ET AL 2,975,381

DUPLEXERS

Filed Feb. 21, 1957 2 Sheets-Sheet 2

FIG. 6

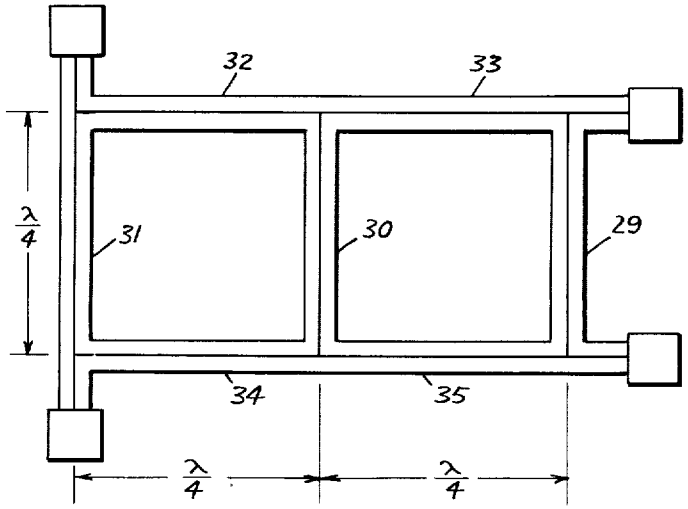

FIG. 7

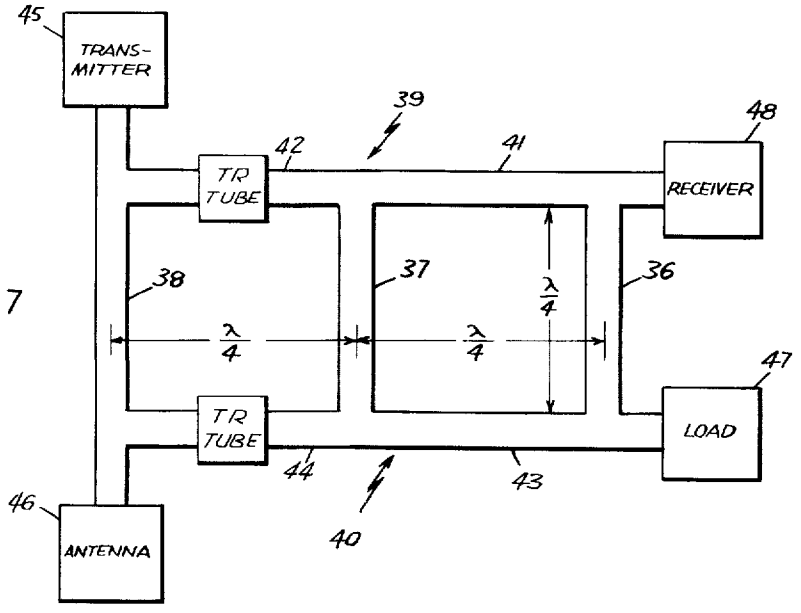

INVENTORS
JOHN REED
GERSHON J. WHEELER
BY Elmer J. Gorn
ATTORNEY

United States Patent Office 2,975,381 Patented Mar. 14, 1961

2,975,381

DUPLEXERS

John Reed, Belmont, and Gershon J. Wheeler, Newton Centre, Mass., assignors to Raytheon Company, a corporation of Delaware

Filed Feb. 21, 1957, Ser. No. 641,552

9 Claims. (Cl. 333—10)

This invention relates to an improved duplexer and more specifically to a duplexer that includes as a basic part a branched guide coupler arranged and adapted in a novel manner as disclosed herein.

In the past, branched guide couplers have been constructed wherein the impedance in each branch has been arranged to be proportional to the coefficients of binomial expansion in order to maintain high directivity. For example, a five branch coupler would have impedances in each slot or branch in the ratio of 1:4:6:4:1.

In this invention, there is disclosed a branched guide coupler of improved and novel design which may be constructed for either a coaxial line, strip transmission line or waveguide that does not follow the binomial expansion formula. In a paper entitled "A Method of Analysis of Symmetrical Four-Port Networks" by the inventors, published in the I.R.E. Transactions on Microwave Theory and Techniques, volume MTT–4, Number 4, October 1956, there is shown a complete mathematical analysis of this invention. By utilizing the improved branched guide coupler as disclosed herein there has been produced a new type of duplexer that consists of only a pair of TR tubes and at least a three-section branched guide coupler. In the art as practiced today duplexers are constructed of at least a first four-arm hybrid coupler connected to a pair of TR tubes which in turn is connected to a second four-arm hybrid coupler. Many forms of the aforementioned duplexers are in use today, their most important advantage being the elimination of the ATR tubes.

In this invention, a TR tube is placed in each main guide section between that branch which forms the guide for the transmission of power between the transmitter and the antenna. In operation the magnetron power will fire the TR tube, thereby effectively preventing power from being transmitted through the coupling, but rather allowing said transmitted power to be fed to the antenna. Since a load member is placed in the fourth arm of the coupler, which is on a diagonal from the transmitter, any leakage power from the transmitter would be coupled into the load as in a regular balanced duplexer. Upon reception of an echo from the transmitted pulses, the TR tubes would fire, and hence the full power of the echo pulse would be transmitted through the coupler to the receiver which is connected on the diagonal opposite the antenna, thereby effectively coupling all the received power into the receiver arm. The branched guide coupler having at least three branches is used, since it has been discovered that said coupler will couple power incident on any arm into the arm diagonally opposite it. Thus, all power incident on the first arm will go into the fourth arm, and all power incident on the second arm will go into the third arm.

The duplexer, as described herein, has certain size advantages in the longer wavelengths of the microwave spectrum. For example, an L-band duplexer with hybrids would be about twelve inches wide, nine inches high, and about three feet long, whereas a duplexer as

described in this invention would be at most six inches long, three or four inches high, and about one foot wide, since the low power element could be in a coaxial line. These advantages in dimension would be even more pronounced at P band, thereby giving a price advantage and a reduction in the complications of construction and specifically those of the hybrid circuits. The coaxial components are simple to make, and further, the TR windows would be carrying only the full line power and not $\sqrt{2}$ times the line power, as is the case in the normal hybrid circuits as used today.

Further objects and advantages of this invention will be made more apparent as the description progresses, reference now being made to the accompanying drawings wherein:

Fig. 1 illustrates a branched guide coupler having four branches or slots;

Fig. 2 is a side view of the branched guide coupler illustrated in Fig. 1;

Fig. 3 is a line drawing of a two-section branched guide coupler;

Fig. 4 is a line drawing of a three-section branched guide coupler;

Fig. 5 is a three-section branched guide coupler similar to that illustrated in Fig. 4 showing how improved bandwidth is obtained by controlling impedance levels of the main guides;

Fig. 6 is a three-section branched guide coupler in coaxial line; and

Fig. 7 illustrates a duplexer utilizing a three-section branched guide coupler as an essential element.

Referring now to Figs. 1 and 2, there is shown a branched guide coupler **10** consisting of a first main waveguide **11** and a second main waveguide **12** connected together along their broad walls by means of a plurality of branched guides **13**, **14**, **15** and **16**. Main guide **11** forms part of a microwave transmission line and is structurally connected and electromagnetically coupled to the second waveguide **12** by means of branched guides **13**, **14**, **15** and **16**, which are relatively short and make T-junctions with the wider walls of the main and secondary guides **11** and **12**, the longitudinal axis of the component branched guides being co-planar. Each waveguide **11** and **12** may be rectangular in cross-section, as shown, and dimensioned to operate in the dominant (TE_{01}) mode in which the electric field vectors of the energy involved extend perpendicularly to the broad walls. In terms of the relative direction of the E-fields (electric fields) within the guides, each junction formed in the illustrated connection of waveguides may be termed an E-plane T. The impedances of the guides forming such a T are effectively in series, and for this reason, the interconnecting-branched guides may be termed series-branching guides. As will be noted from Figs. 1 and 2, the distance between inside connecting walls of waveguides **11** and **12** is a quarter wave length, as is the distance between center points of the interconnecting branch guide couplers **13**, **14**, **15** and **16**. The impedances of the branch guides are controlled by varying the distances between opposing walls of and in a similar manner the impedances of the main guides are controlled by varying the distance between opposing broad walls extending perpendicularly to the axis of the main guide. In this manner, it is possible to construct a coupler having any characteristic impedance in any arm of the guide. It has been discovered that, by controlling the independent characteristic impedances of the main guides and the branch guides, it is possible to control the coupling and directivity characteristics and bandwidth characteristics of the coupler.

Referring now to Fig. 3, there is shown a two-section branched guide coupler in coaxial line form having the

required parameters, which are that the distance between the main lines **17** and **18** is a quarter wave length apart, as is the distance between branched lines **19** and **20**. By assuming the characteristic admittance of the input line at point **21** to be $Y_0=1$, and the characteristic admittances in main lines **17** and **18** between the branched lines **19** and **20** to be $Y_0=b$, and further, that the characteristic admittances of lines **19** and **20** are both equal to a, it has been determined that the device will be matched and perfectly directed if $1+a^2=b^2$. Thus, the coupling into arm **22**, which is on a diagonal from input arm **21**, will be:

$$20 \log_{10} \sqrt{\frac{b^2-1}{b}} \tag{1}$$

For the special case where $a=1$ and $b=\sqrt{2}$, the device is a 3 db directional coupler since power fed into input **21** will divide equally between output arms **22** and **23**.

Referring now to Fig. 4, there is shown a three-section directional coupler in coaxial form having the same required one-quarter wave length spaced-apart distances, as shown in Fig. 2. It has been discovered that if three branch arms are used, it is not necessary to change the admittances of the main lines in order to achieve perfect match and directivity. For example, if the characteristic admittances of all the main lines is considered to be $Y_0=1$, and the characteristic admittances of the two outer branch guides **24** and **25** are $Y_0=c$, then it has been determined the perfect match will occur when

$$a=1-\sqrt{\frac{1-c^2}{c}} \tag{2}$$

and that coupling into the output arm, which is on a diagonal from the input arm, will be:

$$20 \log_{10} \frac{1+a^2}{2a} \tag{3}$$

It should be noted that when $a=c=1$, that the coupling is zero db which signifies there is no loss in power from the input to the diagonal output arm.

A broad band device in a three-arm branched guide coupler can be achieved when the characteristic admittances of the main lines are changed, as shown in Fig. 5, where the characteristic admittances of all the main lines are $Y_0=b$, and the input characteristic admittance is maintained equal to 1. For match and perfect directivity it has been discovered that the following condition must exist:

$$c=\frac{2ab^2}{1+a^2} \tag{4}$$

For this condition, coupling into the output arm, which is on a diagonal from the input arm, will be:

$$20 \log_{10} \frac{1+a^2}{2a} \tag{5}$$

This equation shows that for a 3 db coupler $a=\sqrt{2}-1$.

Considering now a unit signal entering input arm **26**, it can be shown that power division and directivity and match will be dependent on the parameters a, b, and c, and that condition for good match is:

$$b^2=\frac{c}{2a}(1+a^2) \tag{6}$$

As long as this condition holds true, the power will divide between output arms **27** and **28** and will be dependent only on a as follows:

$$\text{Power at } 27=\left(\frac{a^2-1}{a+1}\right)^2 \tag{7}$$

$$\text{Power at } 28=\left(\frac{2a}{a^2+1}\right)^2 \tag{8}$$

In order to construct a directional coupler having any desired coupling K, it is necessary that the following equation be satisfied:

$$4a^2=\frac{1-K}{K}(a^2-1)^2 \tag{9}$$

Since this equation has two values for a, for any desired coupling K, it has been found that if a value for a less than unity is used, the coupler will have high directivity and good match over a broader frequency band than if the higher value of a is used.

It has also been discovered that in a coupler with five or six cross arms, there could be a third different size for the center arms; however, if the center arms are all kept at the same value, then for the special case of equal power distribution (3 db coupler) in the two output arms, the admittances are indicated in the following table:

Table I

Number of Arms	a	c
3 arms *aca*	0.4141	0.7071
4 arms *acca*	0.2346	0.5412
5 arms *accca*	0.2088	0.3810
6 arms *acccca*	0.1464	0.3179

This table indicates that for the four arm waveguide directional coupler, illustrated in Figs. 1 and 2, the impedances of arms **13** and **16** illustrated therein will be equal and have a value of 0.2346 times the impedance of the input arm, and that the two center arms **14** and **15** will be equal and have a value of 0.5412 times the impedance of the input arm.

Referring now to Fig. 6, there is shown a three-section branched line coupler having branch arms **29**, **30** and **31**. The coupler illustrated in Fig. 6 must satisfy the basic requirement that the main lines **32** and **33** be spaced a quarter wave length apart, and further, that the spacing between the branched lines also be a quarter wave length. The impedance characteristics of either the main lines **32** and **33** or **34** and **35**, or any of the branched lines **29**, **30** or **31** can be controlled in a conventional way, which is to change the physical dimensions of the inner conductor with respect to the outer conductor, and, in this way, it is possible to obtain the same degree of coupling and directivity for any of the configurations disclosed in Figs. 1, 2, 3 and 4.

Referring now to Fig. 7, there is shown in three-section branched guide coupler consisting of branch guides **36**, **37** and **38** connecting main guides **39** and **40**. Main guide **39** is constructed of a first guide **41** and a second guide **42**, which contains a TR tube. In a similar manner, main guide **40** is constructed of a first guide **43** and a second guide **44** which contains a second TR tube. The spacing requirements between the main guides **39** and **40** are the same as those described previously, which is that the distance between said guides must be a quarter wave length, and also the distance between branch guides must be a quarter wave length long, as illustrated. Connected to the guide closest to the TR tube in guide **42** is a transmitter **45**, and connected closest to the TR tube in guide **44** is an antenna **46**. Located diagonally opposite transmitter **45** is a load device **47**, and located diagonally opposite antenna **46** is a receiver **48**. In actual operation, firing of a transmitted pulse from transmitter **45** will cause the TR tubes in guides **42** and **44** to fire, thereby preventing any energy from being propagated or fed back to the receiver **48** or load **47**. It is entirely conceivable that, due to low efficiencies of currently available TR tubes, a certain amount of leakage energy will be fed therethrough. In any event, energy that does couple from transmitter **45** will see a three-section branched guide coupler which will couple the energy into load **47**. Firing of the TR tubes will thereby cause the energy from said transmitter to be fed directly through

guide 38 to the antenna 42. Upon the receiving of an echo or incoming wave energy to antenna 46, the TR tubes will appear as matched lines, and therefore the energy from said antenna will see a three-section branched guide directional coupler which will therefore couple all the energy to receiver 48.

This completes the description of the particular embodiments of the invention illustrated herein. However, many modifications thereof will be apparent to persons skilled in the art without departing from the spirit and scope of this invention. Accordingly, it is desired that this invention not be limited by the particular details described herein, except as defined by the appended claims.

What is claimed is:

1. A directional coupler comprising a first energy path and a second energy path arranged and adapted to carry electromagnetic energy, said first and second paths spaced apart a distance substantially equal to an odd multiple of a quarter wave length at the operating frequency of said coupler, and three spaced-apart branch paths connecting said first and second energy paths, the lengths and the center-to-center spacing of said branch paths being substantially an odd multiple of a quarter wave length at the operating frequency of said coupler, and the impedance of said outer branch paths being equal to each other and less than the centrally located branch path.

2. A directional coupler comprising a first wave guide and a second wave guide arranged and adapted to carry electromagnetic energy, said first and second wave guides being substantially rectangular in cross-section and dimensioned to operate in a dominant mode, said first and second wave guides spaced apart a distance substantially equal to an odd multiple of a quarter wave length at the operating frequency of said coupler, and at least four spaced-apart branch wave guides connecting said first and second wave guides, each of said branch wave guides forming an E-plane junction with said first and second wave guides, the lengths and the center-to-center spacing of said branch wave guides being substantially an odd multiple of a quarter wave length at the operating frequency of said coupler, the centrally located branch wave guides having a greater distance between opposing broad walls perpendicular to the axis of said first and second wave guides, the lengths and the center-to-center branch wave guides to provide a broadband coupling of electromagnetic energy between said first and second wave guides.

3. A directional coupler comprising a first energy path and a second energy path arranged and adapted to carry electromagnetic energy, said first and second paths spaced apart a distance substantially equal to an odd multiple of a quarter wave length at the operating frequency of said coupler, and three spaced-apart branch paths connecting said first and second energy paths, the lengths and the center-to-center spacing of said branch paths being substantially an odd multiple of a quarter wave length at the operating frequency of said coupler, and the admittance of said center branch path being greater than that of either of said outer branch paths to provide a reflectionless coupling between said first and second energy paths.

4. A directional coupler comprising a first energy path and a second energy path arranged and adapted to carry electromagnetic energy, said first and second paths spaced apart a distance substantially equal to an odd multiple of a quarter wave length at the operating frequency of said coupler, and three spaced-apart branch paths connecting said first and second energy paths, the lengths and center-to-center spacing of said branch paths being substantially an odd multiple of a quarter wave length at the operating frequency of said coupler, the magnitude of the coupling from the input to the output arm in the ratio of

$$20 \log_{10} \frac{1+a^2}{2a}$$

and for perfect match the following relationship should exist:

$$a=1-\sqrt{\frac{1-c^2}{c}}$$

where a is the characteristic admittance for shunt junctions and impedance for series junctions of the both outer branch paths and c is the characteristic admittance for shunt junctions and impedance for series junctions of the center branch paths, normalized to the admittance of the input line, the admittance of said branch paths being proportional to the values a and c.

5. A directional coupler comprising a first energy path and a second energy path arranged and adapted to carry electromagnetic energy, said first and second paths spaced apart a distance substantially equal to an odd multiple of a quarter wave length at the operating frequency of said coupler, and three spaced-apart branch paths connecting said first and second energy paths, the lengths and the center-to-center spacing of said branch paths being substantially an odd multiple of a quarter wave length at the operating frequency of said coupler, the magnitude of the coupling from the input to the output arm in the ratio of

$$20 \log_{10} \frac{1+a^2}{2a}$$

and for perfect match the following relationship should exist:

$$c=\frac{2ab^2}{1+a^2}$$

where a is the characteristic admittance for shunt junctions and impedance for series junctions of the both outer branch paths, and b is the characteristic admittance for shunt junctions and impedance for series junctions of the main energy paths existing between each of said branch paths, and c is the characteristic admittance for shunt junctions and impedance for series junctions of the center branch path, normalized to the impedance of the input line, the impedance of said branch paths being proportional to the values a and c.

6. A directional coupler comprising a first energy path and a second energy path arranged and adapted to carry electromagnetic energy, means for generating wave energy connected at one end of said first energy path and means for receiving wave energy connected at the other end of said first energy path, means for radiating said generated wave energy connected at one end of said second energy path and a dissipative load absorbing device connected at the other end of said second energy path, said first and second paths spaced apart a distance substantially equal to an odd multiple of a quarter wave length at the operating frequency of said coupler, three spaced-apart branch paths connecting said first and second energy paths, the lengths and the center-to-center spacing of said branch paths being substantially an odd multiple of a quarter wave length at the operating frequency of said coupler, the impedance of said outermost branch paths being equal to each other and less than the impedance of the centrally located branch path, a first TR tube in said first main path adjacent to said branch path nearest to said generating means and a second TR tube in said second main path adjacent to said branch path closest to said radiating means.

7. A directional coupler comprising a first energy path and a second energy path arranged and adapted to carry electromagnetic energy, means for generating wave energy connected at one end of said first energy path and means for receiving wave energy connected at the other end of said first energy path, means for radiating said generated wave energy connected at one end of said

second energy path and a dissipative load absorbing device connected at the other end of said second energy path, said first and second paths spaced apart a distance substantially equal to an odd multiple of a quarter wave length at the operating frequency of said coupler, three spaced-apart branch paths connecting said first and second energy paths, the lengths and the center-to-center spacing of said branch paths being substantially an odd multiple of a quarter wave length at the operating frequency of said coupler, a first TR tube in said first main path adjacent to said branch path nearest to said generating means and a second TR tube in said second main path adjacent to the branch path nearest to said radiating means, and where

$$a=b=c=1$$

where a is the characteristic admittance for shunt junctions and impedance for series junctions of the both outer branch paths, and b is the characteristic admittance for shunt junctions and impedance for series junctions of the main energy paths existing between each of said branch paths, and c is the characteristic admittance for shunt junctions and impedance for series junctions of the center branch path, normalized to the admittance of the output line.

8. A three db directional coupler comprising a first energy path and a second energy path arranged and adapted to carry electromagnetic energy, said first and second paths spaced apart a distance substantially equal to an odd multiple of a quarter wave length at the operating frequency of said coupler, and three spaced-apart branch paths connecting said first and second energy paths, the lengths and the center-to-center spacings of said branch paths being substantially an odd multiple of a quarter wave length at the operating frequency of said coupler, the characteristic admittance for shunt junctions of both the outer branch paths being equal and of magnitude of substantially 0.4141 and the characteristic admittance for shunt junctions of the center branch paths having the magnitude of substantially 0.07071.

9. A three db directional coupler comprising a first energy path and a second energy path arranged and adapted to carry electromagnetic energy, said first and second paths spaced apart a distance substantially equal to an odd multiple of a quarter wave length at the operating frequency of said coupler, and four spaced-apart branch paths connecting said first and second energy paths, the lengths and the center-to-center spacing of said branch paths being substantially an odd multiple of a quarter wave length at the operating frequency of said coupler, the characteristic admittance for shunt junctions of both the outer branch paths being equal and the characteristic admittance for shunt junctions of the center branch paths being of greater magnitude than that of the outer branch paths.

References Cited in the file of this patent

UNITED STATES PATENTS

2,512,673	Page	June 27, 1950
2,558,385	Purcell	June 26, 1951
2,586,993	Riblet	Feb. 26, 1952
2,640,915	Sichak	June 2, 1953
2,701,340	Miller	Feb. 1, 1955

UNITED STATES PATENT OFFICE

CERTIFICATION OF CORRECTION

Patent No. 2,975,381 March 14, 1961

John Reed et al.

It is hereby certified that error appears in the above numbered patent requiring correction and that the said Letters Patent should read as corrected below.

Column 3, line 29, after "determined" for "the" read -- that --; column 5, line 45, for ", the lengths and the center-to-center" read -- thereof than either of the outside --.

Signed and sealed this 1st day of August 1961.

(SEAL)
Attest:

ERNEST W. SWIDER
Attesting Officer

DAVID L. LADD
Commissioner of Patents

UNITED STATES PATENT OFFICE

CERTIFICATION OF CORRECTION

Patent No. 2,975,381 March 14, 1961

John Reed et al.

It is hereby certified that error appears in the above numbered patent requiring correction and that the said Letters Patent should read as corrected below.

Column 3, line 29, after "determined" for "the" read -- that --; column 5, line 45, for ", the lengths and the center-to-center" read -- thereof than either of the outside --.

Signed and sealed this 1st day of August 1961.

(SEAL)
Attest:

ERNEST W. SWIDER
Attesting Officer

DAVID L. LADD
Commissioner of Patents