H. M. BARBER.

INKING MECHANISM FOR PRINTING PRESSES.

APPLICATION FILED JAN. 28, 1914.

1,284,212. Patented Nov. 12, 1918.

2 SHEETS—SHEET 1.

Fig. 1.

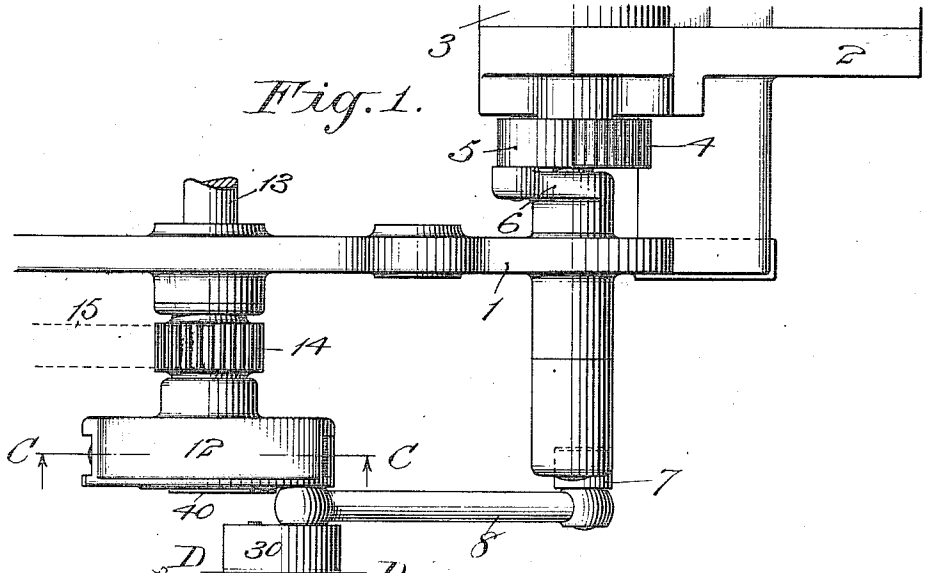

Fig. 2.

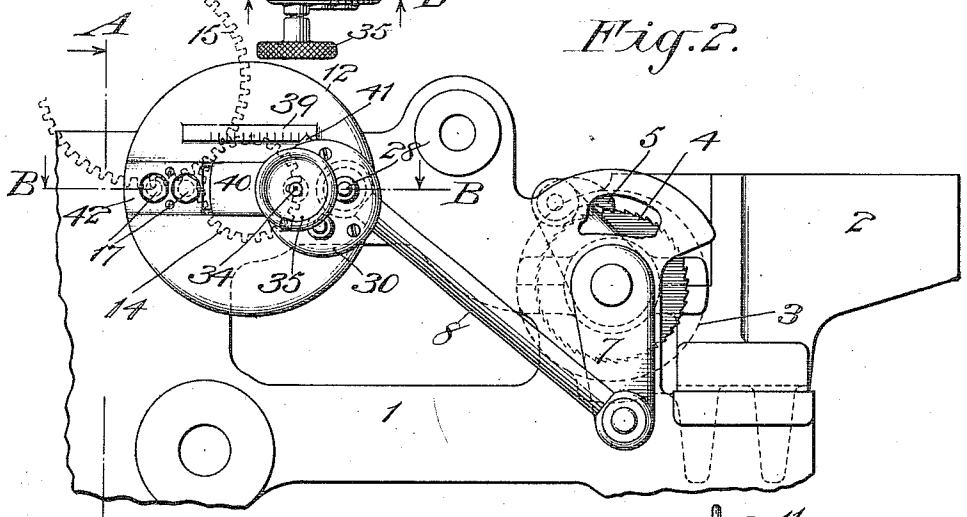

Fig. 3.

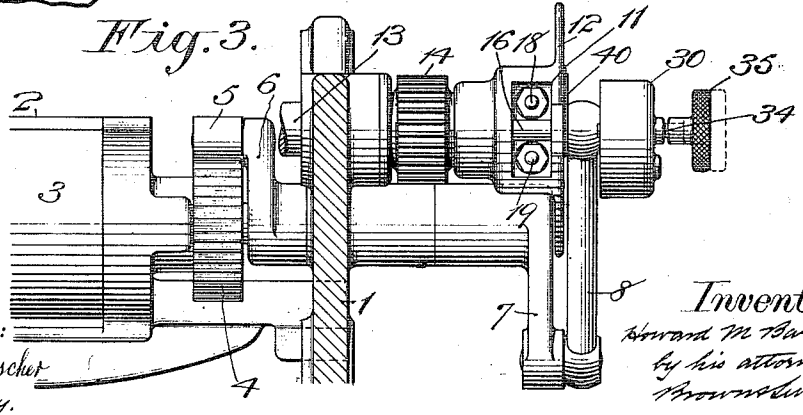

Witnesses:
Harry J. Fleischer
F. George Barry.

Inventor:
Howard M Barber
by his attorneys
Brownell & Brownell

H. M. BARBER.

INKING MECHANISM FOR PRINTING PRESSES.

APPLICATION FILED JAN. 28, 1914.

1,284,212.

Patented Nov. 12, 1918.

2 SHEETS—SHEET 2.

Fig. 4.

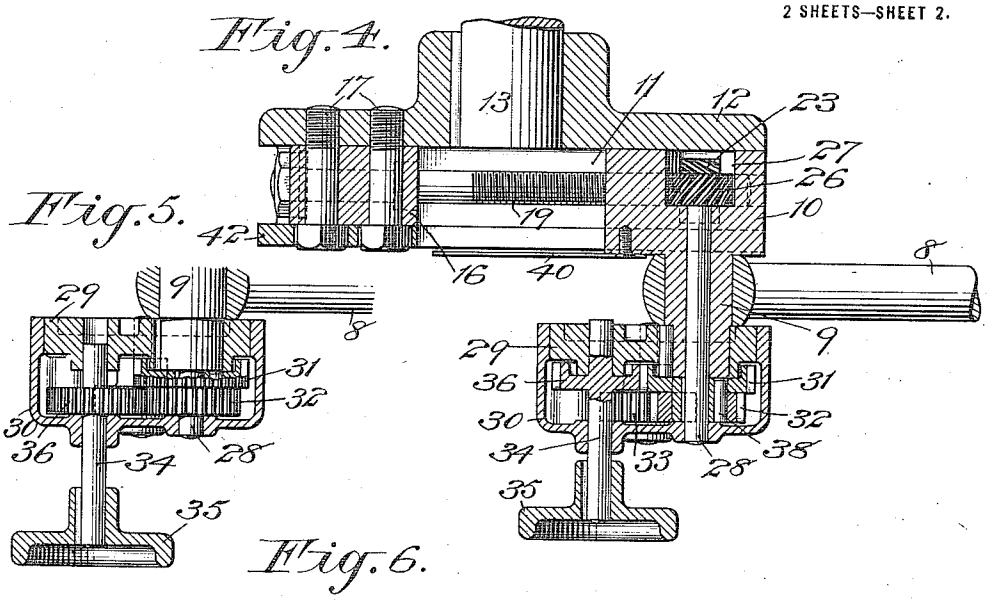

Fig. 5.

Fig. 6.

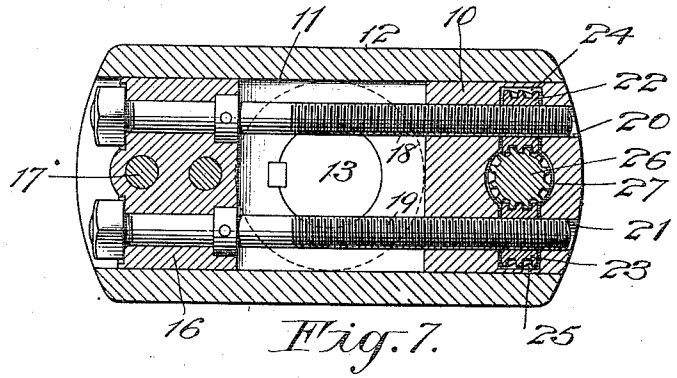

Fig. 7.

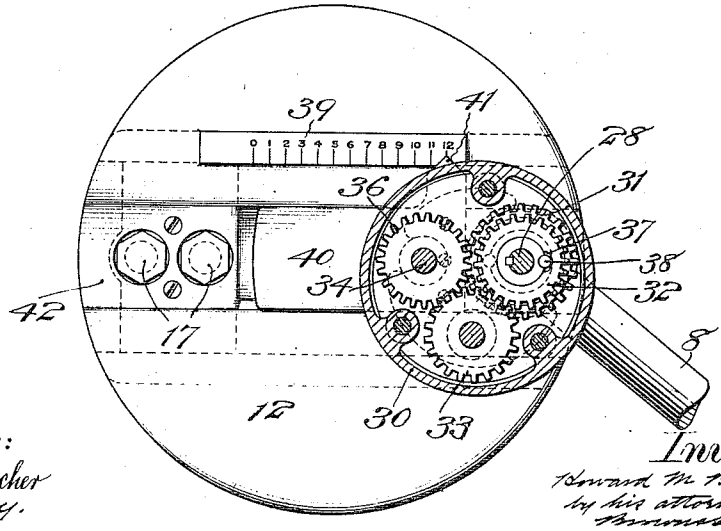

Witnesses:
Harry J. Fleischer
J. George Barry.

Inventor:
Howard M. Barber
by his attorneys
Brown & Seward

UNITED STATES PATENT OFFICE.

HOWARD M. BARBER, OF STONINGTON, CONNECTICUT, ASSIGNOR, BY MESNE ASSIGNMENTS, TO C. B. COTTRELL & SONS COMPANY, OF NEW YORK, N. Y., A CORPORATION OF DELAWARE.

INKING MECHANISM FOR PRINTING-PRESSES.

1,284,212. Specification of Letters Patent. Patented Nov. 12, 1918.

Application filed January 28, 1914. Serial No. 815,001.

To all whom it may concern:

Be it known that I, HOWARD M. BARBER, a citizen of the United States, and resident of Stonington, in the county of New London and State of Connecticut, have invented a new and useful Improvement in Inking Mechanism for Printing-Presses, of which the following is a specification.

In the operation of printing presses, it is necessary to frequently vary the amount of ink being fed owing to varying climatic and temperature conditions and requirements in the printed product.

Heretofore, in making adjustments for the purpose of adjusting the feed of the fountain roll to cause it to transfer more or less ink, the trouble has been that for any of the intermediate adjustments of the step by step movement of the roll, the roll would be started abruptly when using the usual cam or crank throw, owing to the fact that only a part of the throw would be utilized for imparting the advance movement to the roll. This abrupt starting of the roll not only subjected the device to undue strain, but frequently caused the fountain roll to spring and thereby interfere with the proper supply of ink.

The object of this invention is to provide means for adjusting the feed of the fountain roll that can be operated while the press is running and in which the fountain roll is started slowly on each of its movements, instead of abruptly, this being accomplished by utilizing the full throw of the crank which controls the movement of the fountain roll, irrespective of the lengths of the steps of the fountain roll. This invention more particularly comprises a fountain roll feed adjustment in which there is no lost motion connection between the driving crank and the pawl which operates the ratchet on the fountain roll.

A practical embodiment of my invention is represented in the accompanying drawings, in which—

Figure 1 represents so much of an inking mechanism in top plan with my invention applied thereto as will give a clear understanding of the same,

Fig. 2 is an end view of the parts shown in Fig. 1,

Fig. 3 is a section taken in the plane of the line A—A of Fig. 2,

Fig. 4 is an enlarged section taken in the plane of the line B—B of Fig. 2 with the crank throw adjusting device in one of its positions,

Fig. 5 is a detail similar section with the crank throw adjusting device in the other of its positions,

Fig. 6 is an enlarged section taken in the plane of the line C—C of Fig. 1, and

Fig. 7 is an enlarged section taken in the plane of the line D—D of Fig. 1.

The side frame of the printing press is denoted by 1, the ink fountain by 2, the fountain roll by 3, and its ratchet by 4. The usual pawl 5 is carried by the arm 6 of a rock lever mounted concentric with the axis of the fountain roll, which rock lever has its other arm 7 attached to one end of the connecting rod 8, the other end of which rod is pivoted on the hollow wrist pin 9 projecting from the block 10 which is radially adjustable in the slot 11 in the face of the crank 12. The shaft 13 of the crank is suitably mounted in the side frame 1 and is rotated at the desired speed from any suitable source, not shown, through the gears 14, 15.

The rotary movement of the crank 12 serves to impart a step by step rotary movement to the ink fountain roll 3 through the pawl and ratchet connection 5, 4; the amount of movement in each step being controlled by the distance of the point of connection between the crank 12 and rod 9 from the axis of the shaft 13.

I will now describe the construction and operation of the device for adjusting this point of connection without interfering with the operation of the parts: A stationary filling piece 16 is secured to the crank 12 within the slot 11 at one side of the axis by means of bolts 17. A pair of parallel stationary screws 18, 19, are secured to the filling piece 16 and extend along the slot 11 into holes 20, 21, through the sliding block 10 upon opposite sides of the longitudinal central axis of the hollow wrist pin 9.

Traveling nuts 22, 23, threaded on the screws 18, 19, are located in recesses 24, 25, in the block 10, which nuts have exterior spiral threaded portions in engagement with the spiral gear 26 located in a recess 27 in the block 10 and fixed to the inner end of a shaft 28 which extends axially through the hollow wrist pin 9.

A reverse gear casing comprising inner and outer members 29, 30, is keyed to the outer end of the wrist pin 9, within which casing the outer end of the shaft 28 has fast thereon larger and smaller gears 31, 32, the smaller gear 32 being always in mesh with an idler gear 33 mounted within the casing.

A shaft 34 is slidably and rotatably mounted in the gear casing and is provided with a suitable handle 35 for its manipulation as will hereinafter appear.

A gear 36 is fast on this shaft 34 within the casing, which gear may be moved into and out of mesh with the larger gear 31 fast on the shaft 28 and into and out of mesh with the idler gear 33 which is at all times in mesh with the smaller gear 32 fast on the shaft 28. When the gear 36 is in mesh with either the gear 31 or gear 33 and is free to rotate, the shaft 28 will not rotate. When the gear 36 is held against rotation while in mesh with the gear 31, the shaft 28 will be rotated in a direction to cause the block 10 to move inwardly toward the axis of the crank, to decrease its throw through the spiral gear 26 and nuts 22, 23. When the gear 36 is held against rotation while in mesh with the idler gear 33, the shaft 28 will be rotated in a direction to cause the block 10 to move outwardly away from the axis of the crank to increase its throw.

The gear 32 has a slight rotative movement on the hub of the gear 31 by providing the gear 32 with a wide key-way 37 for the key 38. This will insure the ready shifting of the gear 36 into and out of mesh with the gear 33 which is always in mesh with the gear 32.

The crank 10 is provided with a scale 39 along the slot 11 corresponding to the range of adjustment for the throw of the pawl 5 and a plate 40 secured to the block 10 is provided with a pointer 41 coacting with said scale, said plate acting as a cover for the slot 11 in the crank. A guard 42 is secured to the filling piece 16, within which guard the heads of the bolts 17 are countersunk.

I will proceed to describe the operation of my invention and assume the parts to be in the position shown in Figs. 1, 2, 3, 4, 6 and 7, where the throw of the crank is at its maximum adjustment for imparting the maximum step by step movement of the ink fountain roll.

To produce a smaller movement of the pawl and thereby the fountain roll to reduce the feed of the fountain, the handle 35 is grasped and the gear 36 is held against rotation in mesh with the larger gear 31. The rotation of the crank shaft will cause the shaft 28 and its gear 26 to rotate thereby rotating the traveling nuts 22, 23, and causing the block 10 to be moved inwardly toward the center of the crank. When the desired adjustment has been reached, the handle and its gear are released and the parts will be maintained in such adjustment until a new adjustment is required.

If at any time it is desired to increase the feed of the fountain by increasing the lengths of the steps of the fountain roll, the handle 35 is grasped and the gear 36 is moved out of its engagement with the gear 31 and into its engagement with the gear 33 and is held in such position against rotation. This will cause the shaft 28 and its gear 26 to rotate in a direction to cause the traveling nuts 22, 23, to move the block outwardly away from the center of the crank. When the desired adjustment has been reached, the handle and its gear are released and the parts will be maintained in such adjustment.

It will be seen from the above description that the adjustment for the fountain feed may be accomplished without interfering with the operation of the fountain roll and in a very rapid, simple and convenient manner.

It will also be seen that by connecting the pawl carrying lever directly to the crank rod, the full throw of the crank is always utilized for moving the pawl. This arrangement will cause the pawl to start very slowly as the rod swings past center thus starting the fountain roll very slowly instead of abruptly as heretofore and preventing any overstrain thereon which would cause it to spring and feed the ink unevenly.

It is obvious that various changes might be resorted to in the form, construction and operation of the several parts without departing from the spirit and scope of my invention; hence I do not wish to limit myself strictly to the structure herein set forth, but

What I claim is:—

1. A roll and means including a crank and its driving connection with the roll for rotating it step by step, and manually controlled means for varying the throw of the crank while rotating to vary the lengths of the steps comprising a wrist pin block and a device carried by the block for moving it toward and away from the center of the crank.

2. A roll and means including a crank and its driving connection with the roll for rotating it step by step, and manually controlled means for varying the throw of the crank while rotating to vary the lengths of the steps, comprising a wrist pin block and a reverse gear carried by the block for moving it toward and away from the center of the crank.

3. A roll and means including a crank and

its driving connection with the roll for rotating it step by step and manually controlled means for varying the throw of the crank while rotating to vary the lengths of the steps, comprising a wrist pin block having a traveling nut and screw connection with the crank and a device carried by the block arranged, when held to actuate said connection between the block and crank, to move the block toward or away from the center of the crank and when released to maintain the block in its adjusted position.

4. A roll and means including a crank and its driving connection with the roll for rotating it step by step and manually controlled means for varying the throw of the crank while rotating to vary the lengths of the steps, comprising a wrist pin block having a traveling nut and screw connection with the crank and a reverse gear carried by the block arranged, when held to actuate said connection between the block and crank, to move the block toward or away from the center of the crank and when released to maintain the block in its adjusted position.

5. A roll and means including a crank and its driving connection with the roll for rotating it step by step and manually controlled means for varying the throw of the crank while rotating to vary the lengths of the steps, comprising a wrist pin block having a traveling nut and screw connection with the crank, and a reverse gear carried by the block including a shifting gear arranged, when held against rotation, to actuate the said connection between the block and crank to move the block toward or away from the center of the crank and when released to maintain the block in its adjusted position.

6. A crank and means for varying the throw of the crank comprising a wrist pin, its block having a traveling nut and screw connection with the crank, a casing fixed to the wrist pin, a shaft passing axially through the wrist pin and geared to said traveling nut, larger and smaller gears fixed to said shaft within said casing, an idler gear meshing with said smaller gear and a manually operated gear movable into and out of engagement with either the smaller gear or the idler gear.

7. A crank and means for varying the throw of the crank comprising a wrist pin, its block having a double traveling nut and screw connection with the crank, a casing fixed to the wrist pin, a shaft passing axially through the wrist pin and geared to said traveling nuts, larger and smaller gears fixed to said shaft within said casing, an idler gear meshing with said smaller gear and a manually operated gear movable into and out of engagement with either the smaller gear or the idler gear.

In testimony that I claim the foregoing as my invention, I have signed my name in presence of two witnesses, this twenty sixth day of January, A. D. 1914.

HOWARD M. BARBER.

Witnesses:
A. R. STILLMAN,
E. M. GRANT.