AU9472490

(12) PATENT ABRIDGMENT (11) Document No. AU-B-72490/94
(19) AUSTRALIAN PATENT OFFICE (10) Acceptance No. 688776

(54) Title
METHOD AND APPARATUS FOR SEALING IMPLANTABLE, MEMBRANE ENCAPSULATION DEVICES

International Patent Classification(s)
(51)[6] **A61M 031/00**

(21) Application No. : **72490/94** (22) Application Date : **22.06.94**

(87) PCT Publication Number : **WO95/01203**

(30) Priority Data

(31) Number	(32) Date	(33) Country
082407	**23.06.93**	**US UNITED STATES OF AMERICA**

(43) Publication Date : **24.01.95**

(44) Publication Date of Accepted Application : **19.03.98**

(71) Applicant(s)
BROWN UNIVERSITY RESEARCH FOUNDATION

(72) Inventor(s)
JOHN F MILLS; EDWARD J DOHERTY; TYRONE F HAZLETT; KEITH E DIONNE; NICHOLAS F WARNER; BRIAN M CAIN; DAVID H REIN

(74) Attorney or Agent
DAVIES COLLISON CAVE , 1 Little Collins Street, MELBOURNE VIC 3000

(56) Prior Art Documents
US 5182111
US 5158881
US 4402694

(57) Claim

1. A sealed, implantable encapsulation device for providing a biologically active product or function to an individual, said encapsulation device comprising:

a permselective, porous membrane shaped so as to form a cell-impervious encapsulating enclosure including an exterior surface, an interior surface and an opening, said interior surface substantially defining a storage cavity and said opening providing open communication between said storage cavity and the exterior of said enclosure;

a non-permeable, non-porous fitting disposed within or about said opening so as to make a substantially cell-tight dry seal between said fitting and said enclosure, said fitting providing a cell-tight closure of said opening but further including an access bore therethrough providing open communication between said storage cavity and the exterior of said enclosure, dimensioned so as to permit introduction therethrough of living cells into said storage cavity;

living cells disposed in said storage cavity and capable of secreting a biologically active product or of providing a selected biological function to an individual after implantation, said membrane permitting passage therethrough of substances provided by said cells and required to provide said biological product or function; and

. . ./2

a non-permeable, non-porous plug member cooperating with the access bore of said fitting to form a cell-tight seal with said fitting to seal said access bore.

PCT

ANNOUNCEMENT OF THE LATER PUBLICATION OF INTERNATIONAL SEARCH REPORTS

724 90/94

INTERNATIONAL APPLICATION PUBLISHED UNDER THE PATENT COOPERATION TREATY (PCT)

(51) International Patent Classification 6 : A61M 31/00 | A3

(11) International Publication Number: WO 95/01203

(43) International Publication Date: 12 January 1995 (12.01.95)

(21) International Application Number: PCT/US94/07015

(22) International Filing Date: 22 June 1994 (22.06.94)

(30) Priority Data:
08/082,407 23 June 1993 (23.06.93) US

688176

(60) Parent Application or Grant
(63) Related by Continuation
US 08/082,407 (CIP)
Filed on 23 June 1993 (23.06.93)

(71) Applicant (*for all designated States except US*): ~~CYTOTHERAPEUTICS, INC. [US/US]; Two Richmond Square, Providence, RI 02906 (US).~~ Brown University Research Foundation 42 Charlesfield Street, Providence, Rhode Island. U.S.A. 02906

(72) Inventors; and

(75) Inventors/Applicants (*for US only*): MILLS, John, F. [US/US]; 251 Ministrial Road, Wakefield, RI 02879 (US). DOHERTY, Edward, J. [US/US]; 10 Nathan Road, Mansfield, MA 02048 (US). HAZLETT, Tyrone, F. [US/US]; 14 Giblin Lane, Coventry, RI 02816 (US). DIONNE, Keith, E. [US/US]; 35 Fairfield Street, Rehoboth, MA 02769 (US). WARNER, Nicholas, F. [US/US]; 296 Concord Avenue, Belmont, MA 02178 (US). CAIN, Brian, M. [US/US]; 48 Irving Street, Everett, MA 02149 (US). REIN, David, H. [US/US]; 60 East Manning Street, Providence, RI 02906 (US).

(74) Agents: LOUIE, Michael, L. et al.; Flehr, Hohbach, Test, Albritton & Herbert, Suite 3400, 4 Embarcadero Center, San Francisco, CA 94111-4187 (US).

(81) Designated States: AT, AU, BB, BG, BR, BY, CA, CH, CN, CZ, DE, DK, ES, FI, GB, GE, HU, JP, KE, KG, KP, KR, KZ, LK, LU, LV, MD, MG, MN, MW, NL, NO, NZ, PL, PT, RO, RU, SD, SE, SI, SK, TJ, TT, UA, US, UZ, VN, European patent (AT, BE, CH, DE, DK, ES, FR, GB, GR, IE, IT, LU, MC, NL, PT, SE), OAPI patent (BF, BJ, CF, CG, CI, CM, GA, GN, ML, MR, NE, SN, TD, TG).

Published

With international search report.

Before the expiration of the time limit for amending the claims and to be republished in the event of the receipt of amendments.

(88) Date of publication of the international search report:
16 February 1995 (16.02.95)

AUSTRALIAN SEC. 104 PATENT OFFICE

(54) Title: IMPLANTABLE MEMBRANE ENCAPSULATION APPARATUS

(57) Abstract

A sealed, implantable, encapsulation device (20) for diffusing a biologically active product or function to an individual which includes a substantially non-porous fitting (32) including an inner surface (33) defining an access port (34). A permselective, porous, membrane (21), having an interior surface (22), cooperates with the fitting inner surface (33) to form a storage cavity (23) therebetween. The membrane interior surface (22) is in substantially cell-tight dry sealing engagement with fitting (32) to seal cavity (23). Living cells (24) are disposed in the cavity (23) which are capable of secreting the biologically active product to an individual. The membrane (21) is of a material capable of permitting the passage of substances between the individual and cells required to provide the biological product or function. A plug member (35) is positioned in the access port (34) and seated in cell-tight sealing engagement with the fitting inner surface (33). A method for sealing the implantable encapsulation device (20) is also provided.

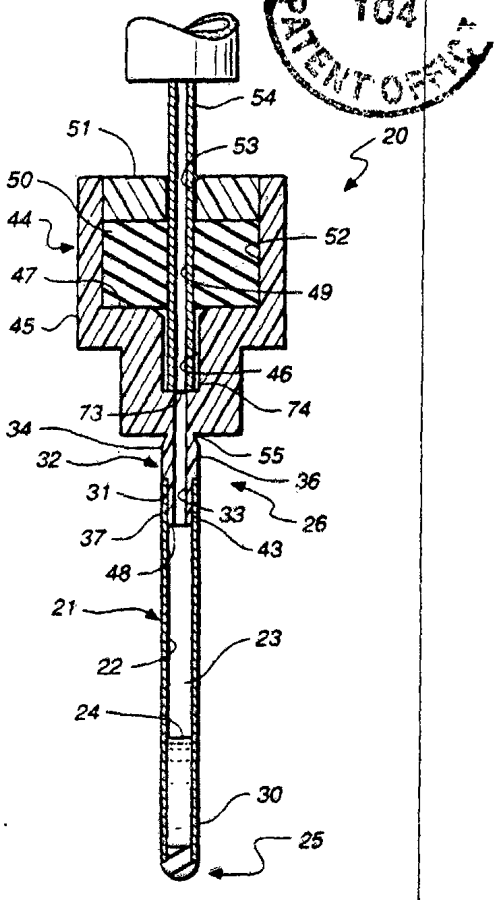

METHOD AND APPARATUS FOR SEALING IMPLANTABLE, MEMBRANE ENCAPSULATION DEVICES

TECHNICAL FIELD

The present invention relates, generally, to implantable, membrane encapsulation apparatus capable of infusing therapeutic agents and, more particularly, to methods and devices for sealing hollow membrane cell encapsulation apparatus.

BACKGROUND ART

The encapsulation of viable cells which produce biologically-active factors has experienced substantial growth and increased interest in recent years. These special implantable, encapsulating devices are capable of providing a vast array of biological functions and services. For example, biologically active therapeutic agents of living cells, such as enzymes, neurotransmitters, blood coagulation factors, lymphokines, cytokines, nerve growth factors, trophic factors such as neurotrophic factor, hormones and angiogenesis factors, may be continuously diffused into a host for therapeutic purposes. In other instances, these agents may be employed for diagnostic purposes. For example, the implanted cells could react to excrete some measurable product or the like in response to a particular physiological condition.

After considerable research, two general encapsulation approaches have evolved. One approach involves the manufacture of an encapsulating membrane around the viable cell cultures. Usually, microcapsules or microspheres, encapsulating a microscopic droplet of cell solution, are provided which are integral structures not generally requiring post-production sealing. This approach is disclosed in U.S. Patent Nos.: 4,353,888 to Sefton and 4,352,833 to Lim; and European Patent No. 188,309 to Rha. One problem with these devices is that they are limited in volume, difficult to manufacture, implant and retrieve, and often suffer from limited biocompatibility.

Another encapsulation approach involves the use of macroencapsulation devices defining a cell suspension reservoir or lumen formed to hold the cell culture solution therein. These devices provide a much greater cell solution volume and are substantially easier to handle in both implantation and retrieval. One technique of fabricating a macroencapsulating device involves the coextrusion of an aqueous cell culture and a polymeric solution which forms a tubular extrudate having a polymeric outer coating encapsulating the viable cell solution. In some instances, the cell culture is fully encapsulated during the integral fabrication thereof, while in other instances, post-production sealing of the lumen is required. Examples ~~Typical~~ of these coextrusion devices may be found in U.S. Patent No. 5,158,881 to Aebischer et al.

Another macrocapsule fabrication technique includes providing an elongated hollow fiber macroencapsulation structure which is subsequently loaded with the implantable cell cultures. In this approach, the hollow fiber macrocapsule is fabricated with one or more openings to the cell solution reservoir or lumen

AUSTRALIAN PATENT OFFICE

for cell loading, which subsequently must be sealed to fully encapsulate the cell cultures. ~~Typical~~ Examples of these devices may be found in U.S. Patent No. 3,615,024 to Michaels.

Flatsheet encapsulation devices are also employed which generally include two flatsheet membranes encapsulating the cells therebetween to form an encapsulating sandwich. Both the cylindrical hollow fiber configuration and the flatsheet configuration provide a more favorable ratio (as compared to a sphere) between the surface area of the membrane and the volume of encapsulated tissue. In macrocapsules of these shapes, as the volume of the device is increased in order to contain greater amounts of encapsulated tissue, the corresponding surface area of the membrane increases more proportionately such that the diffusional transport of nutrients and products for increased amounts of tissue can be accommodated by increasing the surface area without unwieldy increases in total vehicle size.

These encapsulating membrane devices are generally comprised of thermoplastic polymer or copolymer membranes which exhibit characteristics of water insolubility and biocompatibility. This membrane material must be permselective to select therapeutic agents and cell nutrients, yet be impermeable to the cells producing those agents. Upon deposition or loading of the culture solution in the lumen of the hollow fiber, moisture infiltrates throughout the membrane and becomestrapped in the pores. Accordingly, the inner surface wall of the fiber defining the opening into the lumen becomes "wet" regardless of whether or not there has been direct contact with any of the aqueous cell solution. Hence, "wet" sealing techniques must be applied to seal the loading

AUSTRALIAN PATENT OFFICE

openings. The nature of the pores are such that moisture is drawn in by capillary action. In the case of narrow diameter fiber devices, capillary action within the fiber lumen further serves to distribute water and contaminants throughout the length of the fiber.

Traditional approaches to wet sealing thermoplastic encapsulation devices include the employment of polymer adhesives and/or crimping, knotting and heat sealing. Examples of these wet sealing techniques may be found in the following publications: J. Altman et al., "Successful Pancreatic Xenografts Using Semipermeable Membrane", 5 *Artificial Organs (Suppl.)* 776 (1981) (Polyvinylchloride acrylic XM50 copolymer tubing biocompatible epoxy or cyacrylate glue); J. Altman et al., "Long-Term Plasma Glucose Normalization in Experimental Diabetic Rats With Macroencapsulated Implants of Benign Human Insulinomas", 35 *Diabetes* 625, (1986) (poly(acrylonitrile-co-vinyl-chloride) (PAN/PVC) copolymer glue in solvent); B. Dupuy et al., "In Situ Polymerization of a Microencapsulating Medium Round Living Cells", 22 *J. Biomed. Materials Res.* 1061 (1988) (Photopolymerization of membranes around cells): W. Hymer et al., "Pituitary Hollow fiber Units In Vivo and In Vitro", 32 *Neuroendocrinology* 33 9 (1981) (PAN/PVC fibers syringe loaded, crimping with heated forceps); H. Iwata et al., "The Use of Photocrosslinkable Polyvinyl Alcohol in the Immunoisolation of Pancreatic Islets", 22 *Transplant Proceedings* 797 (April 1990) (Production of encapsulated cells using photocrosslinkable hydrogel); Y. Kojima et al., "Xenogeneic Pancreatic Islet Transplantation Using a Millipore Diffusion Chamber", 19 *Transplant Proceedings* 981 (February 1987) (Millipore MF cement); P. Lamberton et al., "Use of Semipermeable Polyurethane Hollow Fibers for Pituitary Organ Culture", 24 *In vitro*

Cellular & Developmental Biology 500 (June 1988); C. Lum et al., "Intraperitoneal Nucleopore Chambers: a Murine Model for Allograft Rejection", 20 *Transplant Proceedings* 173 (April 1988) (Nucleopore membranes attached with silicone sealant; Millipore MF cement); S. Ronel et al., "Macroporous Hydrogel Membranes for a Hybrid Artificial Pancreas", 17 *J. Biomed. Materials Res.* 855 (1983) (Pressure/heat sealing of hydrogel encapsulation devices); N. Theodorou et al., "Problems in the Use of Polycarbonate Diffusion Chambers for Syngeneic Pancreatic Islet Transplantation in Rats", 18 *Diabetologia* 313 (1980) (Polycarbonate filters sealed with polyacrylic cement); F. Wong et al., "Effects of Thymus Enclosed in Millipore Diffusion Envelopes on Thymectomized Hamsters", 28 *Blood* 40 (1966); and G. Zondervan et al., "Design of a Polyurethane Membrane for the Encapsulation of Islets of Langerhans", 13 *Biomaterials* 136 (1992) (Polyurethane tubing sealed by knotting).

While these conventional methods of "wet" sealing may be adequate for laboratory experimentation or for short-term usage, their ~~long-term~~ long-term performance has often been inconsistent or unreliable. Potentially, these devices may be implanted in their host for months or years. Due to the nature of the fiber membrane material, to be discussed henceforth, the seal is often breached following implantation. This problem occurs on a consistent basis even when the method of sealing involves the same polymer solvent pair that was used to manufacture the encapsulating device.

Because of the porous nature of the membrane fiber material, moisture, cells, protein, polymers or the like contained in the cell culture solution become trapped in the pores of the membrane. As mentioned, the inner surface wall of the fiber defining the

AUSTRALIAN PATENT OFFICE

opening into the lumen becomes "wet" regardless of whether there is direct contact with the aqueous cell solution. Most common adhesives for this application, e.g., urethanes or thermoplastic adhesives, such as a PAN/PVC dissolved in the water-miscible solvent dimethylsulfoxide (DMSO), require relatively dry membranes to form a suitable seal and bond. In one instance, exposure to the moisture causes the thermoplastic adhesive to precipitate, thereby preventing adequate bonding to the wall of the fiber. In another instance, both protein and polymers present in the cell culture solution compete with the fiber present for gluing sites resulting in a contamination of the adhesive; thus preventing effective cross-linking in some areas. Hence, seal integrity is substantially degraded.

On the other hand, mechanical deformation (i.e., crimping or knotting), as well as heat sealing, tend to substantially weaken or crack the membrane over time. Due to the relative fragility of the membrane material, even a slight shearing force may fracture the membrane and render the device useless.

DISCLOSURE OF INVENTION

Accordingly, it is an object of the present invention to provide a method and apparatus for sealing implantable, hollow fiber encapsulation devices which maintain a longterm, cell-tight, seal integrity.

Another object of the present invention is to provide a method and apparatus for sealing loaded encapsulation devices which forms a reliable "dry" seal before and after cell loading.

Yet another object of the present invention to provide a method and apparatus for sealing implantable, hollow

fiber encapsulation devices which increases bonding of the adhesives to the fiber walls of the device.

It is another object of the present invention to provide a method and apparatus for sealing encapsulation devices without mechanically deforming the encapsulation device membrane surfaces.

Still another object of the present invention is to provide sealable entry ports for encapsulation devices, through which cell suspensions may be introduced into the device and subsequently reliably sealed.

It is a further object of the present invention to provide a method and apparatus for sealing implantable, encapsulation devices which is durable, compact, easy to maintain, has a minimum number of components and is economical to manufacture.

According to the present invention there is provided a sealed, implantable encapsulation device for providing a biologically active product or function to an individual, said encapsulation device comprising:

a permselective, porous membrane shaped so as to form a cell-impervious encapsulating enclosure including an exterior surface, an interior surface and an opening, said interior surface substantially defining a storage cavity and said opening providing open communication between said storage cavity and the exterior of said enclosure;

a non-permeable, non-porous fitting disposed within or about said opening so as to make a substantially cell-tight dry seal between said fitting and said enclosure, said fitting providing a cell-tight closure of said opening but further including an access bore therethrough providing open communication between said storage cavity and the exterior of said enclosure, dimensioned so as to permit introduction therethrough of living cells into said storage cavity;

living cells disposed in said storage cavity and capable of secreting a biologically active product or of providing a selected biological function to an individual after

AUSTRALIAN PATENT OFFICE

implantation, said membrane permitting passage therethrough of substances provided by said cells and required to provide said biological product or function; and

a non-permeable, non-porous plug member cooperating with the access bore of said fitting to form a cell-tight seal with said fitting to seal said access bore.

The invention also provides a sealed, implantable, hollow membrane encapsulation device for providing a biologically active product or function to an individual, said encapsulation device comprising:

a permselective hollow, porous membrane shaped so as to form a cell-impervious encapsulating enclosure including an exterior surface, an interior surface and at least one opening, said interior surface substantially defining a storage cavity and said at least one opening providing open communication between said storage cavity and the exterior of said enclosure;

sealing means at said at least one opening of said membrane including a non-permeable fitting contacting said at least one opening so as to make a substantially cell-tight dry seal between said fitting and said enclosure, said fitting further including an open bore extending therethrough, defining an inner surface of said fitting dimensioned so as to permit introduction therethrough of living cells into said storage cavity;

living cells disposed in said storage cavity capable of secreting a biologically active product or of providing a selected biological function to an individual, said membrane permitting passage therethrough of substances secreted by said cells and required to provide said biological product or function; and

a non-permeable, non-porous plug member cooperating with at least a portion of the inner surface of said fitting so as to form a cell-tight seal closing said open bore.

The invention also provides a sealed, implantable, hollow membrane encapsulation device for providing a biologically active product or function to an individual, said device comprising:

a permselective hollow, porous, membrane shaped so as to form a cell-impervious encapsulating enclosure including an exterior surface, an interior surface and first and second openings, said interior surface defining a storage cavity, said first and second openings providing

AUSTRALIAN PATENT OFFICE

open communication between said storage cavity and the exterior of said enclosure;

living cells disposed in said storage cavity capable of secreting a biologically active product or of providing a selected biological function to an individual, said membrane permitting passage therethrough of substances secreted by said cells and required to provide said biological product or function; and

first and second sealing means at said first and second openings, respectively, of said membrane, said second sealing means comprising a non-permeable, non-porous plug member of a larger transverse cross-sectional area than a transverse cross-sectional area defined by said membrane interior surface proximate said second opening, such that force-fit disposition of said plug member within said second opening prior to introduction of said living cells in said storage cavity results in a friction fit cell-tight dry seal closing said second opening.

The invention also provides a prefilling assembly for forming a sealable, implantable, hollow membrane encapsulation device, comprising:

a permselective hollow, porous, membrane shaped so as to form a cell-impervious encapsulating enclosure including an exterior surface, an interior surface and at least one opening, said interior surface defining a storage cavity, and said at least one opening providing open communication between said storage cavity and the exterior of said enclosure;

a non-permeable, non-porous fitting disposed within or about said at least one opening so as to make a substantially cell-tight dry seal between said fitting and said membrane, said fitting including a frangible neck portion projecting outwardly from said at least one opening and having a central bore extending through said neck portion into said cavity, and a housing portion continuous with and extending outwardly from said neck portion and having a central passage in axial alignment with said central bore, wherein said central bore and aligned central passage provide open communication through said fitting with the exterior of said encapsulating enclosure, and wherein at least said central passage is dimensioned so as to permit insertion of a filler tube for introduction of materials through the central passage and central bore into said storage cavity.

The invention also provides an implantable encapsulation device comprising: a tubular permselective hollow membrane having an exterior surface and an interior surface and having

AUSTRALIAN PATENT OFFICE

a closed end and an open end, the interior surface of said tubular permselective hollow membrane generally defining a storage cavity; a fitting disposed in or about said open end so as to form a cell-tight, dry seal between said fitting and the open end of said tubular permselective hollow membrane, said tubular permselective hollow membrane and said fitting together making said storage cavity a cell-tight enclosure; wherein at least a portion of said fitting is of a resilient, self-sealable material capable of permitting a syringe needle to penetrate therethrough to form an access port extending through said fitting, said material further being sufficiently resilient to cell-tight seal said access port upon withdrawal of said needle therefrom.

The invention also provides a method for forming a sealed, implantable, hollow membrane encapsulation device for providing a biologically active product or function to an individual, said method comprising the steps of:

(a) providing a permselective, porous, membrane shaped so as to form a cell-impervious encapsulating enclosure including an exterior surface, an interior surface and an opening, said interior surface substantially defining a storage cavity and said opening providing open communication between said storage cavity and the exterior of said enclosure;

(b) contacting said opening with a non-permeable, non-porous fitting in such a manner as to form a cell-tight dry seal between said fitting and said enclosure, wherein said fitting closes said opening and wherein said fitting is provided with an access bore extending therethrough, providing open communication between said storage cavity and the exterior of said enclosure and dimensioned so as to permit introduction therethrough of living cells into said storage cavity;

(c) depositing in said cavity, through said access port bore, living cells capable of secreting a biologically active product or of providing a selected biological function to an individual, said membrane permitting passage therethrough of substances secreted by said cells and required to provide said biological product or function; and

(d) contacting said access bore with a plug member shaped so as to cooperate with the access bore of said fitting and to form a cell-tight seal of said access bore.

AUSTRALIAN PATENT OFFICE

The invention also provides a method for forming a sealed, implantable, hollow membrane encapsulation device for providing a biologically active product or function to an individual, said method comprising the steps of:

(a) providing a permselective, porous, membrane shaped so as to form a cell-impervious encapsulating enclosure including an exterior surface, an interior surface and an opening, said interior surface substantially defining a storage cavity and said opening providing open communication between said storage cavity and the exterior of said enclosure;

(b) contacting said opening with a non-permeable, non-porous fitting in such a manner as to form a cell-tight dry seal between said fitting and said enclosure, wherein said fitting closes said opening and wherein said fitting comprises a frangible neck portion in contact with said opening and a housing portion extending outwardly therefrom, said fitting having an access bore extending through said neck portion and a central passage extending through said housing portion, said access bore and said central passage being aligned so as to provide open communication between said storage cavity and the exterior of said enclosure, said fitting further comprising a seal member disposed within or about said central passage, said seal at least partly closing said central passage but being penetrable by a filler tube;

(c) inserting a filler tube through said seal member and at least partly through said central passage and, optionally, at least partly through said access bore;

(d) depositing in said cavity, through said filler tube, living cells capable of secreting a biologically active product or of providing a selected biological function to an individual, said membrane permitting passage therethrough of substances secreted by said cells and required to provide said biological product or function;

(e) withdrawing said filler tube;

(f) breaking off the housing portion of said fitting at the frangible neck portion, thereby exposing a bonding surface of said fitting; and

(g) contacting said bonding surface with sealing means so as to close the access bore of the neck portion and to form a cell-tight seal of said enclosure.

The invention also provides a method of manufacturing a dry sealed, implantable, hollow membrane encapsulation device containing living cells, said method comprising:

AUSTRALIAN PATENT OFFICE

(a) providing a capsule formed from a permselective, porous membrane, said capsule enclosing a storage cavity and having at least one opening to said storage cavity;

(b) disposing a non-porous, non-permeable fitting within or about said opening in such a manner as to form a cell-tight dry seal between said fitting and said opening, said fitting including an access bore therethrough providing open communication with said storage cavity;

(c) depositing living cells through said access bore into said storage cavity; and

(d) inserting a plug member into said access bore, said plug member being formed of a polymeric elasticity memory material and characterized by a first transverse cross-sectional area, at a first temperature, smaller than a transverse cross-sectional area defined by said access bore, and a second transverse cross-sectional area, at a second temperature, larger than said transverse cross-sectional area defined by said access bore, said second temperature being the body temperature of an individual,

whereby said plug member at said second temperature forms a cell-tight seal of said access bore.

The invention also provides a sealed, implantable encapsulation device for providing a selected biologically active product or function to an individual, said encapsulation device comprising:

a first permselective, porous membrane having an interior surface and an exterior surface;

a second permselective, porous membrane in opposed relation to said first permselective, porous membrane, said second permselective, porous membrane also having an interior surface and an exterior surface;

a non-porous fitting disposed between said first and second permselective, porous membranes, said fitting having a fitting interior surface and a fitting exterior surface and having at least one access bore providing an opening between said fitting interior surface and fitting exterior surface, wherein said fitting contacts the respective interior surfaces of said first and second membranes to form a substantially cell-tight dry seal between said fitting and said first and second membrane interior surfaces, whereby the interior surfaces of said first

AUSTRALIAN PATENT OFFICE

and second membranes, together with the interior surface of said fitting, define and enclose a storage cavity, to which said at least one access bore in said fitting provides open communication, said at least one access bore being dimensioned so as to permit introduction therethrough of living cells into said storage cavity;

living cells disposed in said storage cavity and capable of secreting a biologically active product or of providing a selected biological function to an individual after implantation, said first and second membranes permitting passage therethrough of substances provided by said living cells and required to provide said biological product or function; and

a non-porous plug member disposed in or about said at least one access bore of said fitting to form a cell-tight seal with said fitting to seal said at least one access bore and to provide a cell-tight enclosure for said living cells.

The invention also provides a method for forming a sealed, implantable encapsulation device for providing a selected biological product or function to an individual, said method comprising the steps of:

(a) positioning a substantially non-porous spacer fitting, having an inner surface and an outer surface, and having at least one access bore providing an opening extending from said fitting inner surface to said fitting outer surface, between a first interior surface of a first permselective porous membrane and a second interior surface of a second permselective porous membrane;

(b) forming a first substantially cell-tight dry seal between said first membrane and a first engaging surface of said fitting;

(c) forming a second substantially cell-tight dry seal between said second membrane and a second engaging surface of said fitting, said fitting inner surface, said first membrane interior surface and said second membrane interior surface together defining a storage cavity therein;

(d) depositing in said storage cavity, through said at least one access bore, living cells capable of providing a selected biological product or function to an individual, said first and said second membranes permitting passage of substances between the individual and cells required to provide said biological product or function; and

(e) closing said at least one fitting access bore by disposing a plug member in or about

AUSTRALIAN PATENT OFFICE

said at least one access bore to form a substantially cell-tight seal of said opening.

The invention also provides a sealed, implantable, encapsulation device for providing a biologically active product or function to an individual, said encapsulation device comprising:

a permselective, porous membrane shaped so as to form a cell-impervious encapsulating enclosure including an exterior surface, an interior surface and an opening, said interior surface substantially defining a storage cavity and said opening providing open communication between said storage cavity and the exterior of said enclosure;

a fitting disposed within or about said opening so as to form a substantially cell-tight dry seal between said fitting and said membrane, said fitting being made of a resilient, self-sealable material capable of permitting a syringe needle to penetrate therethrough to form an access port extending through said fitting, said material further being sufficiently resilient to cell-tight seal said access port upon withdrawal of said needle therefrom; and

living cells disposed in said storage cavity and capable of secreting a biologically active product or of providing a selected biological function to an individual, said membrane permitting passage therethrough of substances secreted by said cells and required to provide said biological product or function.

The invention also provides a method for forming a sealed, implantable hollow membrane encapsulation device, comprising the steps of:

(a) providing a permselective hollow, porous membrane shaped so as to form a cell-impervious encapsulating enclosure including an exterior surface, an interior surface and at least one opening, said interior surface defining a storage cavity and said at least one opening providing open communication between said storage cavity and the exterior of said enclosure;

(b) applying a first curable adhesive around an outer peripheral surface of said membrane proximate said at least one opening so as to form a bead extending completely around the periphery of said membrane;

(c) curing said first curable adhesive by an amount sufficient to form a substantially cell-tight dry seal between the outer peripheral surface of the membrane and said

AUSTRALIAN PATENT OFFICE

bead of curable adhesive;

(d) depositing in said storage cavity living cells capable of secreting a biologically active product or of providing a selected biological function to an individual, said membrane permitting passage therethrough of substances provided by said living cells and required to provide said biological product or function;

(e) applying a second curable adhesive so as to cover said at least one opening and to contact said bead; and

(f) curing said second curable adhesive to form a cap member which cooperates with said bead to form a cell-tight seal.

The invention also provides a method of depositing in a storage cavity of an implantable, hollow membrane encapsulation device living cells capable of providing a biologically active product or function to an individual, said encapsulation device including a permselective, porous membrane shaped so as to form an encapsulating enclosure characterized by a storage cavity and an opening, said device further comprising a non-porous, non-permeable fitting disposed within or about said opening in such a manner as to form a cell-tight dry seal between said fitting and said membrane, said fitting having an access port extending through said fitting and providing open communication between said storage cavity and the exterior of said device, said method comprising the steps of:

(A) passing a filler tube, dimensioned to extend through said access port, into said access port to a position proximate said storage cavity;

(B) depositing said living cells from said filler tube into said cavity;

(C) withdrawing said filler tube; and

(D) forming a cell-tight seal at said fitting access port by providing a plug member formed to cooperate with the access port of said fitting to form a cell-tight seal therewith.

The invention also provides a sealed, implantable encapsulation device for providing a biologically active product or function to an individual, said encapsulation device comprising:

a permselective hollow, porous membrane shaped so as to form a cell-impervious encapsulating enclosure including an exterior surface, an interior surface and at least one

AUSTRALIAN PATENT OFFICE

opening, said interior surface defining a storage cavity and said at least one opening providing open communication between said storage cavity and the exterior of said enclosure;

a flexible fitting of non-permeable, non-porous material disposed within or about said at least one opening so as to make cell-tight dry sealing engagement with said membrane proximate said at least one opening, said fitting further including an inwardly facing surface defining an access bore extending into said storage cavity, dimensioned so as to permit introduction of living cells into said storage cavity;

living cells disposed in said cavity capable of secreting a biologically active product or of providing a selected biological function to an individual, said membrane permitting passage therethrough of substances secreted by said cells and required to provide said biological product or function;

wherein said fitting further comprising a bonding surface and an abuttable surface in opposed relation adjacent said access bore, the contact of said surfaces together following application of a solvent for said non-permeable, non-porous material to at least one of said surfaces forming a cell-tight seal and closing said access bore to the passage of said living cells.

The invention also provides a method for forming a sealed, implantable, hollow membrane encapsulation device for providing a biologically active product or function to an individual, said method comprising the steps of:

(a) providing a permselective hollow, porous, membrane shaped so as to form a cell-impervious encapsulating enclosure including an exterior surface, an interior surface and at least one opening, said interior surface defining a storage cavity and said at least one opening providing open communication between said storage cavity and the exterior of said enclosure;

(b) disposing within or about said at least one opening a flexible fitting made of non-permeable, non-porous material and forming a cell-tight, first dry seal between said at least one opening of said membrane said flexible fitting, the fitting including an inwardly facing surface defining an open bore providing communication between the exterior of said enclosure and said cavity and further including, adjacent said open bore, a bonding surface

AUSTRALIAN PATENT OFFICE

Q OPER GCP 72490 C 18 12 97

and an abuttable surface in opposed relation;

(c) depositing in said cavity, through said open bore, living cells capable of secreting a biologically active product or of providing a selected biological function to an individual, said membrane permitting passage therethrough of substances secreted by said cells and required to provide said biological product or function; and

(d) exposing at least one of said bonding surface and said abuttable surface of said flexible fitting to a solvent for said material, then contacting said bonding surface and said abuttable surface together to form a cell-tight second seal which closes said open bore.

The invention also provides a sealed, implantable encapsulation device for providing a biologically active product or function to an individual, said encapsulation device comprising:

a permselective, porous membrane shaped so as to form a cell-impervious encapsulating enclosure including an exterior surface, an interior surface and an opening, said interior surface defining a storage cavity and said opening providing open communication between said storage cavity and the exterior of said enclosure;

a non-permeable, non-porous fitting disposed within or about said opening so as to form a substantially cell-tight dry seal between said fitting and said enclosure, said fitting further including an access bore therethrough, dimensioned so as to permit introduction of living cells into said storage cavity;

living cells disposed in said storage cavity and capable of secreting a biologically active product or of providing a selected biological function to an individual, said membrane permitting passage therethrough of substances secreted by said cells and required to provide said biological product or function;

a non-permeable, non-porous plug member disposed in or about the access bore of said fitting to form a cell-tight seal closing said access bore; and

a tether member coupled to said fitting.

AUSTRALIAN PATENT OFFICE

~~surface together to form the cell-tight second seal to seal open bore.~~

BRIEF DESCRIPTION OF THE DRAWING

The assembly of the present invention has other objects and features of advantage which will be more readily apparent from the following description of the Best Mode of Carrying Out the Invention and the appended claims, when taken in conjunction with the accompanying drawings, in which:

FIGURES 1A-1C are a series of side elevation views, in cross-section, of a sealing implantable, hollow membrane encapsulation device constructed in accordance with the present invention having a detachable necked hub assembly and illustrating the filling and sealing of the encapsulation device.

FIGURE 2 is an enlarged, fragmentary, side elevation view, in cross-section, of the membrane encapsulation device taken substantially along the bounded line 2-2 in FIGURE 1B and showing an annular fitting mounted to an end of a hollow membrane.

FIGURE 3 is an enlarged, top perspective view, partially broken away, of the necked hub assembly of FIGURE 1A.

FIGURES 4A and 4B are a series of enlarged, fragmentary, side elevation views, in cross-section, of an alternative embodiment of the hollow fiber encapsulation device having a polyurethane tube fitting.

FIGURES 5A and 5B are a series of enlarged, fragmentary, side elevation views, in cross-section, of an alternative embodiment of the present invention

AUSTRALIAN PATENT OFFICE

having a deformable silicone tubing sealed by a ball shaped plug member.

FIGURE 6 is an enlarged, fragmentary, side elevation view, in cross-section, of an alternative embodiment of the present invention illustrating a fitting molded to the end of the hollow membrane.

FIGURE 7 is an enlarged, fragmentary, side elevation view, in cross-section, of another alternative embodiment of the encapsulating device employing a threaded allen screw as a plug member.

FIGURE 8 is an enlarged, fragmentary, side elevation view, in cross-section, of yet another alternative embodiment of the present invention employing a conical plug member.

FIGURE 9 is an enlarged, side elevation view, in cross-section, of still another alternative embodiment of the hollow membrane encapsulation device employing a polymeric elasticity memory material fitting.

FIGURE 10 is an enlarged, side elevation view, in cross-section, of another alternative embodiment of the polymeric elasticity memory material fitting having a tubular tether portion.

FIGURE 11 is an enlarged, side elevation view, in cross-section, of another alternative embodiment of the polymeric elasticity memory material fitting having a memory material cap member.

FIGURE 12 is an exploded top perspective view of a flat sheet encapsulation device constructed in accordance with the present invention.

FIGURE 13 is an enlarged, fragmentary, side elevation view, in cross-section, of the flat sheet encapsulation device of FIGURE 12 and illustrating a molded edge.

FIGURE 14 is a side elevation view, in cross-section, of a cup-shaped hollow membrane encapsulation device of the present invention having a detachable necked hub assembly and illustrating the filling of the device with a hypodermic syringe needle.

FIGURE 15 is an enlarged, fragmentary, side elevation view, in cross-section, of a hollow membrane encapsulation device of the present invention having a self-sealable fitting and illustrating the filling of the device with a hypodermic syringe needle.

FIGURE 16 is an enlarged, fragmentary, side elevation view, in cross-section, of a hollow membrane encapsulation device of the present invention having a fitting formed of adhesive which bonds to a cured bead of adhesive cell-tight "dry" sealed to the membrane.

FIGURE 17 is a top perspective view, partially broken away, of an encapsulation device of the present invention having a tether connector for mounting the tubular tether portion to the hub.

FIGURES 18A and 18B are a series of side elevation views, in cross-section, of a hollow membrane encapsulation device of the present invention having flexible fittings each having opposed surfaces formed to bond to one another in a cell-tight sealed engagement.

BEST MODE OF CARRYING OUT THE INVENTION

The following description is presented to enable a person skilled in the art to make and use the

invention, and is provided in the context of a particular application and its requirements. Various modifications to the preferred embodiment will be readily apparent to those skilled in the art, and the generic principles defined herein may be applied to other embodiments and applications without departing from the spirit and scope of the invention. Thus, the present invention is not intended to be limited to the embodiments shown, but is to be accorded with the widest scope consistent with the principles and features disclosed herein. It will be noted here that for a better understanding, like components are designated by like reference numerals throughout the various figures.

Attention is now directed to FIGURES 1(A-C) and FIGURE 12, where the subject sealed, implantable, encapsulation device, generally designated 20, for diffusing a biologically active product or function to an individual is illustrated. Briefly, the present device includes a fitting, generally designated 32, having an access port or open bore 34 extending through fitting 32 from an outer surface 39 of the fitting to an inner surface 48 of the fitting. A permselective, porous, membrane, generally designated 21, having an interior surface 22, cooperates with the fitting inner surface to form at least a substantial portion of a storage cavity or lumen, generally designated 23, therebetween. That is, fitting inner surface 48 and membrane interior surface 22 together define a substantial portion or all of storage cavity 23. In accordance with the present invention, membrane 21 is in substantially cell-tight dry sealing engagement with an engaging surface 43 of fitting 32 to seal cavity 23. Living cells in cell culture solution 24 are disposed in the cavity which are capable of secreting a biologically active product or of providing a selected

biological function to an individual. Further, membrane 21 is formed to permit passage of substances between the individual and cells required to provide the biological product or function. A plug member, generally designated 35, cooperates with a bonding surface 38 of the fitting to form a cell-tight sealing engagement therewith to seal open bore or access 34.

In one particular configuration of the present invention (FIGURES 1-11), the permselective hollow membrane substantially defines storage cavity or a lumen 23 therein in which the living cells in cell culture solution 24 are disposed. First and second sealing means 25 and 26, respectively, are provided at respective first and second ends 30 and 31, respectively, of membrane 21 to form a cell-tight lumen 23 therein. Second sealing means 26 includes fitting 32 having inwardly facing surface 33 which defines open bore 34. As mentioned, an engaging surface 43 of fitting 32 is formed and dimensioned to be in a cell-tight, dry sealing engagement with membrane end 31. Plug member 35 cooperates with a bonding surface (fitting distal end bonding surface 38 and/or fitting inwardly facing surface 33) of the fitting to form a cell-tight sealing engagement therewith to seal open bore 34.

In another particular configuration of the present invention (FIGURES 12 and 13), a flat sheet encapsulation device 20 is provided including a first permselective, porous, sheet membrane, generally designated 21a, having a first interior surface 22a, and a second permselective, porous, sheet membrane, generally designated 21b, spaced-apart from the first membrane and having a second interior surface 22b oriented in opposed relation to the first interior surface 22a. Fitting 32 is positioned between the

first and the second membrane (FIGURE 12) and is formed with inwardly facing surface 33 which defines access port 34 extending through the fitting. First membrane interior surface 22a, second membrane interior surface 22b and the fitting inner surface 48 cooperate to form storage cavity 23 which holds living cell solution 24 therein. The first interior surface 22a and the second interior surface 22b further both being mounted to the fitting in substantially cell-tight dry sealing engagement therebetween. Plug member 35 cooperates with bonding surface 38 of the fitting to form a cell-tight sealing engagement therewith to seal the access port and the living cells disposed in the storage cavity.

In accordance with the present invention, before cell culture solution 24 may be filled into the lumen or storage cavity of either particular configuration, a reliable, cell-tight, "dry" seal is formed between fitting 32 and the porous, permselective membrane 21. First, the seal is "cell-tight" which means that the seal is impermeable to the viable cells contained in the solution, similar to fiber membrane 21, so that they will not pass therethrough and into the host. Yet, the seal may be permeable to the other cell solution constituents, such as nutrients, therapeutic agents or the like. Secondly, it will be understood that the term "dry" seal is defined as a seal formed between a substantially moisture or water-free membrane and the substantially annular fitting 32 of the second sealing means 26. Since this "dry" seal technique is employed before potential contamination by the cell solution, it is considerably more reliable than the "wet" seal techniques. A dry semipermeable membrane is afforded the opportunity to suitably bond to a dry surface of the fitting. Accordingly, the absence of moisture or water in the pores of the membrane, caused

by contact with the solution, substantially reduces seal failure, e.g., precipitation of the adhesives employed. Further, the absence of cell solution elements decreases contamination of the adhesive so that it may effectively bond between the opposing adhesive sites surfaces.

This can be contrasted to the "wet" seal technique employed in most of the prior art fiber devices after the lumen has been filled or loaded with the viable cell solution. As mentioned, one of the problems associated with the prior art implantable, hollow fiber devices is their inability to form reliable seals with or bond to a "wet" membrane surface at the open end thereof due to contamination by the cell solution.

Subsequently, as shown in FIGURE 1A for example, the cell culture solution may be disposed or deposited, through open bore 34 in fitting 32, in a manner to be discussed in greater detail below. Since the annular fitting is substantially non-porous, it will not have the tendency to absorb or trap the cell solution thereupon. Even should the solution contact the bonding surface 38 or inwardly facing bonding surface 33 of the fitting, the solution can be easily removed in a suitable manner. For instance, a volatile, biocompatible solvent may be applied on a swab to wipe the fitting surface so that the surface becomes "dry" or free of the above-mentioned contaminants. When plug member 35 is bonded or attached to the top surface or inwardly facing surface 33 of fitting 32 (FIGURE 1C), another suitable "dry" bond may be attained which, again, is not subject to the bonding deficiencies experienced by the prior art assemblies.

Accordingly, the novel technique and structure of the present invention permits "dry" bonding of the membrane

AUSTRALIAN PATENT OFFICE

to a fitting to form substantially cell-tight seals. This seal and bond, hence, remains integral for months or years after implantation in its host. Importantly, this technique is substantially non-toxic to the cells and will not effect their viability. The present invention, further, does not mechanically deform either the fragile membrane or the fitting to cause fatigue or stress. Moreover, as will be more apparent, the cell-tight "dry" seal may be formed through mechanical contact between the fitting and the membrane and/or through a suitable adhesive.

Referring back to FIGURES 1-11, the first particular configuration of the present invention will now be described in greater detail. Hollow membrane 21 and first sealing means 25, which preferably provides no passages into lumen 23, are conventional structures well known in the field. First sealing means 25 may be formed at one end 30 of the hollow membrane in any traditional manner applied in the art (i.e., polymer adhesives, and/or crimping, knotting and heat sealing). Hence, the manner in which both hollow membrane 21 and first seal 25 are formed do not constitute a novel feature of the present invention and are not claimed as such. However, it will be understood that first open end 30 of hollow fiber membrane 21 may be cell-tight dry sealed employing the fittings and the same techniques which cell-tight dry seal second open end 31. It will further be understood that hollow membrane 21 may be provided with only one open end 31, as best viewed in FIGURE 14, extending into storage cavity 23. In this arrangement, hollow membrane 21 is cup-shaped and only open end 31 need be sealed. These cup-shaped membranes may be formed using a capsule extrusion method disclosed in our PCT Application, S.N. WO9300063.

As illustrated in FIGURE 2, annular fitting 32 includes a base portion 36 projecting outwardly from membrane second end 31 and a leg portion 37 extending downwardly from base 36. The outer perimeter of leg portion 37 is formed and dimensioned to be received in lumen opening at second or opposing end 31. Upon receipt, a downwardly facing shoulder portion 40 of the fitting, formed by the intersection between base 36 and leg portion 37, seats against an upper annular edge 41 of second end 31. In this configuration, annular fitting 32 is preferably substantially rigid and may be composed of one of a number of suitable biocompatable materials which are substantially non-toxic to the living cells. These materials include polyurethanes, epoxies, silicones, and acrylate polymers like alkaline methoacrylates, cyano acrylates, polymethyl methacrylate and poly((2-dimethylamino)ethyl methacrylate.

In a preferred form, an adhesive 42 (FIGURE 2) is provided which forms the suitable above-defined "dry" seal and bond between the outer circumferential engaging surface 43 of leg portion 37 and the interior surface 22 of porous membrane 21. The adhesive must be a substantially rapidly polymerizing adhesive, to reduce potential toxic contamination of the cells by uncured adhesive, and must not discharge sufficient toxic by-products to be substantially detrimental to cell viability. Hence, the adhesive must also substantially polymerize completely. Suitable adhesives include light-curable acrylate polymer adhesive, two-part polyurethane adhesives, epoxies, silicones, and other acrylate polymers. In some instances, the adhesive could be polymerized in situ therewith, as opposed to precipitated, to form an effective, durable polymer bond with the fitting.

After fitting 32 has been "dry" sealed to membrane 21, the encapsulation device may be sterilized by any conventional method which does not degrade the integrity of the membrane, such as ethylene oxide (ETO).

Referring back to FIGURES 1A-1C, one preferred embodiment of the present invention is illustrated including a detachable necked hub assembly, generally designated 44, coupled to base 36 of the annular fitting by a frangible neck portion 55. Therefore, the hub assembly is capable of selective separation from the fitting upon breaking of the frangible neck portion 55 at a frangible region thereof.

As best viewed in FIGURE 3, hub assembly 44 includes a housing 45 which provides a passageway 46 positioned in axial alignment with open bore 34 of annular fitting 32. Hence, while annular fitting 32 is "dry" sealed to membrane 21, the lumen may be accessed through passageway 46 and open bore 34.

Passageway 46 includes a cavity portion 47 formed and dimensioned to receive and seat a seal member 50 therein. As will be discussed below, seal member 50 provides an access hole 49 extending therethrough, in coaxial alignment with passageway 46, which is formed to permit the passage of a filling tube 54 (FIGURE 1A) therethrough for deposition of cell solution 24 into storage cavity 23. A cap member 51 is provided to be positioned over seal member 50 which is snap fit or snugly engaged with the vertical walls 52 forming cavity 47 to snugly retain the cap member in cavity 47. Seal 50, preferably silicone, will then be stably retained in cavity 47. Cap member 51 includes a port 53 extending therethrough which permits access to seal member access hole 49 and to passageway 46.

AUSTRALIAN PATENT OFFICE

Housing 45 may be integrally formed with fitting 32 and may be fabricated using conventional machining or molding techniques. This housing may be composed of an acrylate polymer or the like.

In accordance with the present invention, as viewed in FIGURE 1A, seal member 50 may be pierced by inserting filling tube 54 through port 53 and forcing it through seal member access hole 49, and thereon through passageway 46 until a distal end 73 of filling tube 54 abuts against an upwardly facing shoulder portion 74 of housing 45. This shoulder portion prevents the substantially blunt distal end 73 of filler tube 54 from penetrating open bore 34 and extending into cavity 23 where the filling tube distal end may cause damage to the membrane. Shoulder portion 74, as shown in FIGURES 1 and 3, is formed from the intersection of passageway 46 and the smaller diameter open bore 34. Accordingly, the outer diameter of filling tube 54 is larger than the diameter of open bore 34 and smaller than the diameter of passageway 46.

Seal member 50 is preferably composed of a resilient flexible material, such as silicone, which will permit a larger diameter filling tube 54 to be passed through smaller diameter access hole 49. The resiliency of seal member 50 creates a seal around the outer periphery of filling tube 54 sufficient to prevent contaminants from entering storage cavity 23 during filling thereof.

Subsequently, cell suspension 24 may be filled, injected or deposited into lumen 23 through filling tube 54 to a level just below the bottom of leg portion 37 of the fitting. Incidently, due to the porous nature of membrane 21, the volume of air already inside cavity 23 is displaced through the pores during

filling. Further, the cell suspension fluid or water also flows out of the pores which essentially concentrates the cell solution in the cavity.

The filling tube is then withdrawn, whereupon, the necked hub assembly may be selectably and manually separated from annular fitting 32 (FIGURE 1B). FIGURES 1A, 2 and 3 illustrate that neck portion 55 is inwardly inclined which facilitates selective separation of the hub assembly from the fitting by manually applying a shearing force thereto. Upon breaking the frangible neck portion 55 (FIGURE 1B) and separating the hub assembly 44, a virgin bonding surface 38 and the end of open bore 34 is exposed which subsequently must be sealed.

Exposed open bore 34 of the annular fitting may be closed or sealed using a light curable acrylate adhesive (e.g., Luxtrak™ LCM adhesives by ICI Resins U.S.) or other biocompatible adhesive to form plug member 35 which cooperates with fitting distal end bonding surface 38 or inwardly facing surface 33 to form a cell-tight sealing engagement therewith to seal the open bore. In the light curable approach, a blue light may be employed which is not damaging to the viability of the cells.

The virgin portion of the bonding surface, which is created by the fracture of the neck portion, is sufficiently rough or jagged to enhance bonding of the adhesive thereto. Hence, as viewed in FIGURE 1C, an open bore seal plug member 35 of adhesive that covers open bore 34 is more securely bonded to bonding surface 38 in a manner forming another cell-tight, "dry" seal.

The hub assembly 44 may be removed without causing the cell solution to wet or contaminate inwardly facing

AUSTRALIAN PATENT OFFICE

surface 33 of open bore 34. However, should the solution wet the inwardly facing surface, it may be removed in most instances, as above-discussed, so that it becomes "dry". Furthermore, it will be appreciated that the lumen may be filled by any conventional method which substantially prevents the cell solution from contacting inwardly facing surface 33 forming open bore 34 to which a "dry" seal is to be formed. For example, in an alternative approach, the filling tube may be provided by a hypodermic syringe needle 54, as shown in FIGURE 14, which pierces seal member or septum 50 by inserting syringe needle 54 through port 53, piercing septum 50, and thereon through passageway 46 and open bore 34 proximate lumen 23. Subsequently, cell suspension 24 may be filled, injected or deposited into lumen 23 through syringe needle 54 to a level just below the bottom of leg portion 37 of the fitting. It will further be appreciated that other filling methods, such as commercially available automated techniques, may be employed as well.

In a related embodiment, fitting 32 may be composed of a resilient self-sealable material, such as silicone, which is formed and dimensioned to be positioned in second open end 31 in a manner causing a cell-tight "dry" seal between fitting 32 and the porous, permselective membrane 21. In this configuration, as best viewed in FIGURE 15, fitting 32 provides no access port into storage cavity 23. Hence, fitting 32 must be capable of permitting passage of a syringe needle or the like so that the syringe forcibly creates an access port 34. In accordance with the present invention, after the living cells are deposited in the storage cavity and upon withdrawal of the needle therefrom, the self-sealable fitting 32 is sufficiently resilient to sealably close access port 34 caused by the syringe to form a cell-tight seal.

Turning now to FIGURES 4A and 4B, an alternative embodiment of the present invention is illustrated. Rather than the annular fitting being substantially preformed and/or molded, the fitting 32 may merely be comprised of a section of tubing having an outer perimeter engaging surface 56 which is "dry" sealed to the interior surface 22 by adhesive 42. Preferably, tubular fitting 32 is provided by polyurethane tubing which projects distally beyond the annular edge portion 41 of the membrane 21. Similarly, adhesive 42 may be a two-part polyurethane adhesive (e.g., CasChem 2-part Vorite/Polycin Adhesive).

FIGURE 4A shows that tubular fitting 32 is provided with open bore 34 for the injection of the cell suspension by a filler tube (not shown) or the like. Upon removal of the tube, open bore 34 is preferably sealed by melting the upper portion of the tubing extending beyond the hollow membrane to form melted seal plug member 57 (FIGURE 4B). Since polyurethane fuses quickly and is a poor heat conductor, the process of heating the upper portion the end with a soldering iron or the like will not significantly heat the cells and thus will not effect their viability. As a precautionary measure, the fused upper seal 57 of tubular fitting 32 may be covered with an acrylate polymer seal 58 (FIGURE 4B) or the like to ensure a cell-tight, "dry" seal. Accordingly, in this configuration, both fused seal 57 and polymer seal 58 form plug member 35.

Tubular fitting 32 could further be comprised of a deformable, substantially non-porous material such as silicone. In this embodiment, as best viewed in FIGURES 5A and 5B, open bore 34 may be sealed by pushing a stainless steel, teflon or other polymer ball-shaped plug member 35, via rod 59, into open bore

34 of tubular fitting 32. The diameter of ball-shaped plug member 35 is preferably provided with a larger diameter than the inner diameter of both open bore 34 and lumen 23. In this manner, as rod 59 pushes plug member 35 into tubular fitting 32, the ball resiliently expands inwardly facing surface 33 of the fitting to form a suitable cell-tight seal. Plug member 35 is preferably pushed all the way down until it is positioned proximate the annular edge portion 41 of membrane 21 (FIGURE 5B). An adhesive (not shown) may then be applied into bore 34 to retain the ball-shaped plug member 35 in place.

In another embodiment of the present invention, as best viewed in FIGURE 6, the inwardly facing surface 33 forming open bore 34 of annular fitting 32 may be threaded. To seal the bore, a threaded plug member 35 or screw may be provided which engages the threads. Similarly, an acrylate polymer seal 61 or the like may cover the head of screw plug member 35 to ensure a cell-tight, "dry" seal and, further, provide a smoother overall top surface.

This embodiment may be fabricated by attaching a prefabricated threaded port to the end of the membrane or by molding a fitting directly to the membrane end. In this arrangement, no adhesives will be necessary since fitting 32 is molded directly thereto. The molded fitting preferably comprises a substantially non-porous polyurethane or the like. The embodiment of FIGURE 6 further illustrates that engaging surface 43 may cooperate with an outer facing peripheral surface 68 of membrane 21 to form a substantially cell-tight "dry" sealing engagement therewith.

FIGURE 7 shows that the threaded plug member may be provided by a headless screw such as an allen screw

AUSTRALIAN PATENT OFFICE

plug 35 in order to lie flush with the upper surface of the fitting so that it may be smooth. The fitting 32 in this embodiment may extend past annular edge portion 41 of the hollow membrane 21 to form a ledge 60 to retain additional adhesive sealant 42. This further ensures a proper "dry" seal between the non-porous fitting and the porous fiber membrane.

In yet another alternative embodiment, open bore 34 may include a tapered portion 62 (FIGURE 8) which inclined outwardly which is formed and dimensioned to receive a conical plug member 35 of a suitable material, such as a polymer or an elastomer. Conical plug member 35 may be friction fit in tapered bore portion 62 or may be bonded thereto by applying the above-mentioned adhesives. When adhesives are applied in this application, it will be appreciated that the material of plug member 35 be substantially non-porous which facilitates adhesion of plug member 35 thereto. Moreover, it will be understood that the plug member 35 and similarly shaped bore portion 62 may be practically any convenient geometric shape without departing from the true scope and nature of the present invention. Alternatively, tapered portion 62 may be sealed with a suitable adhesive.

As best viewed in FIGURE 9, fitting 32 may be formed from a polymeric elasticity memory material capable of controlled and predetermined expansion and/or contraction above and below a glass transition region temperature, T_g. In a polymeric elasticity memory material, such as that disclosed in Y. Shirai et al., "Development of Polymeric Shape Memory Material", *Mitsubishi Technical Bulletin* n.184 (December 1988), the material may exhibit and retain certain structural and physical properties at a temperature above T_g as compared to those properties while at T_g. Similarly,



the material may exhibit and retain certain structural and physical properties at a temperature below T_g as compared to those properties at T_g and above T_g.

For example, in accordance with the present invention, the memory material composing fitting 32 (FIGURE 9) may exhibit a reduced modulus of elasticity, at a temperature above and below T_g, as compared to its modulus of elasticity at T_g. Hence, fitting 32 may be fabricated to a desired shape and transverse cross-sectional area (not shown), at body temperature (i.e., 98.6 °F which the material will retain once device 20 is implanted in the body), which is greater than the transverse cross-sectional area (not shown) defined by the interior surface 22, at second end 31. Subsequently, fitting 32 may be cooled to its T_g, preferably between the body temperature and room temperature, where the fitting may be deformed and reshaped to have a transverse cross-sectional area less than that enclosed by the interior surface at second end 31. This smaller area will facilitate insertion into the lumen entrance. By further cooling the material below T_g, because the modulus of elasticity is reduced at a temperature below and above T_g, deformed fitting 32 will retain its shape until rewarmed back up to T_g. Upon insertion into this entrance of lumen 23, and upon rewarming of the fitting back to T_g, the fitting will convert back to its structural shape and physical characteristics exhibited at a temperature above T_g. Therefore, upon expansion of the transverse cross-sectional area of the fitting, the perimeter wall 63 will engage or force-fit in sealing contact against interior surface 22 of lumen 23 to form a suitable cell-tight, dry seal therebetween. Further, by maintaining the material at body temperature, the shape and physical characteristics of the material will be retained as well.

It will be appreciated that first sealing means 25 may also be composed of a elasticity memory material. In this form, it may be preferable to provide an annular seating portion 64 proximate the bottom opening of first end 30 ~~which~~ having a transverse cross-sectional area ~~area~~ smaller than that of the lumen. A memory material fitting 67 of first seal 25 may then be inserted into lumen 23 and seated against seating portion 64 proximate first end 30. Subsequently, the material may be rewarmed to T_g where the diameter expands so that the outer perimeter wall 63 is in force-fit sealing contact against interior surface ~~38~~ 22 of lumen 23 to form a suitable cell-tight, dry seal therebetween.

Because of the reduced modulus of elasticity upon rewarming the material to body temperature, as compared to the modulus at T_g, the memory material may be used to form a tether portion 65 which functions to anchor encapsulation device 20 with the recipient. Hence, the tether may be attached to the appropriate area of the recipient with a suture, surgical staple or the like. Further, tether 65 may aid in the removal of the membrane encapsulation device from the body.

FIGURE 10 illustrates that the memory material fitting 32 may also work in conjunction with a substantially non-porous tubular tether device 65 which cofunctions as a tether and a means for loading the lumen with cell solution (not shown) through open bore 34. In this arrangement, open bore 34 may be cell-tight sealed by a plug member (not shown) composed of a memory material or may be sealed by the above-mentioned methods so as to form a "dry" seal.

Finally, as best viewed in FIGURE 11, a polymeric elasticity memory, cup-shaped, end cap 66 may be provided which exhibits the structural and physical

AUSTRALIAN PATENT OFFICE

characteristics in which, rather than expanding at a temperature above T_g, the cap 66 contracts or shrinks at T_g and at body temperature to sandwich membrane 21 between cap 66 and memory material fitting 32, thereby forming a cell-tight seal therebetween.

Turning now to FIGURES 12 and 13, the substantially flat encapsulation device configuration of the present invention will now be described. In the preferred form of flat sheet device 20, fitting 32 is provided by a relatively thin annular ring member having an inner diameter formed by inner surface 48. Inwardly facing surface 33 forms access port 34 extending into storage cavity 23 so that cavity 23 may be filled with living cell solution 24. Device 20 is thus a substantially flat disc-shaped encapsulation device.

It will be understood, however, annular ring fitting 32 may be formed in many other practical geometric shapes as well without departing from the true spirit and nature of the present invention. The main principal is that fitting inner surface 48 is formed to cooperate with the interior surfaces 22a, 22b of sheet membranes 21a, 21b, respectively, to form storage cavity 23. For instance, fitting 32 may be shaped as a half-annular ring (not shown) or be wedge-shaped. This configuration may necessitate either: bonding engagement between sheet membranes 21a and 21b in a cell-tight dry sealing manner; or providing a single sheet membrane which extends around the ring to cell-tight dry seal with both a first engaging surface and an opposing second engaging surface (equivalent to first engaging surface 43a and opposing second engaging surface 43b of fitting 32 in FIGURE 12).

Extending radially outwardly from an outer facing surface 39 or the outer perimeter of fitting 32 is

AUSTRALIAN PATENT OFFICE

access neck portion 70 which provides a portion of bore 34 extending longitudinally therethrough. As shown in FIGURE 12, cavity 23 can be accessed through port 34. Although not illustrated, neck portion 70 may be provided by a unitary tube member which is integrally moulded into annular ring fitting 32 during molding fabrication. Incidently, similar to the previous configuration, fitting 32 is preferably rigid and may be composed of a number of materials such as polyurethanes, epoxies, silicones, and acrylate polymers like alkaline methacrylates, cyano acrylates, polymethyl methacrylate and poly (2-dimethylamino) ethyl methacrylate. In some instances, it may be preferable to compose fitting 32 from an elastomer, such as polyurethane, so that the seal formed around the edge of the flat sheet device can be slightly deformed to facilitate implantation in certain sites in the body.

Permselective, porous membrane is provided by first sheet membrane 21a and second sheet membrane 21b disposed in opposing relation and spaced apart by fitting 32. As mentioned previously, annular ring fitting 32 may be provided by only a half ring or wedge-shaped ring. In this arrangement, only portions of first sheet membrane 21a are spaced-apart from portions of second sheet membrane 21b (not shown). Both sheet membranes 21a, 21b, cooperate with and seat against respective engaging surfaces of fitting 32 to form a substantially cell-tight dry seal therebetween. Accordingly, first membrane interior surface 22a, second membrane interior surface 22b, and fitting inner surface 48 form storage cavity 23 for holding living cell solution 24 therein. In some circumstances, it may be preferable for the permeability of the first sheet membrane 21a to differ from that of the second sheet membrane 21b. For instance, it may be desirable to control the flow of nutrients through the membranes. The

AUSTRALIAN PATENT OFFICE

membranes, however, must be impermeable to the living cells.

In accordance with the present invention, the cell-tight dry seal is formed by positioning or sandwiching annular ring 32 between the first and the second sheet membranes in abutting relation so that the respective interior surfaces seat against the respective surfaces of the fitting. During fabrication, as viewed in FIGURE 13, a thermoplastic edge portion 71 is preferably molded circumferentially or peripherally around fitting outer facing surface 68 and the perimeter edges 72a, 72b of the first and second sheet membranes, respectively to form an integral unit. This procedure forms a substantial cell-tight "dry" seal all around the peripheral abutting surfaces. Edge portion 71 may comprise a molded polyurethane or other thermoplastic material compatible for bonding with fitting 32 and sheet membranes 21a and 21b. Alternatively, the cell-tight dry seal may be formed by an adhesive which is biocompatible and substantially non-toxic, such as a light-curable acrylate polymer adhesive mentioned above.

Similar to the first configuration, the cell culture solution 24 may be disposed or deposited, through access port 34 in fitting 32, by inserting a syringe needle or the like through port 34 and into the cavity. After deposition of the living cells in cavity 23, any residual solution or contaminants which may have contacted bonding surface 38 of non-porous fitting neck portion 70 may be easily removed therefrom so that the surface becomes "dry".

As best viewed in FIGURE 12, plug member 35 is preferably provided by an end cap bonded or attached to bonding surface 38 at a distal end of neck portion 70.

Access port 34, hence, is fully sealed and living cells 24 are encapsulated in storage cavity 23 without affecting their viability. Alternatively, as previously indicated, port 34 may be sealed by applying an acrylic or the like into or over access port 34, or by placing a threaded plug member into port 34 (not shown). Further, fitting 32 may include a hub assembly (not shown), as mentioned above, having a seal member formed to receive a filling tube therethrough.

In another embodiment of the present invention, as shown in FIGURE 16, a bead of uncured adhesive may be provided around the outer periphery surface 82 of the hollow fiber membrane 21, proximate second open end 31, to form an adhesive ring 80 which cell-tight "dry" seals with the membrane once cured. After living cells are deposited in the storage cavity, using the above-mentioned techniques, a cell-tight "dry" seal over second open end 31 may be formed, once cured, by applying additional adhesive cap 81 around the end which bonds to adhesive ring 80.

In this arrangement, although adhesive ring 80 need not be fully cured when adhesive cap 81 is bonded thereto, it will be understood that adhesive ring 80 must be sufficiently cured to form cell-tight "dry" seal with the membrane.

In another aspect of the present invention, a method is provided for forming the hollow membrane device configuration which administers a biologically active product or function to an individual. The method comprises the steps of: (a) providing a fitting 32 including an access port 34 extending through the fitting from an outer surface 39 to an inner surface 48; and (b) providing a permselective, porous, membrane 21 having an interior surface 22 cooperating with

AUSTRALIAN PATENT OFFICE

fitting inner surface 48 to define at least a substantial portion of a storage cavity 23 therebetween. The next step includes: (c) forming a substantially cell-tight, first dry seal between the membrane 21 and an engaging surface 43 of fitting 32; and (d) filling or depositing in cavity 23, through access port 34, living cells 24 capable of secreting a biologically active product or of providing a selected biological function to an individual. The membrane permits the passage of substances between the individual and cells required to provide said biological product or function. The last step includes (d) forming a cell-tight second seal at fitting access port 34 by providing a plug member 35 formed to cooperate with a bonding surface 38 of fitting 32 to form a cell-tight sealing engagement therewith. As indicated above, the plug member may be provided by fusing the distal end together, sealing the end with a biocompatible adhesive, plugging the open bore with a mating plug or the like.

As best viewed in FIGURES 1A-1C, the filling step may be accomplished by passing a filler tube 54 through access port or open bore 34. Subsequently, lumen 23 may be filled with the living cell solution. Moreover, when a necked hub assembly 44 is provided, the present invention may include the additional steps of passing the filler tube 54 through seal member 50 and through passageway 46 and abutting a distal end 73 of filler tube 54 against an upwardly facing shoulder portion 74 defined by housing 45 and formed to seat filler tube 54 thereagainst. This prevents passage of filler tube 54 into the fitting open bore 34. After depositing the living cells 24 from the filler tube into cavity 23, breaking the frangible neck portion 55 at the frangible region to separate the hub assembly 44 from fitting 32 which causes exposure of the open bore. After

separating the hub assembly, providing the plug member 35 over the exposed open bore to cooperate with the bonding surface (distal fitting end 38 and/or fitting inwardly facing surface 33) of the fitting to form the cell-tight sealing engagement therewith.

Another method is provided for forming flat sheet encapsulation device 20 (FIGURE 12) to administer a biologically active product or function to an individual. The method comprises the steps of a) positioning a fitting 32 between first interior surface 22a, of first permselective porous membrane 21a, and second interior surface 22b, of a second permselective porous membrane 21b, and (b) forming a first substantially cell-tight dry seal between first membrane 21a and a first engaging surface 43a of fitting 32. The method further includes forming a second substantially cell-tight dry seal between second membrane 21b and a second engaging surface 43b of fitting 32. The fitting inner surface 48, first membrane interior surface 22a and second membrane interior surface 22b cooperate to define storage cavity 23 therein. Living cell solution 24 is then filled or deposited in storage cavity 23, through an access port 34 defined by fitting inwardly facing surface 33 which extends into cavity 23. The method includes forming a third seal at fitting access port 34 by providing a plug member 35 formed to cooperate with a bonding surface 38 of fitting 32 to form a substantially cell-tight sealing engagement therewith.

As provided by the present invention, the step of forming the first substantially cell-tight dry seal (b) and forming second substantially cell-tight dry seal (c) is performed by molding a thermoplastic edge member 71 around outer perimeter edges 72a, 72b, 68 of the first sheet membrane, the second sheet membrane and the

fitting, respectively. The molded edge member 71 molding perimeter edges together to form an integral unit and to provide the substantially cell-tight dry seal.

As previously mentioned, a tether portion may be included mounted to the fitting which functions to anchor the encapsulation device to the recipient with the aid of a suture, surgical staple or the like. As shown in FIGURE 17, tether portion 65 is mounted to an end of fitting 32 through the support of a tether connector 84 friction fit with the interior surfaces 33, 85 of the respective fitting 32 and tether 65. This arrangement permits the exterior or outer diameter of the tether to be substantially similar to the outer diameter of the fitting. Accordingly, this facilitates insertion of the encapsulation device through a cannula or the like. Further, lodging of the device on tissue during removal thereof can be minimized or reduced. Further, this arrangement may be incorporated on any of the other embodiments set forth above which include plug members.

In this embodiment, after the lumen has been loaded with cell solution (not shown) through open bore 34, one end of connector 84 may be friction fit in fitting bore 34 with an opposite end thereof protruding from the distal end of fitting 32. This connector opposite end is also dimensioned for friction fit into a bore 86 of tubular tether 65 to join the fitting to the tether. Hence, connector 84 not only forms a plug or cell-tight seal of bore 34, but also functions as a joining device with tether 65. Further, while the connector is preferably in frictional engagement with the interior surfaces of the tether bore and the fitting bore, it will be appreciated that the connector may be glued to

the fitting and the tether without departing from the true spirit and nature of the present invention.

Preferably, connector 84 is inserted into fitting bore 34 until a recess region 87 thereof is positioned at the juncture between the tether and the fitting. At this juncture, a biocompatible glue or adhesive 88 is preferably applied therebetween to further cell-tight seal bore 34, and fixedly mount or join the tether to the fitting. Recess region 87 is preferably annular shaped and forms a receptical for adhesive 88 to flow therein to contact the interior surfaces 33 and 85 of fitting bore 34 and tether bore 86.

Connector 84 preferably includes a series of rings 89 at the opposite end thereof which enhance friction fit mounting to the interior surface 85 forming tether bore 86. It will be appreciated that in the outer diameter of both ends of connector 84 are dimensioned slightly larger than the internal diameters of fitting bore 34 and tether bore 86 to enable friction fitting therebetween. The connector is relatively rigid to provide support between the fitting and the tether. Further, to enhance imaging of the device, connector 84 is preferably composed of a radio-opaque material such as titanium.

FIGURES 18A and 18B illustrate yet another embodiment of the encapsulation device 20 of the present invention, where tubular fitting 32 is generally flexible and is disposed on one open end 30 of membrane 21. Similar to other embodiments, flexible fitting 32 includes an inwardly facing surface 33 forming open bore 34, and an engaging surface 43 in a cell-tight "dry" sealing engagement with membrane 21 proximate the one open end 30. A bonding surface 75 and an abuttable surface 76 of the fitting cooperate therebetween, upon

the application of a solvent to the bonding surface and, optionally, the abuttable surface followed by the application of a washing fluid to the surfaces, to form a cell-tight "wet" sealing engagement upon contact of surfaces together to seal fitting open bore 34.

In the preferred form of this embodiment, fitting 32 is provided by a low durometer hardness polyurethane tubing such as TECOFLEX® by THERMEDICS®. Other suitable biocompatible polymers may include poly(methyl methyacrylate), polycarbonate, polypropylene, silicone or blends thereof.

As viewed in FIGURES 18A and 18B, engaging surface 43 of tubular fitting 32 faces outwardly and forms the substantial cell-tight "dry" seal with membrane interior surface 22. An adhesive layer, such as the two-part polyurethane adhesive (e.g., CasChem 2-part Vorite/Polycin Adhesive) or other biocompatible adhesive, is disposed between fitting engaging surface 43 and membrane interior surface 22 to promote the "dry" sealing. It will of course be appreciated that fitting 32, similar to the other embodiments, could be dry seal mounted to the exterior surface or the distal end of membrane 21 without departing from the true spirit and nature of the present invention.

The encapsulation device 20 includes a hollow fiber having at least on open end and at least one flexible fitting 32 or 32' to be cell-tight sealed. One of the two fittings may be either "wet" sealed or "dry" sealed prior to the deposition of the living cell solution 24. FIGURE 18B illustrates that inwardly facing surface 33 of fitting 32 includes both the bonding surface 75 and the abuttable surface 76 in opposed relation therebetween. Hence, after the solvent and washing fluid have been applied to the respective surfaces,

contact therebetween is accomplished by compressing the exterior surface of fitting 32 together.

Initially, the solvent will typically induce swelling in the polymer surface. Preferably, the solvent may be chosen as a sterilization liquid, such as a 70% ethanol solution, which partially dissolves the engaging and abuttable surfaces (i.e., interior surface 22) for melding. Exposure to the ethanol solution separates the polymer chains to permit melding of the opposing surfaces during curing. Other solvents, such as isopolypropanol, may be used depending upon which polymer is chosen to compose the fitting.

It will be understood that the solvent does not affect, or is a non-solvent to, the fiber membrane material. Hence, while the inwardly facing surfaces 33 (i.e., the bonding and abuttable surfaces) of the fitting 32 are dissolved, the interior surface 22 providing cavity 23 remain substantially uninfluenced by the solvent.

Preferably, the solvent is ultrafiltered through the pores of membrane 21 as the solvent passes through membrane cavity 23 to "wet" the inwardly facing surfaces. This is used to remove humectant from the pores and to sterilize the device before deposition of the living cell solution 24 therein.

Subsequent to the exposure of the surfaces to the solvent, the exposed surfaces are flushed with a washing fluid. This fluid is chosen as a non-solvent to the fitting which precipitates the dissolved exposed surfaces into a low density three-dimensional structure. In the case of TECOFLEX®, this causes the transparent tubing to turn milky-white in appearance. Such appearance results from the tubing precipitating out of solution into aggregates which diffract the

AUSTRALIAN PATENT OFFICE

visible light. Preferably, the washing fluid is water or a physiological buffer solution, such as Hanks Buffered Saline Solution.

The prepared fitting ends are then compressed or pinched together, by tweezers, pliers or the like, causing bonding surface 75 to contact abuttable surface 76. In turn, the contact of these low density surfaces allows significant chain interpenetration or "welding" into a permanent seamless homogeneous bulk material under aqueous conditions and without the application of heat.

It will be understood that a cell-tight seal may be formed by folding over or creasing flexible fitting 32 so that two exterior surfaces of the fitting (i.e., an exterior bonding surface and an exterior abuttable surface) come into contact for "welding".

A method is further provided for forming this sealed, implantable, hollow membrane encapsulation device 20 which includes: (a) providing a permselective hollow, porous, membrane 21 including an interior surface 22 defining a storage cavity 23 and one open end 30 providing access into the cavity 23; and (b) forming a cell-tight, first dry seal at open end 30 of membrane 21 between the membrane and an engaging surface 43 of a flexible fitting 32. The method further provides: (c) filling or depositing in cavity 23, through open bore 34, living cells capable of secreting a biologically active product or of providing a selected biological function to an individual; and (d) forming a cell-tight second seal at fitting open bore 34. This second seal is formed by: 1) exposing both the bonding surface 75 and the abuttable surface 76 of to a solvent; 2) after the exposing step, washing bonding surface 75 and abuttable surface 76 with a washing

AUSTRALIAN PATENT OFFICE

fluid; and 3) after the washing step, contacting the bonding surface 75 and the abuttable surface 76 together to form the cell-tight second seal to seal open bore 34.

Preferably, the exposing step and the washing step are accomplished by passing the solvent fluid and subsequently the washing fluid through the open bore of the first fitting 32, and through cavity 23 where it exits through the open pores. This procedure advantageously ultrafilters the fiber membrane.

Further, the exposing step and the washing step are preferably performed before the filling or depositing step so that after deposition of the living cell solution 24 into the cavity, the fitting can be pinched together for "wet" cell-tight sealing.

THE CLAIMS DEFINING THE INVENTION ARE AS FOLLOWS:

1. A sealed, implantable encapsulation device for providing a biologically active product or function to an individual, said encapsulation device comprising:

a permselective, porous membrane shaped so as to form a cell-impervious encapsulating enclosure including an exterior surface, an interior surface and an opening, said interior surface substantially defining a storage cavity and said opening providing open communication between said storage cavity and the exterior of said enclosure;

a non-permeable, non-porous fitting disposed within or about said opening so as to make a substantially cell-tight dry seal between said fitting and said enclosure, said fitting providing a cell-tight closure of said opening but further including an access bore therethrough providing open communication between said storage cavity and the exterior of said enclosure, dimensioned so as to permit introduction therethrough of living cells into said storage cavity;

living cells disposed in said storage cavity and capable of secreting a biologically active product or of providing a selected biological function to an individual after implantation, said membrane permitting passage therethrough of substances provided by said cells and required to provide said biological product or function; and

a non-permeable, non-porous plug member cooperating with the access bore of said fitting to form a cell-tight seal with said fitting to seal said access bore.

2. The encapsulation device as defined in Claim 1, wherein said fitting includes an access neck portion extending outwardly from said fitting exterior surface, said neck portion including an open bore therethrough, said open bore of said neck portion being aligned and contiguous with said access bore so as to define a passageway providing open communication between the exterior of said encapsulation device and the storage cavity, which passageway is dimensioned so as to permit introduction therethrough of living cells into said storage cavity.

AUSTRALIAN PATENT OFFICE

3. The encapsulation device as defined in Claim 1, comprising:

a first permselective, porous membrane having an interior surface and an exterior surface;

a second permselective, porous membrane in opposed relation to said first permselective, porous membrane, said second permselective, porous membrane also having an interior surface and an exterior surface;

a non-porous fitting disposed between said first and second permselective, porous membranes, which fitting is a thin annular ring-shaped member, said annular ring shape defining a fitting interior surface, a fitting exterior surface, a top circular edge, and a bottom circular edge, and wherein said first membrane interior surface contacts said top circular edge in a cell-tight dry seal with said top circular edge, and wherein said second membrane interior surface contacts said bottom circular edge in a cell-tight dry seal with said bottom circular edge, said fitting further having at least one access bore providing an opening between said fitting interior surface and said fitting exterior surface, whereby the interior surfaces of said first and second membranes, together with the interior surface of said fitting, define and enclose a storage cavity, to which said at least one access bore in said fitting provides open communication, said at least one access bore being dimensioned so as to permit introduction therethrough of living cells into said storage cavity;

living cells disposed in said storage cavity and capable of providing a biologically active product or of providing a selected biological function to an individual after implantation, said first and second membranes permitting passage therethrough of substances provided by said living cells and required to provide said biological product or function; and

a non-porous plug member disposed in or about said at least one access bore of said fitting to form a cell-tight seal with said fitting to seal said at least one access bore and to provide a cell-tight enclosure for said living cells.

4. The encapsulation device as defined in Claim 3, wherein said cell-tight dry seals between said first membrane, said second membrane, and said fitting are provided by a moulded edge member having an annular ring shape, disposed around outer perimeter edges of the first membrane, the second membrane and the fitting, said edge member molding said

STRALIAN PATENT OFFICE

perimeter edges of the first and second membranes and said fitting together to form an integral unit.

5. The encapsulation device as defined in Claim 1, wherein said membrane comprises a hollow fiber membrane and said fitting is annular.

6. The encapsulation device as defined in Claim 5, wherein said substantially cell-tight dry seal is formed between the outer surface of said annular fitting and the interior surface of an open end of said hollow fiber membrane.

7. The encapsulation device as defined in Claim 6, wherein said cell-tight dry seal is provided by an adhesive layer disposed between said fitting outer surface and said hollow fiber interior surface, prior to the introduction of living cells into said hollow fiber.

8. A sealed, implantable, hollow membrane encapsulation device for providing a biologically active product or function to an individual, said encapsulation device comprising:

a permselective hollow, porous membrane shaped so as to form a cell-impervious encapsulating enclosure including an exterior surface, an interior surface and at least one opening, said interior surface substantially defining a storage cavity and said at least one opening providing open communication between said storage cavity and the exterior of said enclosure;

sealing means at said at least one opening of said membrane including a non-permeable fitting contacting said at least one opening so as to make a substantially cell-tight dry seal between said fitting and said enclosure, said fitting further including an open bore extending therethrough, defining an inner surface of said fitting dimensioned so as to permit introduction therethrough of living cells into said storage cavity;

living cells disposed in said storage cavity capable of secreting a biologically active product or of providing a selected biological function to an individual, said membrane permitting passage therethrough of substances secreted by said cells and required to provide said biological product or function; and

AUSTRALIAN PATENT OFFICE

a non-permeable, non-porous plug member cooperating with at least a portion of the inner surface of said fitting so as to form a cell-tight seal closing said open bore.

9. The encapsulation device as defined in Claim 8, wherein said fitting is partly disposed within said opening such that a portion of the outer surface of said fitting contacts the interior surface of said enclosure and another portion of said fitting projects outwardly from said opening, and

said plug member contacts said fitting at the portion that projects outwardly from said opening, adjacent said open bore, to form said cell-tight seal.

10. The encapsulation device as defined in Claim 9, wherein said plug member comprises a biocompatible adhesive disposed on said outwardly projecting portion and over said open bore so as to seal said open bore.

11. The encapsulation device as defined in Claim 10, wherein said adhesive is a light curable acrylate.

12. The encapsulation device as defined in Claim 10, wherein said adhesive is a polyurethane adhesive.

13. The encapsulation device as defined in Claim 9, wherein said sealing means comprises a thermoplastic tubular fitting member, and wherein said plug member is formed by pinching and fusing the sides of said thermoplastic tubular fitting member together at a distal end of said member to form said cell-tight seal.

14. The encapsulation device as defined in Claim 13, wherein said thermoplastic tubular fitting member is composed of polyurethane.

15. The encapsulation device as defined in Claim 13, wherein said sealing means further includes an adhesive disposed over said pinched and fused distal end of said thermoplastic

AUSTRALIAN PATENT OFFICE

tubular fitting member.

16. The encapsulation device as defined in Claim 9, wherein said fitting is comprised of a deformable tubular material, and said plug member has a transverse cross-sectional area larger than the open bore transverse cross-sectional area, such that force-fit disposition of said plug member within said open bore results in a friction fit cell-tight barrier closing said open bore.

17. The encapsulation device as defined in Claim 16, wherein said plug member is substantially spherical in shape.

18. The encapsulation device as defined in Claim 16, wherein said tubular material is composed of a silicone.

19. The encapsulation device as defined in Claim 16, wherein said plug member is composed of stainless steel.

20. The encapsulation device as defined in Claim 16, wherein said plug member is composed of teflon.

21. The encapsulation device as defined in Claim 8, wherein said plug member contacts said inner surface of said fitting, thereby closing said open bore.

22. The encapsulation device as defined in Claim 21, wherein said open bore is tapered, and said plug member is conical in shape and formed for mating engagement with said open bore.

23. The encapsulation device as defined in Claim 8, wherein said sealing means further includes an intermediate adhesive layer disposed between said fitting and said membrane to form said cell-tight dry seal.

AUSTRALIAN PATENT OFFICE

24. The encapsulation device as defined in Claim 23, wherein said adhesive is a light curable acrylate.

25. The encapsulation device as defined in Claim 8, wherein said plug member is formed by in situ polymerization of a monomer in the open bore of said fitting.

26. The encapsulation device as defined in Claim 8, wherein said plug member has external screw threads formed to mate with corresponding screw threads on said interior surface of said fitting, whereby threaded engagement of said plug member with said interior surface provides a cell-tight seal.

27. The encapsulation device as defined in Claim 26, including a second sealing means comprising an adhesive disposed over said externally threaded plug member to form said cell-tight seal.

28. The encapsulation device as defined in Claim 8, wherein said plug member has a transverse cross-sectional area larger than the open bore transverse cross-sectional area, such that force-fit disposition of said plug member within said open bore results in a friction fit cell-tight barrier closing said open bore.

29. The encapsulation device as defined in Claim 8, wherein said plug member is formed of a polymeric elasticity memory material and is characterized by a first transverse cross-sectional area smaller than a transverse cross-sectional area of the open bore at a first temperature, and a second transverse cross-sectional area larger than a transverse cross sectional area of the open bore at a second temperature, said second temperature being the body temperature of an individual, such that disposition of said plug member within said open bore results in a friction fit cell-tight barrier closing said open bore at said second temperature.

AUSTRALIAN PATENT OFFICE

30. A sealed, implantable, hollow membrane encapsulation device for providing a biologically active product or function to an individual, said device comprising:

a permselective hollow, porous, membrane shaped so as to form a cell-impervious encapsulating enclosure including an exterior surface, an interior surface and first and second openings, said interior surface defining a storage cavity, said first and second openings providing open communication between said storage cavity and the exterior of said enclosure;

living cells disposed in said storage cavity capable of secreting a biologically active product or of providing a selected biological function to an individual, said membrane permitting passage therethrough of substances secreted by said cells and required to provide said biological product or function; and

first and second sealing means at said first and second openings, respectively, of said membrane, said second sealing means comprising a non-permeable, non-porous plug member of a larger transverse cross-sectional area than a transverse cross-sectional area defined by said membrane interior surface proximate said second opening, such that force-fit disposition of said plug member within said second opening prior to introduction of said living cells in said storage cavity results in a friction fit cell-tight dry seal closing said second opening.

31. The encapsulation device as defined in Claim 30, further comprising:

an intermediate adhesive layer disposed between said plug member and said membrane interior surface to form said cell-tight dry seal therebetween.

32. The encapsulation device as defined in Claim 31, wherein said plug member comprises a polymeric elasticity memory material and is characterized by a first transverse cross-sectional area at a first temperature that is smaller than said membrane cross-sectional area, and a second transverse cross-sectional area at a second temperature that is larger than said membrane cross- sectional area, said second temperature being the body temperature of an individual, such that disposition of said plug member within said second opening results in a friction-fit cell-tight barrier closing said second opening at said second temperature.

AUSTRALIAN PATENT OFFICE

33. The encapsulation device as defined in Claim 30, wherein said plug member includes an open bore extending through said plug member into said storage cavity, and said second sealing means further comprises a hollow tube in disposed within said open bore and projecting distally therefrom, wherein a cell-tight dry seal is formed between said open bore and said hollow tube, and wherein said encapsulation device further comprises a third sealing means disposed in a distal region of said hollow tube and forming a cell-tight seal therewith.

34. A prefilling assembly for forming a sealable, implantable, hollow membrane encapsulation device, comprising:

a permselective hollow, porous, membrane shaped so as to form a cell-impervious encapsulating enclosure including an exterior surface, an interior surface and at least one opening, said interior surface defining a storage cavity, and said at least one opening providing open communication between said storage cavity and the exterior of said enclosure;

a non-permeable, non-porous fitting disposed within or about said at least one opening so as to make a substantially cell-tight dry seal between said fitting and said membrane, said fitting including a frangible neck portion projecting outwardly from said at least one opening and having a central bore extending through said neck portion into said cavity, and a housing portion continuous with and extending outwardly from said neck portion and having a central passage in axial alignment with said central bore, wherein said central bore and aligned central passage provide open communication through said fitting with the exterior of said encapsulating enclosure, and wherein at least said central passage is dimensioned so as to permit insertion of a filler tube for introduction of materials through the central passage and central bore into said storage cavity.

35. A prefilling assembly as defined in Claim 34, wherein said fitting further includes a seal member dimensioned to fit within said central passage.

36. A prefilling assembly as defined in Claim 35, wherein the distal portion of the central passage widens to provide a generally cup-shaped cavity and wherein said seal member is dimensioned to snugly fit within said cup-shaped cavity so as to be stably retained within said

AUSTRALIAN PATENT OFFICE

cup-shaped cavity.

37. A prefilling assembly as defined in Claim 35, wherein said seal member has a hole therethrough which aligns with the central passage, which hole is dimensioned to snugly accommodate a filler tube, said hole having a diameter smaller than the external diameter of said filler tube.

38. A prefilling assembly as defined in Claim 37, wherein said seal member is composed of silicone.

39. A prefilling assembly as defined in Claim 37, wherein said fitting further includes a cap member dimensioned to snugly fit within said cup-shaped cavity and seat against said seal member, which cap member includes a port therethrough that aligns axially with the hole of said seal member.

40. A prefilling assembly as defined in Claim 34, wherein said frangible neck portion is constructed so as to permit the distal housing portion of said fitting to be broken off, thereby exposing a bonding surface that will accommodate a cell-tight seal closing the central bore of said neck portion.

41. A prefilling assembly as defined in Claim 40, wherein the central bore, the central passage, the hole and the port are axially aligned so as to permit guiding passage of a filler tube comprising a hypodermic syringe needle through the length of the fitting, so that the needle extends into said storage cavity.

42. A prefilling assembly as defined in Claim 41, wherein said seal member is a septum.

43. An implantable encapsulation device comprising: a tubular permselective hollow membrane having an exterior surface and an interior surface and having a closed end and an open end, the interior surface of said tubular permselective hollow membrane generally

AUSTRALIAN PATENT OFFICE

defining a storage cavity; a fitting disposed in or about said open end so as to form a cell-tight, dry seal between said fitting and the open end of said tubular permselective hollow membrane, said tubular permselective hollow membrane and said fitting together making said storage cavity a cell-tight enclosure; wherein at least a portion of said fitting is of a resilient, self-sealable material capable of permitting a syringe needle to penetrate therethrough to form an access port extending through said fitting, said material further being sufficiently resilient to cell-tight seal said access port upon withdrawal of said needle therefrom.

44. A method for forming a sealed, implantable, hollow membrane encapsulation device for providing a biologically active product or function to an individual, said method comprising the steps of:

(a) providing a permselective, porous, membrane shaped so as to form a cell-impervious encapsulating enclosure including an exterior surface, an interior surface and an opening, said interior surface substantially defining a storage cavity and said opening providing open communication between said storage cavity and the exterior of said enclosure;

(b) contacting said opening with a non-permeable, non-porous fitting in such a manner as to form a cell-tight dry seal between said fitting and said enclosure, wherein said fitting closes said opening and wherein said fitting is provided with an access bore extending therethrough, providing open communication between said storage cavity and the exterior of said enclosure and dimensioned so as to permit introduction therethrough of living cells into said storage cavity;

(c) depositing in said cavity, through said access port bore, living cells capable of secreting a biologically active product or of providing a selected biological function to an individual, said membrane permitting passage therethrough of substances secreted by said cells and required to provide said biological product or function; and

(d) contacting said access bore with a plug member shaped so as to cooperate with the access bore of said fitting and to form a cell-tight seal of said access bore.

45. A method for forming a sealed, implantable, hollow membrane encapsulation device for providing a biologically active product or function to an individual, said method

AUSTRALIAN PATENT OFFICE

comprising the steps of:

(a) providing a permselective, porous, membrane shaped so as to form a cell-impervious encapsulating enclosure including an exterior surface, an interior surface and an opening, said interior surface substantially defining a storage cavity and said opening providing open communication between said storage cavity and the exterior of said enclosure;

(b) contacting said opening with a non-permeable, non-porous fitting in such a manner as to form a cell-tight dry seal between said fitting and said enclosure, wherein said fitting closes said opening and wherein said fitting comprises a frangible neck portion in contact with said opening and a housing portion extending outwardly therefrom, said fitting having an access bore extending through said neck portion and a central passage extending through said housing portion, said access bore and said central passage being aligned so as to provide open communication between said storage cavity and the exterior of said enclosure, said fitting further comprising a seal member disposed within or about said central passage, said seal at least partly closing said central passage but being penetrable by a filler tube;

(c) inserting a filler tube through said seal member and at least partly through said central passage and, optionally, at least partly through said access bore;

(d) depositing in said cavity, through said filler tube, living cells capable of secreting a biologically active product or of providing a selected biological function to an individual, said membrane permitting passage therethrough of substances secreted by said cells and required to provide said biological product or function;

(e) withdrawing said filler tube;

(f) breaking off the housing portion of said fitting at the frangible neck portion, thereby exposing a bonding surface of said fitting; and

(g) contacting said bonding surface with sealing means so as to close the access bore of the neck portion and to form a cell-tight seal of said enclosure.

46. The method of Claim 45, wherein said sealing means comprises a plug member disposed at least partly within said access bore.

AUSTRALIAN PATENT OFFICE

47. The method of Claim 45, wherein the access bore of the frangible neck portion is of a smaller dimension than the filler tube, such that penetration of the filler tube into said neck portion of the fitting is prevented.

48. The method of Claim 45, wherein said filler tube comprises a syringe needle.

49. The method of Claim 45, wherein said sealing means includes a curable adhesive material disposed about said bonding surface so as to close said access bore and form a cell-tight seal.

50. The method of Claim 45, wherein said contacting step (g) is accomplished by melting at least a portion of said fitting to fill said access bore.

51. The method of Claim 50, further comprising the step of forming a protective cap external to said melted fitting by depositing a layer of curable adhesive material and causing it to solidify in situ.

52. The method of Claim 45, wherein said sealing means comprises a screw-threaded bolt and said access bore includes corresponding screw thread for accepting such a bolt.

53. The method of Claim 44 or 45, wherein said fitting is molded in situ directly to the opening of said membrane.

54. The method of Claim 45, wherein said sealing means comprises inserting a plug member and also adhesive material into said access bore.

55. The method of Claim 45, wherein said sealing means comprises fitting a cup-shaped end cap over said exposed bonding surface.

AUSTRALIAN PATENT OFFICE

56. The method of Claim 44 or 46, wherein said plug member is formed of a polymeric elasticity memory material and is characterized by a first transverse cross-sectional area, at a first temperature, smaller than a transverse cross-sectional area of the access bore, and a second transverse cross sectional area, at a second temperature, larger than the transverse cross-sectional area of the open bore, said second temperature being the body temperature of an individual.

57. The method of Claim 56, wherein said first temperature is room temperature.

58. A method of manufacturing a dry sealed, implantable, hollow membrane encapsulation device containing living cells, said method comprising:

(a) providing a capsule formed from a permselective, porous membrane, said capsule enclosing a storage cavity and having at least one opening to said storage cavity;

(b) disposing a non-porous, non-permeable fitting within or about said opening in such a manner as to form a cell-tight dry seal between said fitting and said opening, said fitting including an access bore therethrough providing open communication with said storage cavity;

(c) depositing living cells through said access bore into said storage cavity; and

(d) inserting a plug member into said access bore, said plug member being formed of a polymeric elasticity memory material and characterized by a first transverse cross-sectional area, at a first temperature, smaller than a transverse cross-sectional area defined by said access bore, and a second transverse cross-sectional area, at a second temperature, larger than said transverse cross-sectional area defined by said access bore, said second temperature being the body temperature of an individual,

whereby said plug member at said second temperature forms a cell-tight seal of said access bore.

59. The method of Claim 58, wherein said fitting includes a hollow tube portion extending outwardly from the portion of said fitting disposed within or about said opening.

AUSTRALIAN PATENT OFFICE

60. A sealed, implantable encapsulation device for providing a selected biologically active product or function to an individual, said encapsulation device comprising:

a first permselective, porous membrane having an interior surface and an exterior surface;

a second permselective, porous membrane in opposed relation to said first permselective, porous membrane, said second permselective, porous membrane also having an interior surface and an exterior surface;

a non-porous fitting disposed between said first and second permselective, porous membranes, said fitting having a fitting interior surface and a fitting exterior surface and having at least one access bore providing an opening between said fitting interior surface and fitting exterior surface, wherein said fitting contacts the respective interior surfaces of said first and second membranes to form a substantially cell-tight dry seal between said fitting and said first and second membrane interior surfaces, whereby the interior surfaces of said first and second membranes, together with the interior surface of said fitting, define and enclose a storage cavity, to which said at least one access bore in said fitting provides open communication, said at least one access bore being dimensioned so as to permit introduction therethrough of living cells into said storage cavity;

living cells disposed in said storage cavity and capable of secreting a biologically active product or of providing a selected biological function to an individual after implantation, said first and second membranes permitting passage therethrough of substances provided by said living cells and required to provide said biological product or function; and

a non-porous plug member disposed in or about said at least one access bore of said fitting to form a cell-tight seal with said fitting to seal said at least one access bore and to provide a cell-tight enclosure for said living cells.

61. The encapsulation device as defined in Claim 60, wherein said cell-tight dry seal between said first and second membranes and said fitting is provided by a thermoplastic molded edge member extending around outer perimeter edges of the first membrane, the sheet membrane and the fitting, said edge member molding said perimeter edges together to form an integral unit.

AUSTRALIAN PATENT OFFICE

62. The encapsulation device as defined in Claim 61, wherein said molded edge member is comprised of polyurethane.

63. The encapsulation device as defined in Claim 60, wherein said fitting is a thin annular ring-shaped member, said annular ring shape defining a fitting interior surface, a fitting exterior surface, a top circular edge, and a bottom circular edge, and wherein said first membrane interior surface contacts said top circular edge in a cell-tight dry seal with said top circular edge, and wherein said second membrane interior surface contacts said bottom circular edge in a cell-tight dry seal with said bottom circular edge.

64. The encapsulation device as defined in Claim 63, wherein said annular ring-shaped member is relatively flat.

65. The encapsulation device as defined in Claim 60, wherein said plug member comprises a biocompatible adhesive.

66. The encapsulation device as defined in Claim 65, wherein said adhesive is a light curable acrylate.

67. The encapsulation device as defined in Claim 65, wherein said adhesive is a polyurethane adhesive.

68. The encapsulation device as defined in Claim 60, wherein said fitting includes an access neck portion extending outwardly from said fitting exterior surface, said neck portion including an open bore therethrough, said open bore of said neck portion being aligned and contiguous with said access bore so as to define a passageway providing open communication between the exterior of said encapsulation device and the storage cavity, which passageway is dimensioned so as to permit introduction therethrough of living cells.

AUSTRALIAN PATENT OFFICE

69. The encapsulation device as defined in Claim 68, wherein said plug member is a cup-shaped member disposed over said passageway proximate the distal end of said neck portion to provide a cell-tight seal of said passageway.

70. The encapsulation device as defined in Claim 60, wherein said cell-tight dry seal further includes an intermediate adhesive layer disposed between said fitting and said first and second membrane interior surfaces.

71. The encapsulation device as defined in Claim 70, wherein said adhesive is a light curable acrylate.

72. A method for forming a sealed, implantable encapsulation device for providing a selected biological product or function to an individual, said method comprising the steps of:

(a) positioning a substantially non-porous spacer fitting, having an inner surface and an outer surface, and having at least one access bore providing an opening extending from said fitting inner surface to said fitting outer surface, between a first interior surface of a first permselective porous membrane and a second interior surface of a second permselective porous membrane;

(b) forming a first substantially cell-tight dry seal between said first membrane and a first engaging surface of said fitting;

(c) forming a second substantially cell-tight dry seal between said second membrane and a second engaging surface of said fitting, said fitting inner surface, said first membrane interior surface and said second membrane interior surface together defining a storage cavity therein;

(d) depositing in said storage cavity, through said at least one access bore, living cells capable of providing a selected biological product or function to an individual, said first and said second membranes permitting passage of substances between the individual and cells required to provide said biological product or function; and

(e) closing said at least one fitting access bore by disposing a plug member in or about said at least one access bore to form a substantially cell-tight seal of said opening.

AUSTRALIAN PATENT OFFICE

73. The method of Claim 72, wherein the steps of forming said first substantially cell-tight dry seal (b) and of forming said second substantially cell-tight dry seal (c) are performed by molding a thermoplastic edge member around outer perimeter edges of the first membrane, the second membrane and the outer surface of said fitting, said molded edge member molding said membrane perimeter edges and said fitting together to form an integral unit.

74. The method of Claim 73, wherein said fitting includes at least one access neck portion extending outwardly from said fitting exterior surface, said at least one neck portion including an open bore therethrough, said open bore of said neck portion being aligned and contiguous with said at least one access bore so as to define a passageway providing open communication between the exterior of said encapsulation device and the storage cavity, which passageway is dimensioned so as to permit introduction therethrough of living cells.

75. The method of Claim 73, wherein said depositing step (d) is performed by passing a filler tube through said at least one access bore proximate said storage cavity, and depositing said living cells from said filler tube into said storage cavity.

76. A sealed, implantable, encapsulation device for providing a biologically active product or function to an individual, said encapsulation device comprising:

a permselective, porous membrane shaped so as to form a cell-impervious encapsulating enclosure including an exterior surface, an interior surface and an opening, said interior surface substantially defining a storage cavity and said opening providing open communication between said storage cavity and the exterior of said enclosure;

a fitting disposed within or about said opening so as to form a substantially cell-tight dry seal between said fitting and said membrane, said fitting being made of a resilient, self-sealable material capable of permitting a syringe needle to penetrate therethrough to form an access port extending through said fitting, said material further being sufficiently resilient to cell-tight seal said access port upon withdrawal of said needle therefrom; and

living cells disposed in said storage cavity and capable of secreting a biologically active product or of providing a selected biological function to an individual, said membrane

AUSTRALIAN PATENT OFFICE

permitting passage therethrough of substances secreted by said cells and required to provide said biological product or function.

77. A method for forming a sealed, implantable hollow membrane encapsulation device, comprising the steps of:

(a) providing a permselective hollow, porous membrane shaped so as to form a cell-impervious encapsulating enclosure including an exterior surface, an interior surface and at least one opening, said interior surface defining a storage cavity and said at least one opening providing open communication between said storage cavity and the exterior of said enclosure;

(b) applying a first curable adhesive around an outer peripheral surface of said membrane proximate said at least one opening so as to form a bead extending completely around the periphery of said membrane;

(c) curing said first curable adhesive by an amount sufficient to form a substantially cell-tight dry seal between the outer peripheral surface of the membrane and said bead of curable adhesive;

(d) depositing in said storage cavity living cells capable of secreting a biologically active product or of providing a selected biological function to an individual, said membrane permitting passage therethrough of substances provided by said living cells and required to provide said biological product or function;

(e) applying a second curable adhesive so as to cover said at least one opening and to contact said bead; and

(f) curing said second curable adhesive to form a cap member which cooperates with said bead to form a cell-tight seal.

78. A method of depositing in a storage cavity of an implantable, hollow membrane encapsulation device living cells capable of providing a biologically active product or function to an individual, said encapsulation device including a permselective, porous membrane shaped so as to form an encapsulating enclosure characterized by a storage cavity and an opening, said device further comprising a non-porous, non-permeable fitting disposed within

AUSTRALIAN PATENT OFFICE

or about said opening in such a manner as to form a cell-tight dry seal between said fitting and said membrane, said fitting having an access port extending through said fitting and providing open communication between said storage cavity and the exterior of said device, said method comprising the steps of:

(A) passing a filler tube, dimensioned to extend through said access port, into said access port to a position proximate said storage cavity;

(B) depositing said living cells from said filler tube into said cavity;

(C) withdrawing said filler tube; and

(D) forming a cell-tight seal at said fitting access port by providing a plug member formed to cooperate with the access port of said fitting to form a cell-tight seal therewith.

79. The method of Claim 78, wherein said fitting further includes a frangible neck portion defining said access port and projecting outwardly from said device and a hub assembly coupled to said frangible neck portion suitable for accepting and guiding a filler tube adjacent said access port, which hub assembly can be separated from said fitting by breaking off the hub assembly at the frangible region of said frangible neck portion.

80. The method of Claim 79, wherein said fitting hub assembly is constructed to permit passage of a filler tube part way through said access port but not into said storage cavity.

81. The method of Claim 80, which further comprises the step, after step (C), of breaking off said hub assembly at said frangible neck portion to expose a bonding surface, wherein the cell-tight sealing step (D) is performed on said bonding surface.

82. A sealed, implantable encapsulation device for providing a biologically active product or function to an individual, said encapsulation device comprising:

a permselective hollow, porous membrane shaped so as to form a cell-impervious encapsulating enclosure including an exterior surface, an interior surface and at least one opening, said interior surface defining a storage cavity and said at least one opening providing open communication between said storage cavity and the exterior of said enclosure;

AUSTRALIAN PATENT OFFICE

a flexible fitting of non-permeable, non-porous material disposed within or about said at least one opening so as to make cell-tight dry sealing engagement with said membrane proximate said at least one opening, said fitting further including an inwardly facing surface defining an access bore extending into said storage cavity, dimensioned so as to permit introduction of living cells into said storage cavity;

living cells disposed in said cavity capable of secreting a biologically active product or of providing a selected biological function to an individual, said membrane permitting passage therethrough of substances secreted by said cells and required to provide said biological product or function;

wherein said fitting further comprising a bonding surface and an abuttable surface in opposed relation adjacent said access bore, the contact of said surfaces together following application of a solvent for said non-permeable, non-porous material to at least one of said surfaces forming a cell-tight seal and closing said access bore to the passage of said living cells.

83. The encapsulation device as defined in Claim 82, wherein said membrane comprises a hollow fiber membrane, and said fitting is tubular.

84. The encapsulation device as defined in Claim 83, wherein said tubular fitting is disposed within said at least one opening, such that an outer surface of said tubular fitting contacts an interior surface of said membrane to form a cell-tight dry seal of said at least one opening of said hollow fiber membrane enclosure.

85. The encapsulation device as defined in Claim 84, further comprising an intermediate adhesive layer between said fitting outer surface and said membrane interior surface.

86. The encapsulation device as defined in Claim 85, wherein said inwardly facing surface of said fitting includes said bonding surface and said abuttable surface in opposed relation.

AUSTRALIAN PATENT OFFICE

87. The encapsulation device as defined in Claim 86, wherein said fitting is composed of polyurethane.

88. The encapsulation device as defined in Claim 82, wherein said solvent is a swelling solvent and sterilization liquid for said bonding and abuttable surfaces of said fitting, and a non-solvent for said membrane.

89. The encapsulation device as defined in Claim 88, wherein said fitting is composed of polyurethane, and said solvent is ethanol.

90. The encapsulation device as defined in Claim 82, wherein said membrane includes two openings, and both said openings have a fitting disposed within each of said openings.

91. A method for forming a sealed, implantable, hollow membrane encapsulation device for providing a biologically active product or function to an individual, said method comprising the steps of:

(a) providing a permselective hollow, porous, membrane shaped so as to form a cell-impervious encapsulating enclosure including an exterior surface, an interior surface and at least one opening, said interior surface defining a storage cavity and said at least one opening providing open communication between said storage cavity and the exterior of said enclosure;

(b) disposing within or about said at least one opening a flexible fitting made of non-permeable, non-porous material and forming a cell-tight, first dry seal between said at least one opening of said membrane said flexible fitting, the fitting including an inwardly facing surface defining an open bore providing communication between the exterior of said enclosure and said cavity and further including, adjacent said open bore, a bonding surface and an abuttable surface in opposed relation;

(c) depositing in said cavity, through said open bore, living cells capable of secreting a biologically active product or of providing a selected biological function to an individual, said membrane permitting passage therethrough of substances secreted by said cells and

AUSTRALIAN PATENT OFFICE

required to provide said biological product or function; and

(d) exposing at least one of said bonding surface and said abuttable surface of said flexible fitting to a solvent for said material, then contacting said bonding surface and said abuttable surface together to form a cell-tight second seal which closes said open bore.

92. The method of Claim 91, wherein, after said exposing step, each surface thus exposed to a solvent is further exposed to a washing fluid before contacting said bonding and abuttable surfaces together.

93. The method of Claim 92, wherein said bonding surface and said abuttable surface in opposed relation are contacted by compressing said fitting until said bonding surface and said abuttable surface come together.

94. The method of Claim 92, wherein said solvent is a swelling solvent and sterilization liquid for said fitting but a non-solvent for said membrane, and said washing fluid is a precipitating solvent and a humectant removal liquid.

95. The method of Claim 94, wherein said fitting is composed of polyurethane, said solvent is ethanol, and said washing fluid is water.

96. The method of Claim 93, wherein said exposing steps are performed before said depositing step (c).

97. The method of Claim 92, wherein said exposing steps are accomplished by passing said solvent and said washing fluid through said open bore.

98. The method of Claim 97, wherein said solvent is a non-solvent to said membrane, and said solvent is ultrafiltered through the membrane.

AUSTRALIAN PATENT OFFICE

99. A sealed, implantable encapsulation device for providing a biologically active product or function to an individual, said encapsulation device comprising:

a permselective, porous membrane shaped so as to form a cell-impervious encapsulating enclosure including an exterior surface, an interior surface and an opening, said interior surface defining a storage cavity and said opening providing open communication between said storage cavity and the exterior of said enclosure;

a non-permeable, non-porous fitting disposed within or about said opening so as to form a substantially cell-tight dry seal between said fitting and said enclosure, said fitting further including an access bore therethrough, dimensioned so as to permit introduction of living cells into said storage cavity;

living cells disposed in said storage cavity and capable of secreting a biologically active product or of providing a selected biological function to an individual, said membrane permitting passage therethrough of substances secreted by said cells and required to provide said biological product or function;

a non-permeable, non-porous plug member disposed in or about the access bore of said fitting to form a cell-tight seal closing said access bore; and

a tether member coupled to said fitting.

100. The encapsulation device as defined in Claim 99, wherein said plug member includes a connector portion extending outwardly from said access bore, and said tether member includes a tether bore formed and dimensioned for sliding receipt of said connector portion therein.

101. The encapsulation device as defined in Claim 100, wherein one end of said plug member is frictionally engaged with said fitting within said access bore, and the connector portion of said plug member is frictionally engaged with said tether within said tether bore.

102. The encapsulation device as defined in Claim 101, wherein said connector portion includes at least one annular ring portion adapted for frictional engagement with said tether within said tether bore.

AUSTRALIAN PATENT OFFICE

103. The encapsulation device as defined in Claim 102, wherein said connector portion includes a plurality of spaced-apart annular ring portions adapted for frictional engagement with said tether within said tether bore.

104. The encapsulation device as defined in Claim 99, wherein said plug member is composed of a radio-opaque material.

105. The encapsulation device as defined in Claim 104, wherein said radio-opaque material is titanium.

106. The encapsulation device as defined in Claim 103, wherein said fitting and said tether are juxtaposed to form a juncture therebetween, and wherein a biocompatible adhesive is disposed within or about said juncture between said fitting and said tether.

107. The encapsulation device as defined in Claim 106, wherein said connector portion includes a recess region aligned with said juncture and formed for receipt of said adhesive therein.

108. The encapsulation device as defined in Claim 107, wherein said recess region is annular.

109. A sealed, implantable encapsulation device for providing a biologically active product substantially as hereinbefore described with reference to the accompanying drawings.

110. A prefilling assembly for forming a sealable implantable hollow membrane encapsulation device substantially as hereinbefore described with reference to the accompanying drawings.

111. A method for forming a sealed implantable hollow membrane encapsulation device for providing a biologically active product substantially as hereinbefore described with reference

AUSTRALIAN PATENT OFFICE

to the accompanying drawings.

112. A method of depositing living cells substantially as hereinbefore described with reference to the accompanying drawings.

DATED this 18th day of December, 1997

BROWN UNIVERSITY RESEARCH FOUNDATION
By its Patent Attorneys
DAVIES COLLISON CAVE

AUSTRALIAN PATENT OFFICE

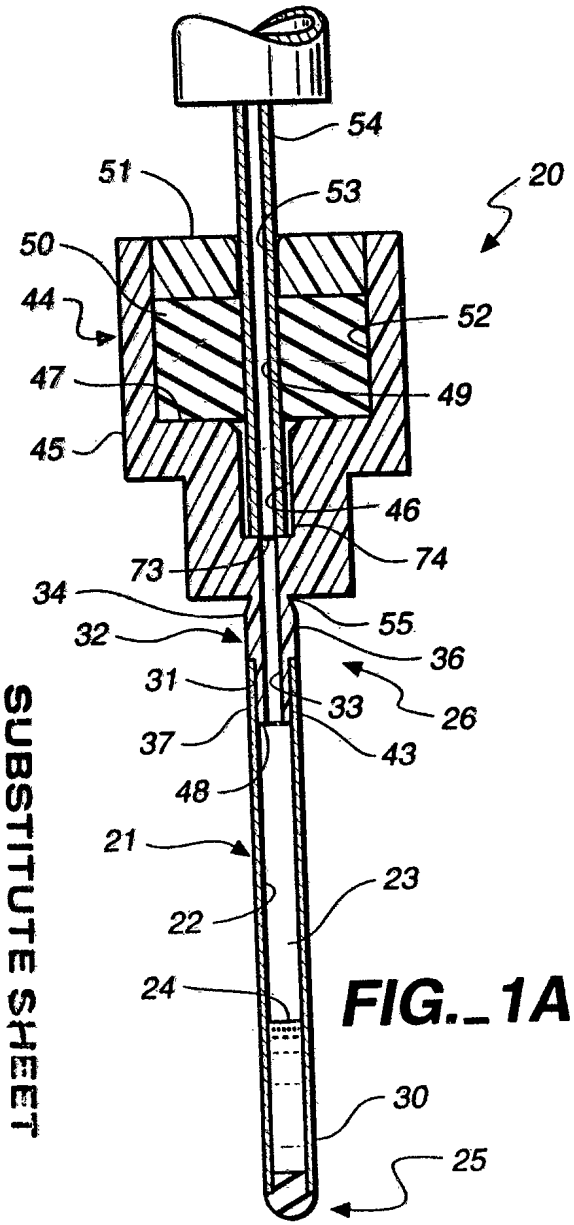

FIG._1A

FIG._1B

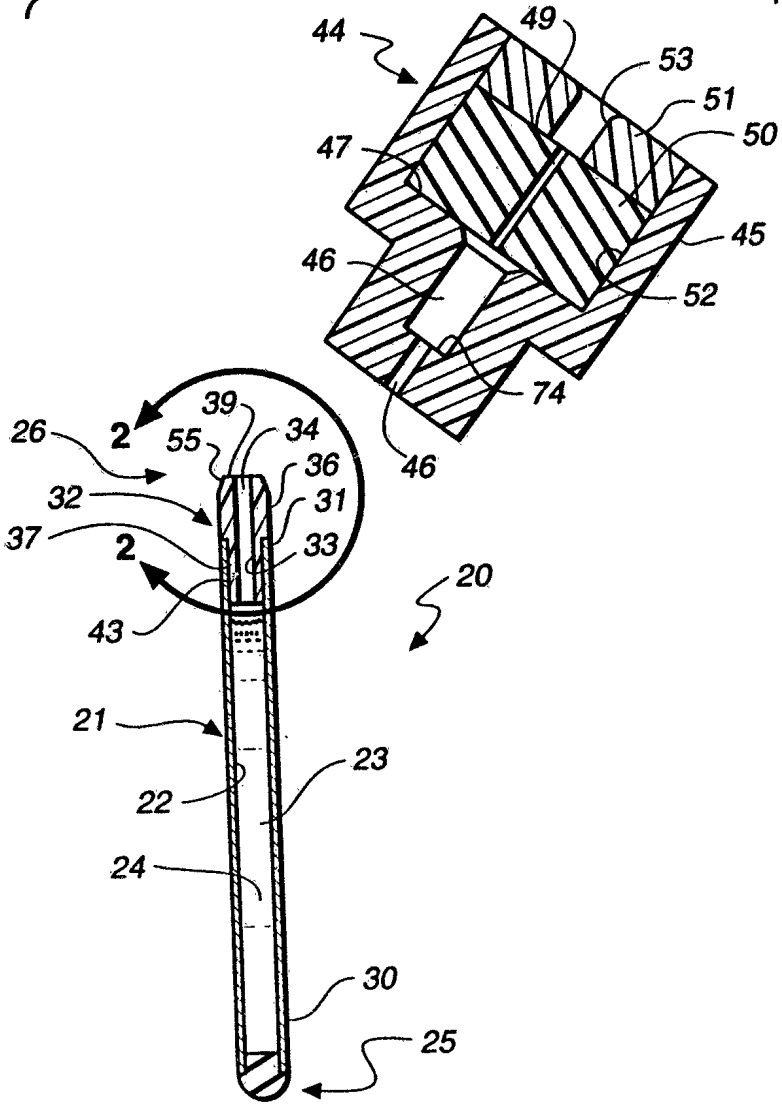

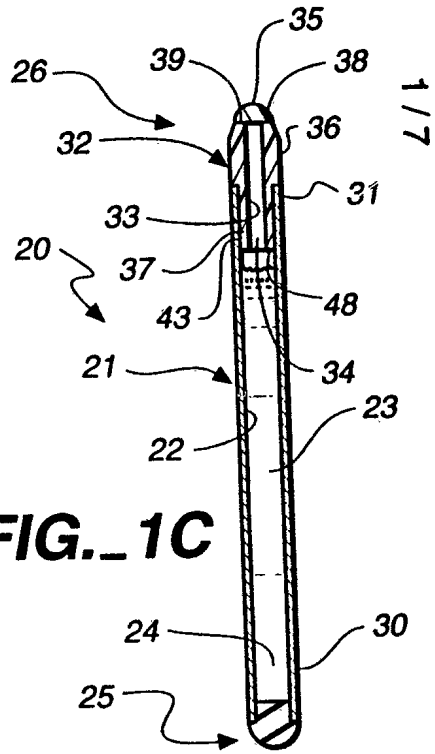

FIG._1C

SUBSTITUTE SHEET

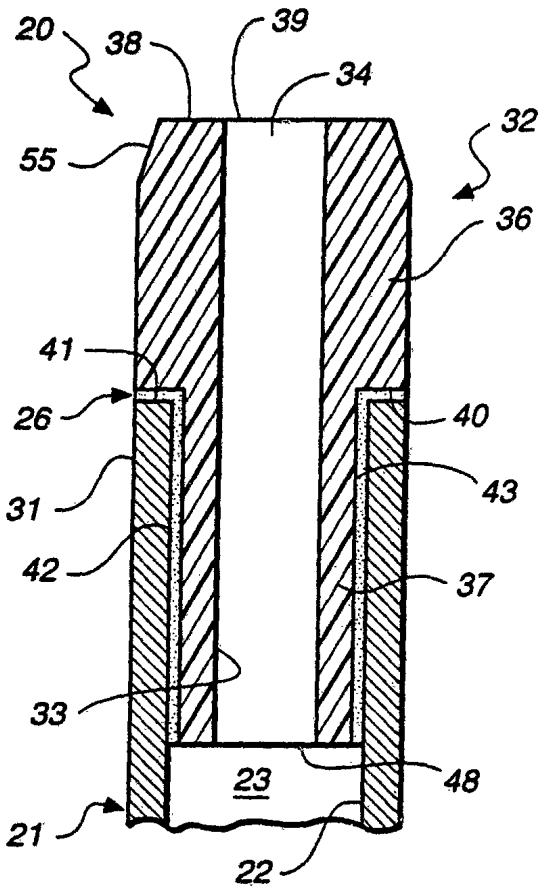

FIG._2

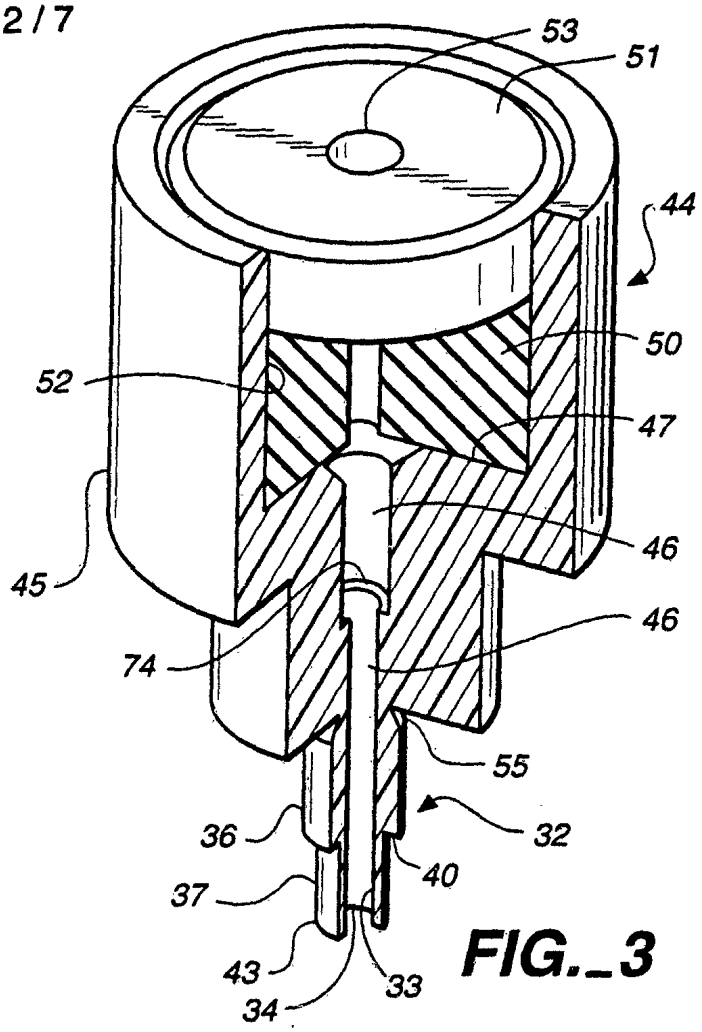

FIG._3

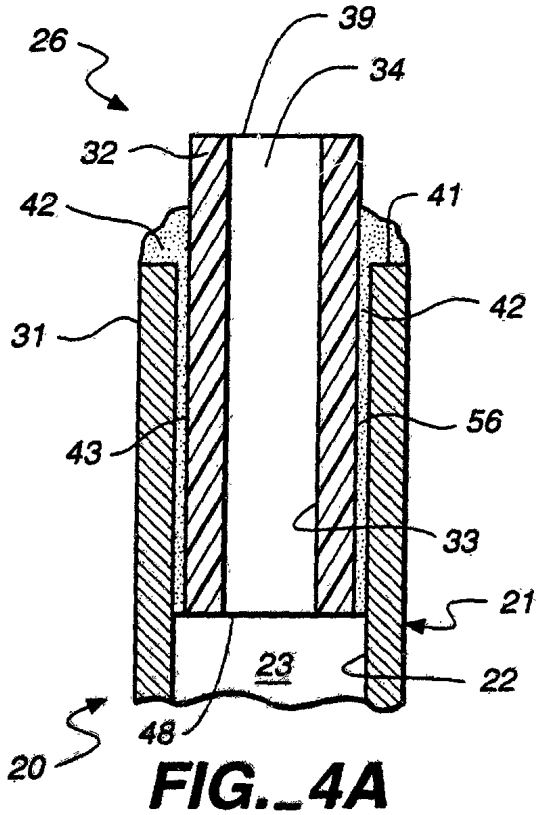

FIG._4A

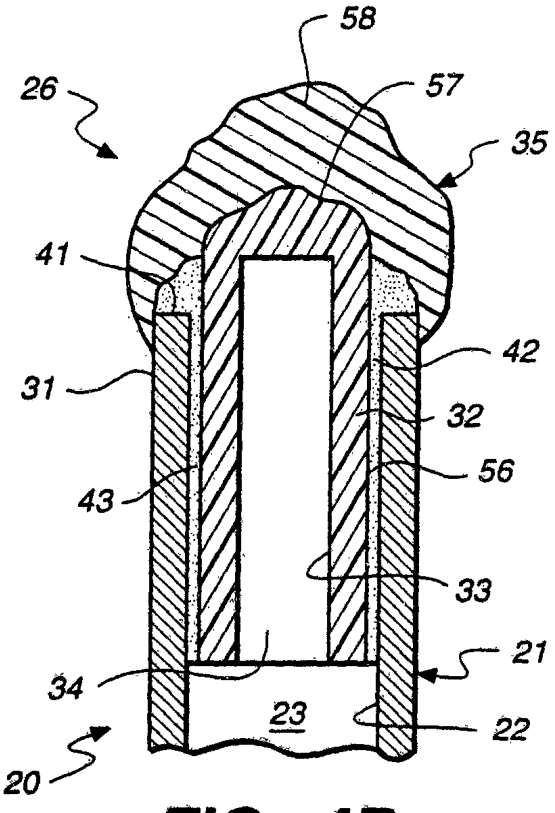

FIG._4B

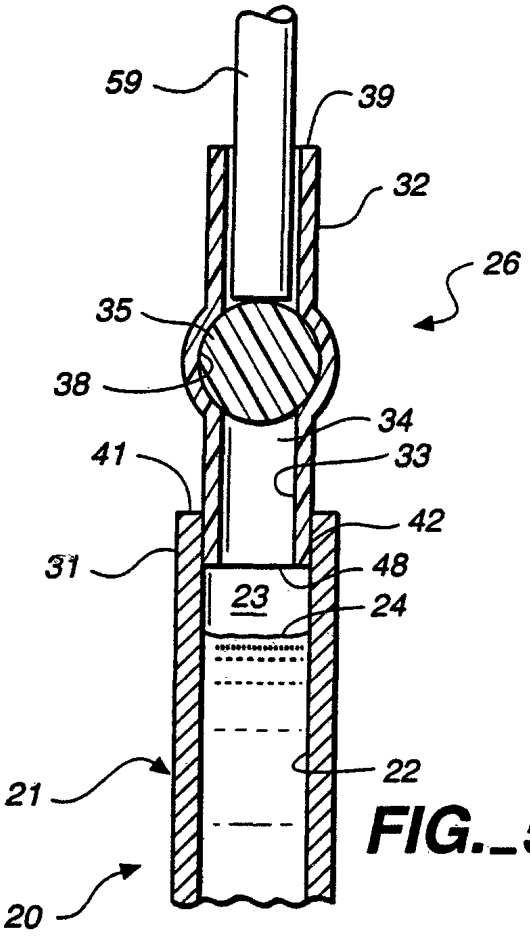

FIG._5A

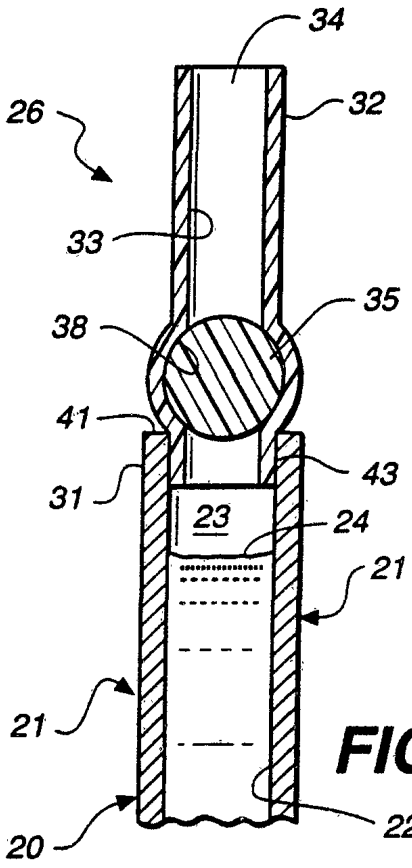

FIG._5B

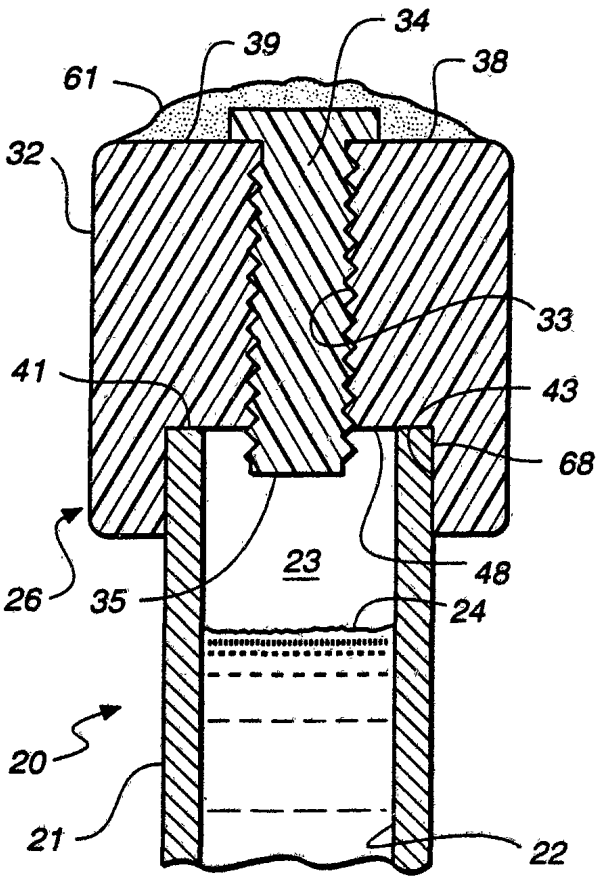

FIG._6

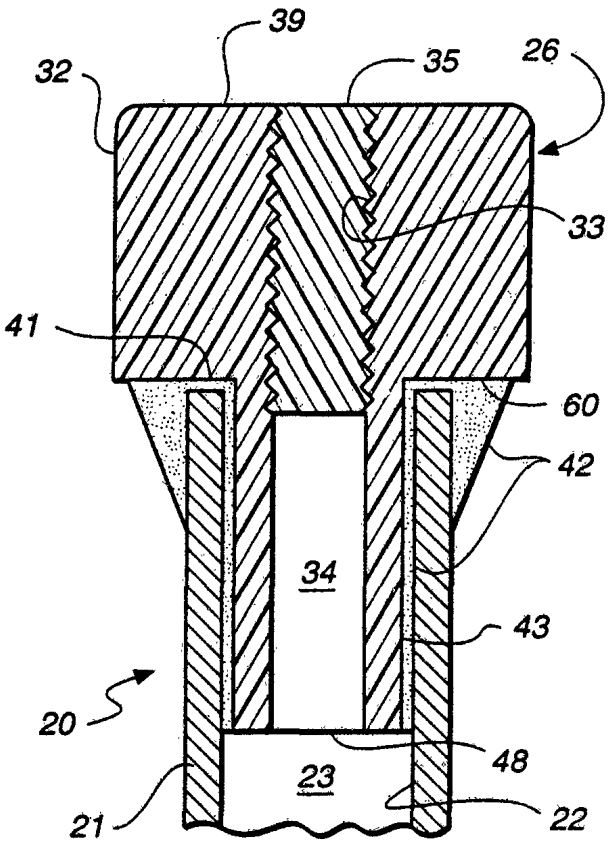

FIG._7

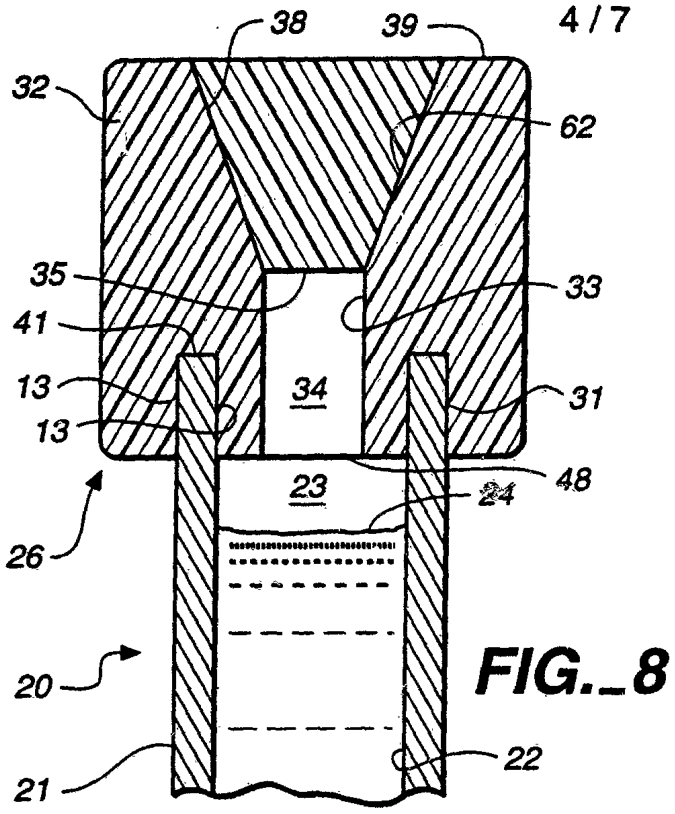

FIG._8

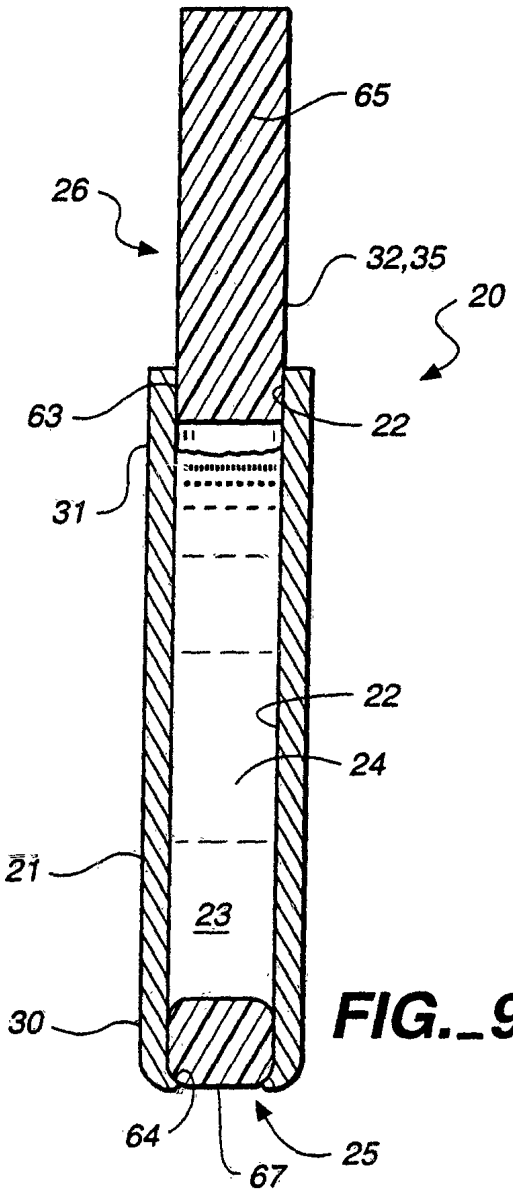

FIG._9

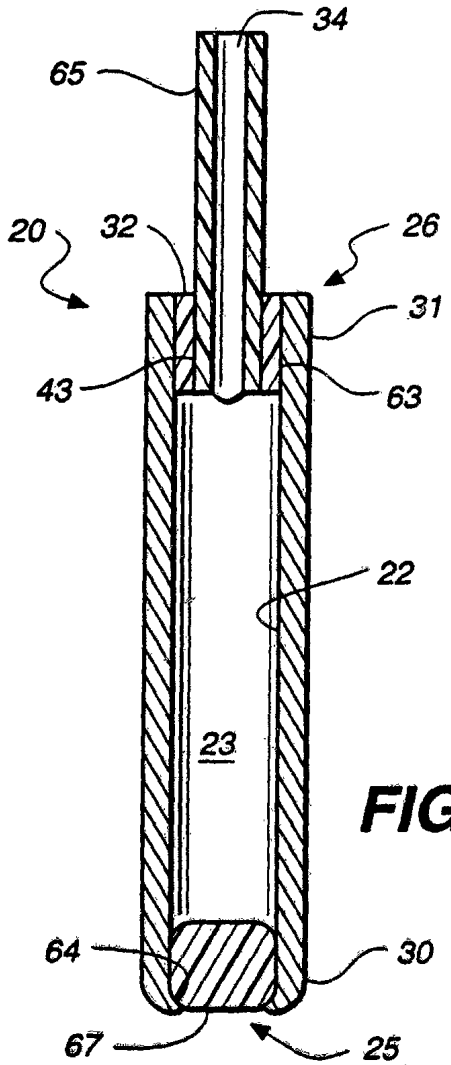

FIG._10

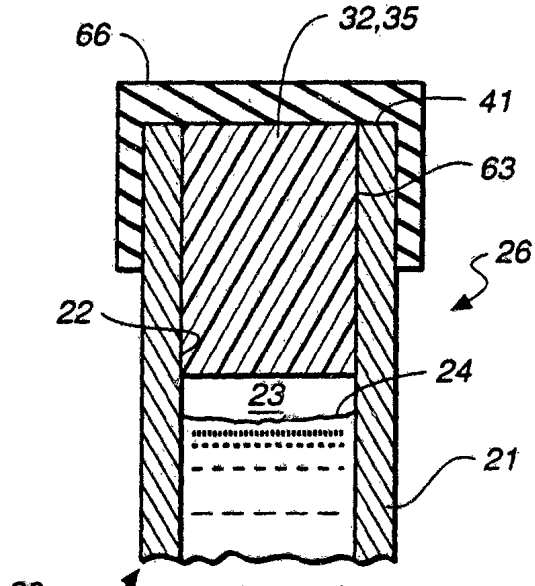

FIG._11

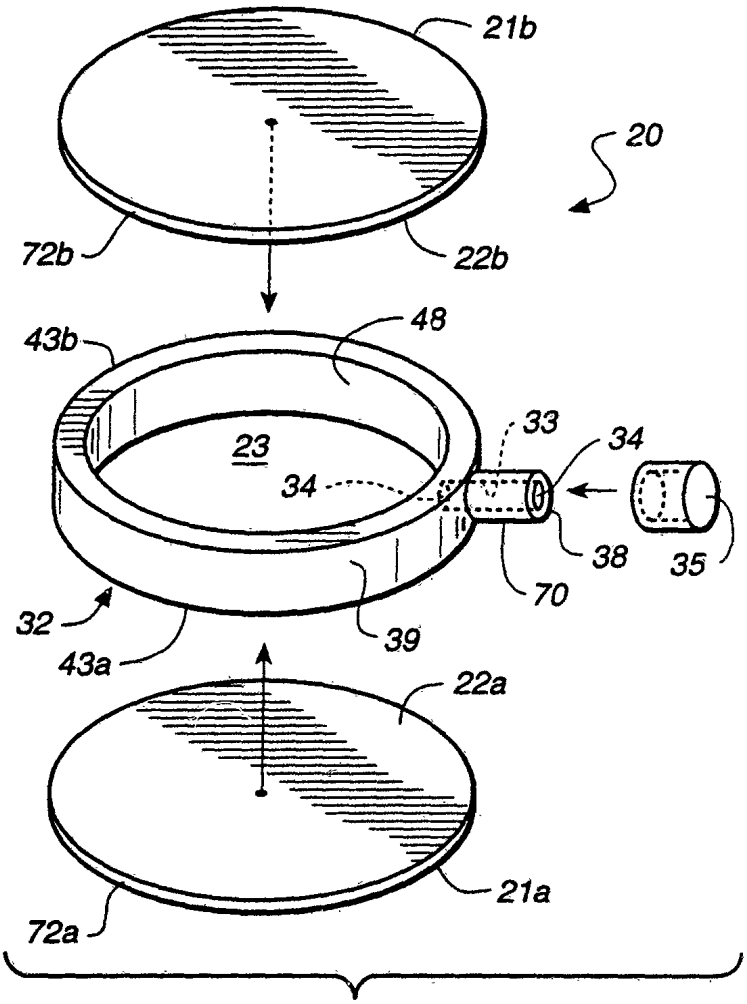

FIG._12

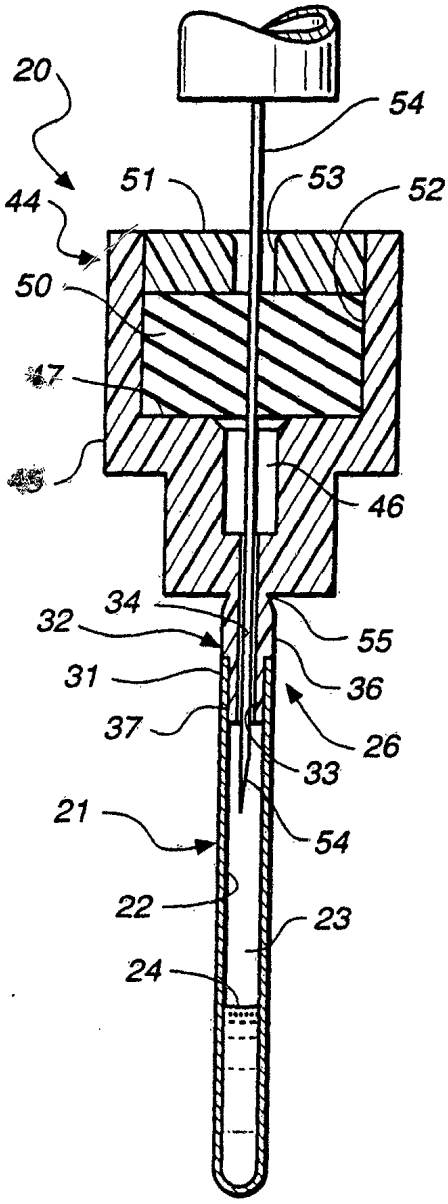

FIG._14

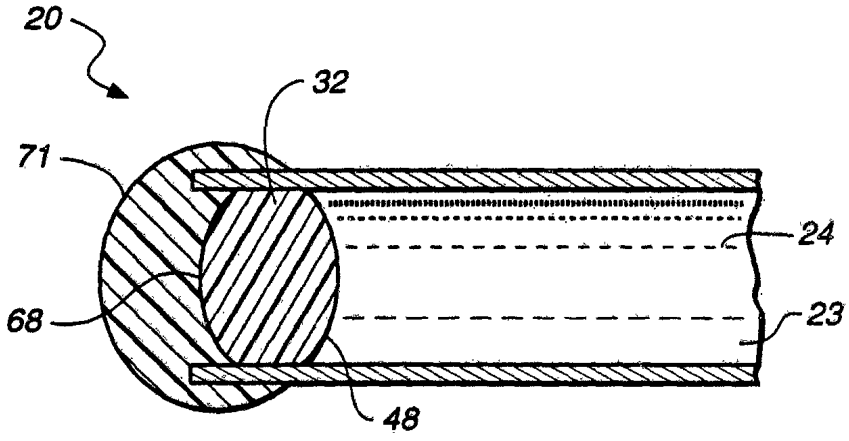

FIG._13

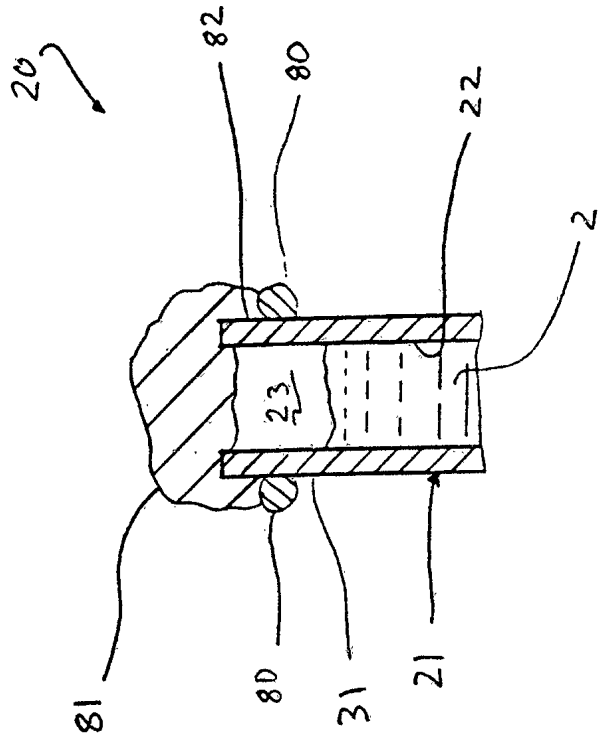

FIGURE 16

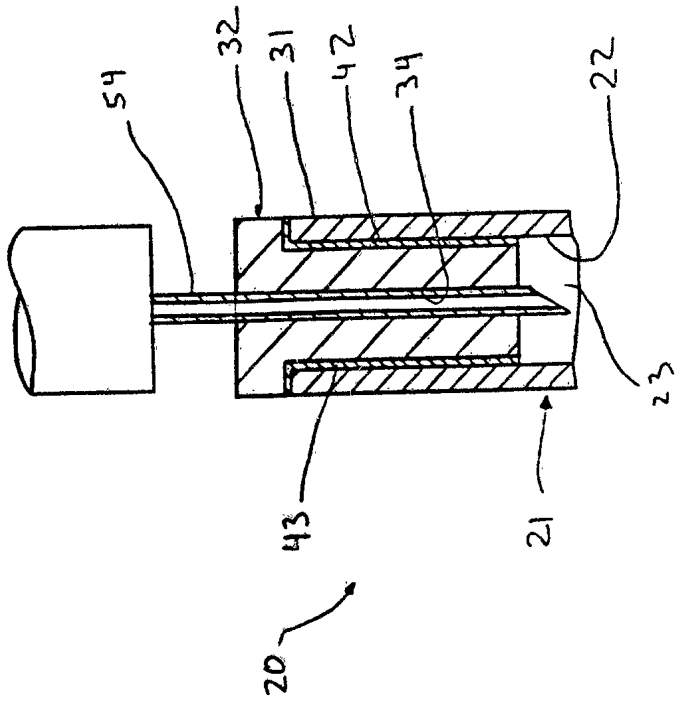

FIGURE 15

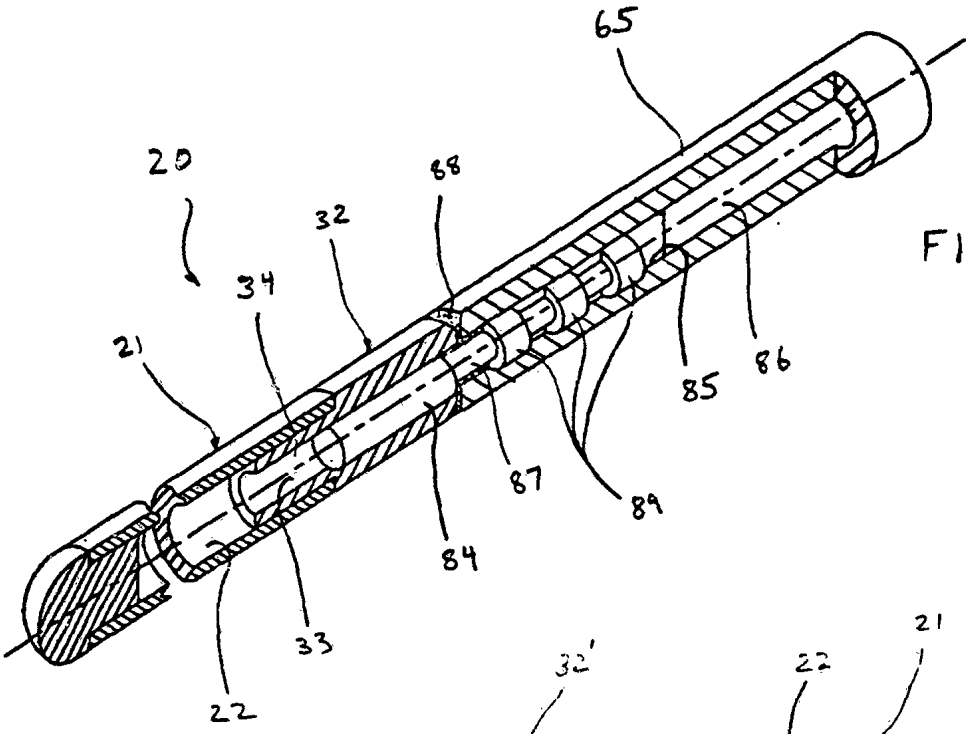

FIGURE 17

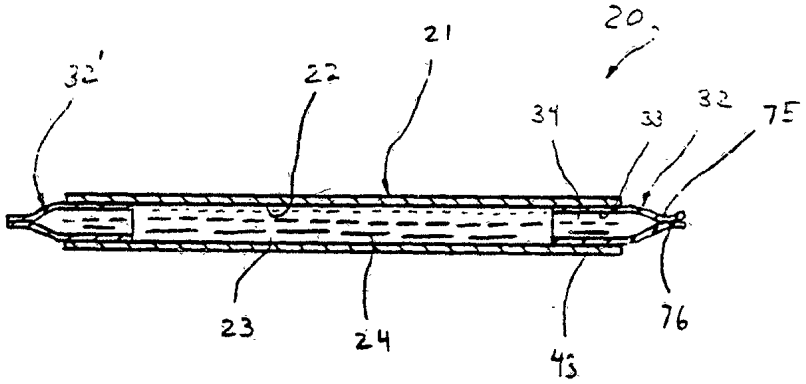

FIGURE 18B

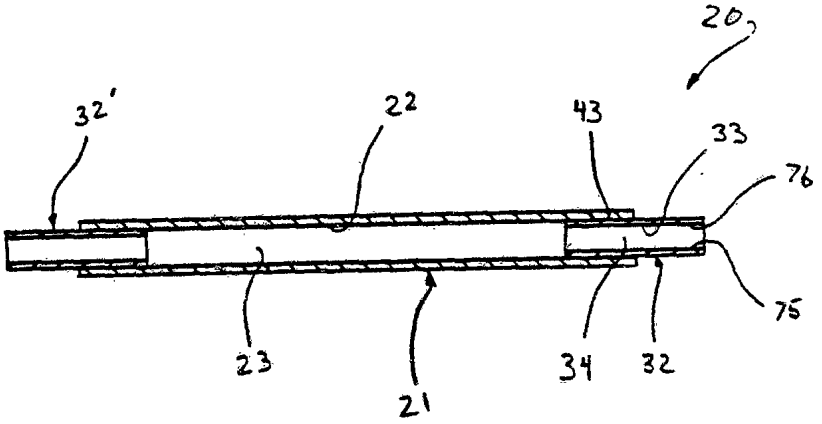

FIGURE 18A

INTERNATIONAL SEARCH REPORT

International application No.
PCT/US94/07015

A. CLASSIFICATION OF SUBJECT MATTER

IPC(5) :A61M 31/00
US CL :604/57

According to International Patent Classification (IPC) or to both national classification and IPC

B. FIELDS SEARCHED

Minimum documentation searched (classification system followed by classification symbols)

U.S. : 128/749-755, 762; 135/179, 180, 182, 240.22, 288; 264/4; 425/382.2; 604/8-10, 57, 93, 132, 175, 185, 890.1, 891.1

Documentation searched other than minimum documentation to the extent that such documents are included in the fields searched

NONE

Electronic data base consulted during the international search (name of data base and, where practicable, search terms used)

APS: Literature search,

C. DOCUMENTS CONSIDERED TO BE RELEVANT

Category*	Citation of document, with indication, where appropriate, of the relevant passages	Relevant to claim No.
X --- Y	US, A, 5,182,111, (AEBISCHER ET AL.), 26 January 1993. See entire document.	1, 8, 23-25, 29, 44, 45, 57 --- 2, 5-7, 9-12
Y	US, A, 4,402,694, (ASH ET AL.), 06 September 1983. See entire document.	2, 9-12
Y	US, A, 5,158,881, (AEBISCHER ET AL.), 27 October 1992. See entire document.	5-7

☐ Further documents are listed in the continuation of Box C. ☐ See patent family annex.

*	Special categories of cited documents:	"T"	later document published after the international filing date or priority date and not in conflict with the application but cited to understand the principle or theory underlying the invention
"A"	document defining the general state of the art which is not considered to be part of particular relevance	"X"	document of particular relevance; the claimed invention cannot be considered novel or cannot be considered to involve an inventive step when the document is taken alone
"E"	earlier document published on or after the international filing date	"Y"	document of particular relevance; the claimed invention cannot be considered to involve an inventive step when the document is combined with one or more other such documents, such combination being obvious to a person skilled in the art
"L"	document which may throw doubts on priority claim(s) or which is cited to establish the publication date of another citation or other special reason (as specified)	"&"	document member of the same patent family
"O"	document referring to an oral disclosure, use, exhibition or other means		
"P"	document published prior to the international filing date but later than the priority date claimed		

Date of the actual completion of the international search 26 OCTOBER 1994	Date of mailing of the international search report 12 JAN 1995
Name and mailing address of the ISA/US Commissioner of Patents and Trademarks Box PCT Washington, D.C. 20231 Facsimile No. (703) 305-3230	Authorized officer VANITHA ALEXANDER Telephone No. (703) 308-4987

Form PCT/ISA/210 (second sheet)(July 1992)*

INTERNATIONAL SEARCH REPORT

International application No.
PCT/US94/07015

Box I Observations where certain claims were found unsearchable (Continuation of item 1 of first sheet)

This international report has not been established in respect of certain claims under Article 17(2)(a) for the following reasons:

1. ☐ Claims Nos.:
because they relate to subject matter not required to be searched by this Authority, namely:

2. ☐ Claims Nos.:
because they relate to parts of the international application that do not comply with the prescribed requirements to such an extent that no meaningful international search can be carried out, specifically:

3. ☐ Claims Nos.:
because they are dependent claims and are not drafted in accordance with the second and third sentences of Rule 6.4(a).

Box II Observations where unity of invention is lacking (Continuation of item 2 of first sheet)

This International Searching Authority found multiple inventions in this international application, as follows:

Please See Extra Sheet.

1. ☐ As all required additional search fees were timely paid by the applicant, this international search report covers all searchable claims.

2. ☒ As all searchable claims could be searched without effort justifying an additional fee, this Authority did not invite payment of any additional fee.

3. ☐ As only some of the required additional search fees were timely paid by the applicant, this international search report covers only those claims for which fees were paid, specifically claims Nos.:

4. ☐ No required additional search fees were timely paid by the applicant. Consequently, this international search report is restricted to the invention first mentioned in the claims; it is covered by claims Nos.:

Remark on Protest

☐ The additional search fees were accompanied by the applicant's protest.

☐ No protest accompanied the payment of additional search fees.

BOX II. OBSERVATIONS WHERE UNITY OF INVENTION WAS LACKING
This ISA found multiple inventions as follows:

A. Figs. 1A-1C, 2 and 3, drawn to claims 1, 2, 5-12, 23-25, 34-40, 44-47, 49, 57 and 78-81, classified in Class 604, subclass 57.

B. Figs. 4A and 4B, drawn to claims 3, 4 and 13-16, classified in Class 604, subclass 57.

C. Figs. 5A and 5B, drawn to claims 16-21, classified in Class 604, subclass 57.

D. Fig. 6, drawn to claims 28, 30 and 31, classified in Class 604, subclass 57.

E. Fig. 7, drawn to claims 26 and 27, classified in Class 604, subclass 57.

F. Fig. 8, drawn to claim 22, classified in Class 604, subclass 57.

G. Fig. 9, drawn to claims 29, 32 and 33, classified in Class 604, subclass 57.

H. Fig. 11, drawn to claim 58, classified in Class 604, subclass 57.

I. Figs. 12 and 13, drawn to claims 60-71, classified in Class 604, subclass 57.

J. Figs. 14, drawn to claim 43, clasified in Class 604, subclass 57.

K. Fig. 15, drawn to claim 76, classified in Class 604, subclass 57.

L. Fig. 17, drawn to claims 99-108, classified in Class 604, subclass 57.

M. Figs. 18A and 18B, drawn to claim 82-98, classified in Class 604, subclass 57.