AUSTRALIA 632740

Patents Act 1990

PATENT REQUEST: PETTY PATENT

We, being the persons identified below as the Applicant, request the grant of a patent to the person identified below as the Nominated Person, for an invention described in the accompanying Petty complete specification.

Full application details follow.

[71] Applicant: MACHINE DEVELOPMENT CENTRE PTY. LTD.
A.C.N. 011 041 366

Address: Unit 3, 52 Pritchard Road, Virginia, Queensland, 4034, Australia

[70] Nominated Person: MACHINE DEVELOPMENT CENTRE PTY. LTD.

Address: Unit 3, 52 Pritchard Road, Virginia, Queensland, 4034, Australia

[54] Invention Title: AN IMPROVED WRAPPING MACHINE

[72] Name of actual inventor: THOMAS JOHN DEKKER

[74] Address for service in Australia:

Cullen & Co.
Patent & Trade Mark Attorneys
240 Queen Street
Brisbane, Qld, 4000
Australia Attorney Code: CU

ASSOCIATED PROVISIONAL APPLICATION DETAILS
[60] Application Number and Date: PK9275 filed 4 November 1991

TICK IF APPLICABLE
☐ I am an eligible person described in Sections 33-36 of the Act.

☐ For the purposes of Section 40, the specification relies on Section 6 of the Act (Microorganisms).

Drawing number recommended to accompany the abstract: 1

DATED this fourth day of November 1992

MACHINE DEVELOPMENT CENTRE PTY. LTD.

By: 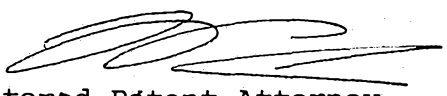

Registered Patent Attorney

TO: THE COMMISSIONER OF PATENTS
AUSTRALIA

Section 29(1)
Regulation 3.1(2)

AUSTRALIA

PATENTS ACT 1990

NOTICE OF ENTITLEMENT

We, MACHINE DEVELOPMENT CENTRE PTY. LTD. of Unit 3, 52 Pritchard Road, Virginia, Queensland, 4034, Australia being the applicant in respect of the attached application, state the following:-

The person nominated for the grant of the patent has entitlement from the actual inventor. The invention was made by the actual inventor in the course of his employment with the nominated person.

The person nominated for the grant of the patent is the applicant of the provisional application listed on the patent request form.

MACHINE DEVELOPMENT CENTRE PTY. LTD.
By their Patent Attorneys
CULLEN & CO.

C.P. ANESE

Date: 4 November, 1992

AU9228109

(12) PATENT ABRIDGMENT (11) Document No. AU-B-28109/92
(19) AUSTRALIAN PATENT OFFICE (10) Acceptance No. 632740

(Australian Petty Patent)

(54) Title
GANTRY WRAPPING MACHINE CONTROLLED BY OPTICAL SENSORS

International Patent Classification(s)
(51)[5] B65B 057/12 B65B 011/18

(21) Application No. : 28109/92 (22) Application Date : 04.11.92

(30) Priority Data

(31) Number	(32) Date	(33) Country
PK9275	04.11.91	AU AUSTRALIA

(43) Publication Date : 07.01.93

(45) Publication Date of Granted Application : 07.01.93

(71) Applicant(s)
MACHINE DEVELOPMENT CENTRE PTY. LTD.

(72) Inventor(s)
THOMAS JOHN DEKKER

(74) Attorney or Agent
CULLEN & CO , GPO Box 1074, BRISBANE QLD 4001

(57) Claim

1. Apparatus for wrapping an object, the apparatus comprising a wrapper carriage adapted to hold a supply of wrapping material, and means for moving the wrapper carriage around the sides of the object so as to wrap the object with the wrapping material, characterised in that the apparatus further comprises sensing means for detecting the boundaries of the object, and control means responsive to the sensing means for controlling the movement of the carriage such that the carriage moves automatically around the boundaries of the object.

632740

AUSTRALIA

Patents Act 1990

COMPLETE SPECIFICATION
FOR A PETTY PATENT

Name of Applicant: MACHINE DEVELOPMENT CENTRE PTY. LTD.

Actual Inventor: THOMAS JOHN DEKKER

Address for Service: CULLEN & CO.,
Patent & Trade Mark Attorneys,
240 Queen Street,
Brisbane, Qld. 4000,
Australia.

Invention Title: AN IMPROVED WRAPPING MACHINE

Details of Associated Provisional Application: No. PK9275 filed 4 November 1991

The following statement is a full description of this invention including the best method of performing it known to us:

THIS INVENTION relates to improved wrapping apparatus. In particular, the invention is directed to a machine for automated stretch-wrapping of objects, particularly of rectangular shape, the machine being able to cater for relatively large objects and objects of various sizes.

Throughout this specification, the term "object" is intended to mean an article, or collection of articles, intended to be wrapped by encircling with a strip or band of wrapping material, typically but not necessarily, in a stretch-wrapping procedure.

There are various known wrapping machines, and such machines can generally be characterised into two types. In the first type of wrapping machine, the object to be wrapped is rotated. In such a machine, the object is usually placed on a rotatable horizontal platform and the leading end of a roll of wrapping material is affixed to the object. As the platform rotates, the object wraps itself with wrapping material unrolled from a spool fixed in position horizontally, but rotatable about a vertical axis. Typically, the roll of wrapping material is moved vertically during the rotation of the platform so that the object is wrapped along its complete height.

An obvious disadvantage of this first type of wrapping machine is that it is generally unsuitable for large or heavy objects which cannot be rotated easily. The machine is particularly unsuitable for elongate objects, such as stacks of elongate sheets, as the machine must have a minimum directional clearance equal to the largest diagonal dimension

of the object to be wrapped.

In the second type of wrapping machine, the object is held in a fixed position while it is encircled by a wrapper containing a roll of wrapping material, which may also be moved vertically to provide height coverage. Typically, the wrapper is mounted on a radius arm. This type of machine is also not particularly suitable for large objects since the maximum diagonal dimension of the object is limited to being less than the diameter of the swept circular path of the rotating wrapper. To cater for large objects, a large structure with a long rotational arm must be provided, adding to costs.

Another inherent problem associated with both types of wrapping machines is that, since the objects to be wrapped are generally rectangular in plan shape, the circular application of wrap material to a rectangular object results in cyclic velocity changes in the wrap feed, and hence tension variations in the final wrap package.

Yet another disadvantage of known wrapping machines is that they are generally designed to wrap objects of a specific size, or within a relatively narrow range of sizes. Such machines cannot readily adjust to wrap objects of varying size, particularly large objects, or they require substantial and expensive modifications to wrap such large objects.

It is an objective of the present invention to provide an improved wrapping machine which overcomes, or substantially ameliorates, the abovedescribed disadvantages.

In one broad form, the present invention provides apparatus for wrapping an object, the apparatus comprising a

wrapper carriage adapted to hold a supply of wrapping material, and means for moving the wrapper carriage around the sides of the object so as to wrap the object with the wrapping material, characterised in that the apparatus further comprises sensing means for detecting the boundaries of the object, and control means responsive to the sensing means for controlling the movement of the carriage around the boundaries of the object.

Typically, the sensing means comprises an optical sensor which detects the position of each side of the object. The optical sensor may suitably be located above the object, or to the side thereof. In the preferred embodiment, the optical sensor is located on the wrapper carriage above the object to be wrapped.

In the majority of cases, the object is of square or rectangular shape (in plan), and the control means is responsive to the sensing means to move the wrapper carriage around the object in a rectilinear path. In this manner, the wrapper carriage will follow the plan outline of the object and the wrapping material will be applied with substantially constant velocity, and hence tension, to the object.

Typically, the supply of wrapping material comprises a strip or band of stretch-wrapping material of predetermined width in roll form.

The wrapper carriage suitably includes a wrap feed portion which is adapted to unwind the wrapping material from the roll and apply it at a predetermined angle to the side of the object with a predetermined tension. The means for moving the wrapper carriage is controlled so that when the wrapper

carriage is moved around a corner of the object, the angle of the wrapper carriage, and hence its wrap feed portion, is also changed to ensure that the wrap is applied to the new side of the object at substantially the same angle as the previous side. This facility not only compensates for the rotation of the wrapper carriage relative to the object as it is moved around the object, but also ensures that the wrap is applied to the object in a uniform manner.

Typically, the means for moving the wrapper carriage comprises an overhead gantry which is programme controlled in response to the sensor to move the wrapper carriage around the boundaries of the stationary object. That is, the gantry is controlled to move the wrapper carriage in two orthogonal directions (the X and Y axes), typically in the horizontal plane. The gantry mechanism is particularly suitable for rectilinear movement. (However, any curved path can be achieved using a combination of movements in the X and Y axes).

The wrapper carriage suitably includes a mechanism for moving the wrap feed in the vertical direction (i.e. the Z axis) so that the application of the wrapping material may be varied along the height of the object.

As the object to be wrapped remains stationary, and since the wrapper carriage is moved by an open-ended overhead gantry system, the wrapping apparatus of this invention is particularly suitable and advantageous for large and/or heavy objects. Further, the wrapping apparatus of this invention easily accommodates objects of different sizes. The sensing means automatically locates the boundaries of the object, and

the wrapping machine automatically adjusts to the size of the particular object to be wrapped.

In order that the invention may be more fully understood and put into practice, a preferred embodiment thereof will now be described with reference to the accompanying drawings, in which:

Fig. 1 is a plan view of the wrapping machine according to one embodiment of this invention;

Fig. 2 is a side elevation of the machine of Fig. 1;

Fig. 3 is an end elevation of the machine of Fig. 1;

Fig. 4 is an elevational view of the wrapper carriage of Fig. 1;

Figs. 5, 6 and 7 are schematic plan views of the wrapper carriage of Fig. 1 illustrating the sequential steps of its rotation about a corner of the object being wrapped.

The wrapping machine of the illustrated embodiment is designed for stretch-wrapping an object with a band or strip of plastic material fed from a roll. The machine is particularly suitable for stretch-wrapping objects having a square or rectangular plan shape, the wrapping material being wound around the vertical side faces of the object to form a continuous cover over the full height of the sides of the object. The tension imparted to the wrapping material and the inherent self-sticking properties of the material determine the tightness of the wrap.

The wrapping machine includes a gantry-type arrangement comprising a frame 10 on which a pair of spaced parallel rails 11 are mounted at an elevated position. A gantry bridge 12 spans between the rails 11 and is movable

therealong by motor 14. Typically, the motor 14 drives a chain and sprocket assembly which moves the bridge 12 along rails 11, but any suitable driving mechanism may be used.

A wrapper carriage 13 is mounted for movement along on the bridge 12 and depends downwardly from the bridge 12. Motor 15 is used to drive a chain and sprocket assembly which moves the wrapper carriage 13 along rails mounted on the bridge 12 in a direction orthogonal to the rails 11, but again any suitable driving mechanism may be used.

Movement of the bridge 12 along the "X" axis defined by the direction of the rails 11 in combination with the movement of the wrapper carriage 13 along the "Y" axis defined by the rails on the bridge 12 permits the carriage 13 to be moved in the X-Y plane around an object 16 to be wrapped, as illustrated schematically in Fig. 1. However, any other suitable transport system providing for variable movement of the carriage within the X-Y plane may be used. The movement of the bridge 12 and the carriage 13 are both programme controlled by electronic or computer-based control means (not shown).

The object 16 may suitably be moved into position within the gantry frame 10 by a conveyor 17. Thus, large heavy objects may be moved mechanically into the wrapping position in a simple and convenient manner. Further, after wrapping the object 16 may be moved to a delivery position by conveyor 17.

As shown in more detail in Fig. 4, the wrapper carriage 13 comprises a horizontal arm 18 having one end rotatably mounted to the bottom of a leg 19 depending from

that part of the carriage which rides on bridge 12. A motor 20 mounted on leg 19 drives a sprocket 21 which engages a gear ring 22 fixed relative to arm 18. In this manner, the horizontal arm 18 may be rotated about a vertical axis by motor 20.

A post 23 dependent from the distal end of the horizontal arm 18 carries a roll of wrapping material 24. The roll 24 is mounted on a lead screw within post 23 which, when rotated by motor 30 under programme control, causes the roll of wrapping material 24 to be displaced vertically. In this manner, the wrapping material can be moved along the "Z" axis.

The wrapper carriage 13 also comprises a wrap feed portion 25. The wrap feed typically comprises a plurality of tensioning rollers 26 which are located substantially in a plane that is orientated, in use, at a predetermined angle to the surface of the object 16 to be wrapped. The wrap feed 25 can be rotated incrementally by servo motor 20 about the vertical axis to orientate it at the desired angle to the object being wrapped.

The wrapping machine is therefore a four axis manipulator, having the ability of moving the wrap feed in the X, Y and Z linear axes, and also of rotating the wrap feed about a rotational axis.

The wrapper carriage 13 also comprises an optical sensor 27 which is positioned a short distance ahead of the rotational axis of the arm 18 in the direction of travel of carriage 13, and offset to the side thereof overlying the object 16. The output of sensor 27 is connected to the control means. Slip rings 31 allow power to be supplied to

motors 20, 30 and to the sensor 27 while the carriage 13 travels along bridge 12.

The operation of the machine will now be described with particular reference to Figs. 5 to 7. Initially, the lead end of the wrap 24 is temporarily held against the side of the object 16 at the desired starting position, e.g. by a pneumatic clamp. The wrapper carriage 13 is moved in the X direction by motor 15 as shown in Fig. 5 under programme control. The wrap material is unwound from the roll 24, through the tensioning rollers 26 of the wrap feed 25, and rolled out alongside the side face of object 16. As the wrapper carriage 13 moves along the X axis, the optical sensor 27 passes over the object 16, as can be seen in Fig. 5.

When the optical sensor 27 passes over a top side edge of the object 16, as illustrated in Fig. 6, its detection of the object boundary is recognised by the control means which stops the travel of the wrapper carriage 13 in the X direction. (To compensate for the inertia of the wrapper carriage 3, two spaced sensors may be used. Upon the leading sensor detecting the object boundary, the speed of the wrapper carriage 13 is reduced such that, upon the trailing sensor detecting the boundary, the wrapper carriage 3 can be stopped quickly).

The servo motor 20 is then actuated by the control means to rotate the arm 18, and hence the roll 24 and wrap feed 25, through 90° so that the wrap feed is again orientated at the same angle to the next side face of the object 6. (For non-rectangular objects, the angular change may be determined by sensor 27). The wrapper carriage 3 is then moved in the Y

direction by motor 14, as illustrated in Fig. 7, to wrap the second side of the object 16. This process is repeated as the wrapper carriage 13 circumscribes object 16 by automatically following the sides of the object with appropriate rotation at its corners, as illustrated schematically in Fig. 1. The rotation of the wrapper carriage 13 also prevents the wrap feed from being itself entangled in the wrap.

Concurrently with the control routine which controls the X and Y direction movement of the wrapper carriage 13, is a routine which raises or lowers the wrap feed 25 in the Z or vertical axis. The rate of rise and fall, which will determine the amount of overlap between successive layers of the wrap material, is controlled by a programmable logic control and selectable by the operator.

Various wrapping procedures may be used to obtain full height wrapping of the object 16. For example, in its first wrapping cycle around the object 16, the wrapper carriage 13 is normally positioned at the bottom of the object. At the commencement of the second encircling cycle, the height of the wrap feed 25 (and roll 24) is increased by the desired amount in a gradual manner. For example, the height may be increased 100mm over a horizontal displacement of 600mm. The height of the wrap feed 25 is then kept constant for the remainder of the second cycle, and increased in a similar manner at the commencement of each further cycle. Alternatively, the control means can be programmed to increase the height of the wrap feed 25 at the start of each side of the object, or gradually over the entire cycle.

Preferably, the wrap feed 25 also includes a

horizontal optical sensor (not shown) which detects the top edge of the object 16. On detection of the top edge of the object, the wrapper carriage 13 and wrap feed 25 are controlled to perform a complete wrap around the upper periphery of the object. The height of the wrap feed 25 is then lowered as the carriage 13 continues to encircle the object, the rate of descent being selectable by the operator. For example, the wrap feed 25 may be lowered at the same rate as it was increased, or the wrap feed 25 may be lowered to the bottom of the object in a single rotation around the object.

After the object has been wrapped to the desired degree, the wrap 25 is cut, e.g. by a heated wire or cut bar 28, and preferably press sealed against the underlying wrap material on the object. The new leading edge of the wrap roll is typically held by a vacuum pad 29 at the leading end of the wrap feed 25 for commencing the wrapping of the next successive object.

The foregoing describes only one embodiment of the invention, and modifications which are obvious to those skilled in the art may be made thereto without department from the scope of the invention as defined in the following claims. For example, although the invention has been described with particular reference to its application to the wrapping of a square or rectangular object, it may also be used to wrap objects of other shapes as it automatically follows the shape of the object. Further, the optical sensor may be substituted by any other suitable sensing means for detecting the boundary of the object to be wrapped.

THE CLAIMS DEFINING THE INVENTION ARE AS FOLLOWS;

1. Apparatus for wrapping an object, the apparatus comprising a wrapper carriage adapted to hold a supply of wrapping material, and means for moving the wrapper carriage around the sides of the object so as to wrap the object with the wrapping material, characterised in that the apparatus further comprises sensing means for detecting the boundaries of the object, and control means responsive to the sensing means for controlling the movement of the carriage such that the carriage moves automatically around the boundaries of the object.

2. Apparatus as claimed in claim 1, wherein the sensing means comprises an optical sensor for detecting the boundaries of the object, the optical sensor being mounted on the wrapper carriage.

3. Apparatus as claimed in claim 1 or 2, wherein the wrapper carriage depends from, and is movable along, a gantry bridge member which is supported at its ends on a pair of spaced rails mounted on a gantry frame in an elevated position, the bridge member being movable along the rails, the apparatus further comprising means for rotating the wrapper carriage about a vertical axis by a predetermined angle when the wrapper carriage moves around a corner of the object.

DATED this fourth day of November 1992

MACHINE DEVELOPMENT CENTRE PTY. LTD.

By their Patent Attorneys

CULLEN & CO.

ABSTRACT

A wrapping machine, particularly suitable for large objects, comprises a gantry-like arrangement formed by a gantry bridge (12) moveable along a pair of spaced elevated rails (11) supported by an open frame (10). A wrapper carriage (13) depends from the gantry bridge (12) and is movable along the bridge. The wrapper carriage (13) carries a wrap roll (24) and wrap feed (25) which are both moveable vertically and rotatable about a vertical axis. An optical sensor located on the wrapper carriage detects the boundaries of an object (16) to be wrapped. In use, the wrapper carriage is moved under software control to circumscribe the object (16) located within the frame (20) to thereby wrap it with material from the wrap roll, the wrap roll and feed being rotated as required as the wrapper carriage circumscribes the object so that the wrap feed applies the material at a substantially constant angle to the side of the object.

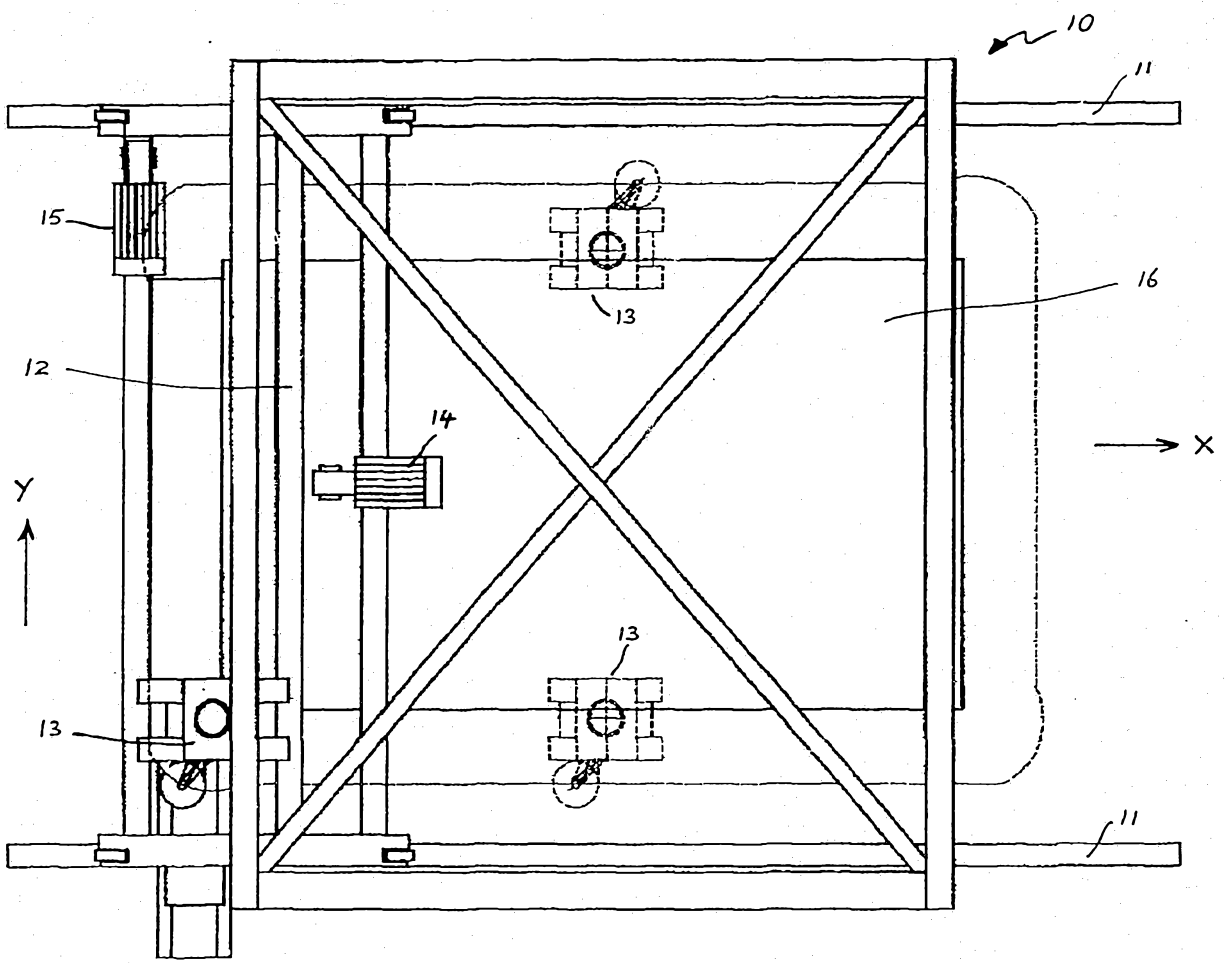

Fig. 1

28/09/92

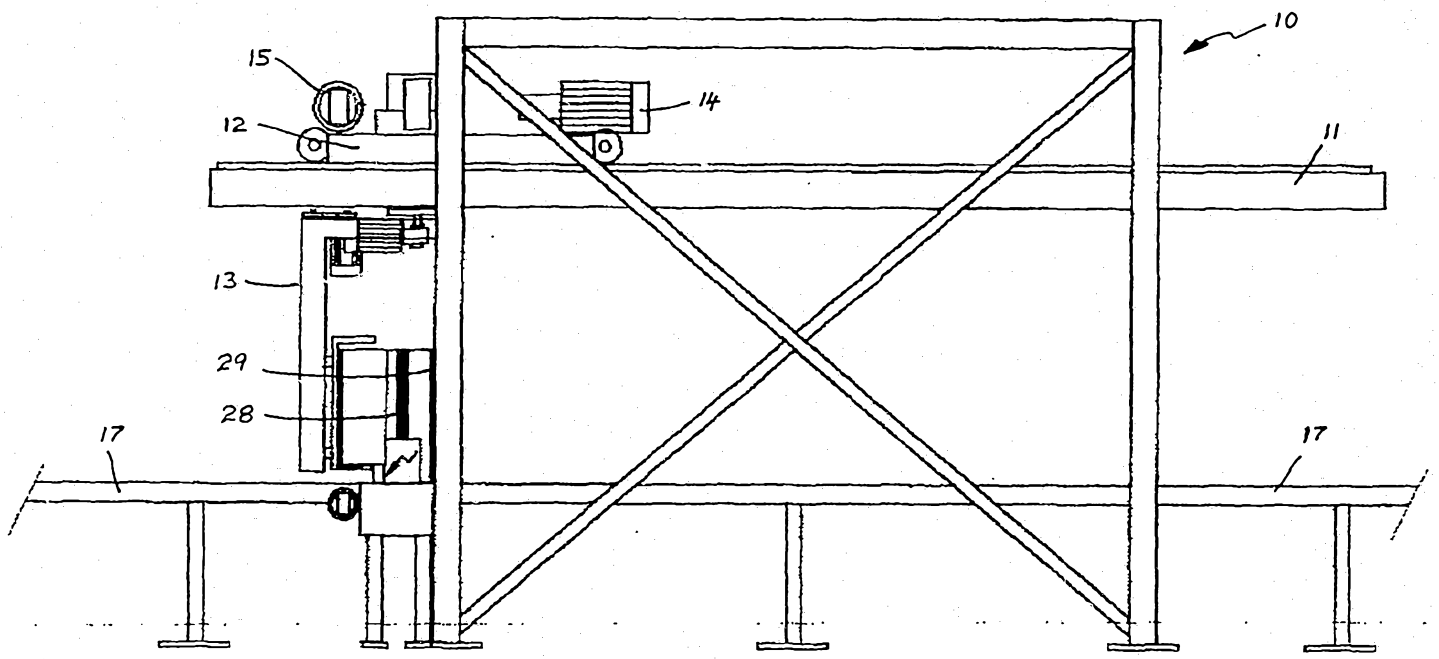

Fig. 2

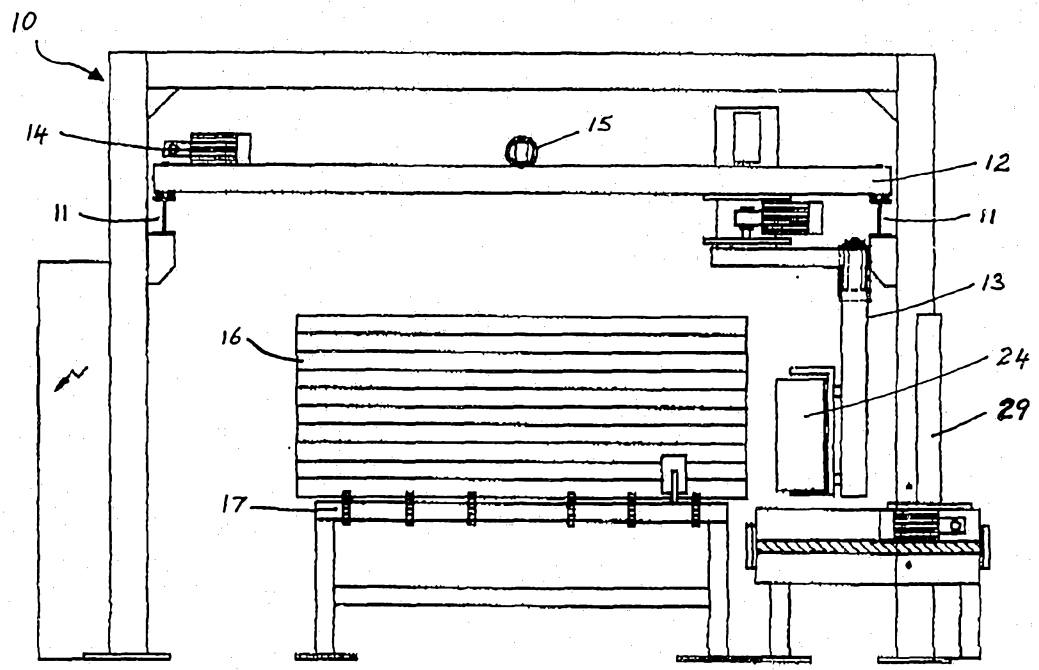

Fig. 3

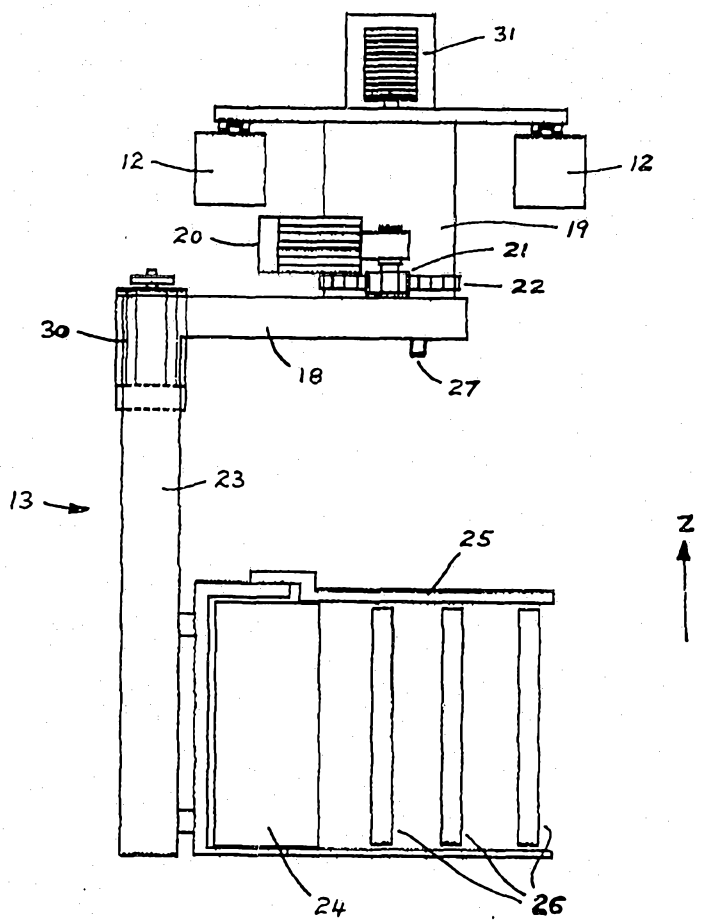

Fig. 4

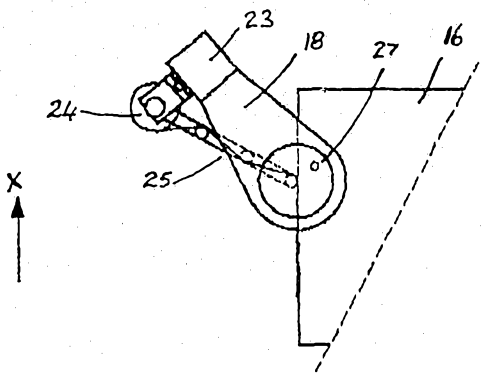

Fig. 5

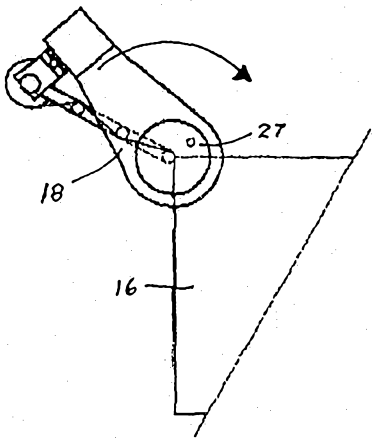

Fig. 6

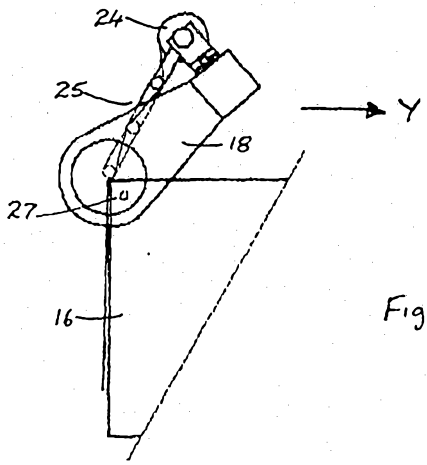

Fig. 7