May 30, 1950 C. AUSENDA 2,509,717

TELESCOPING DIPOLE

Filed Feb. 26, 1948 3 Sheets-Sheet 1

Fig. 1.

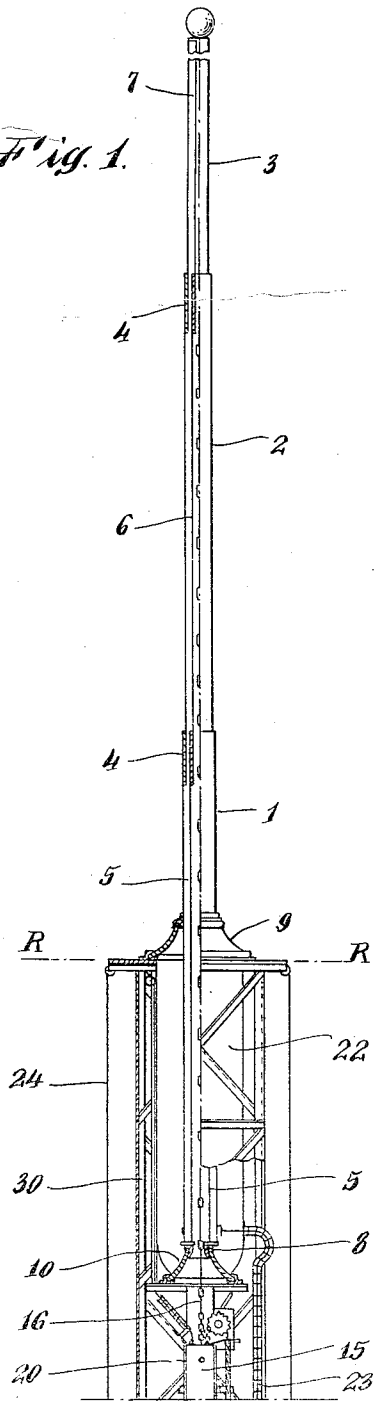

Fig. 2.

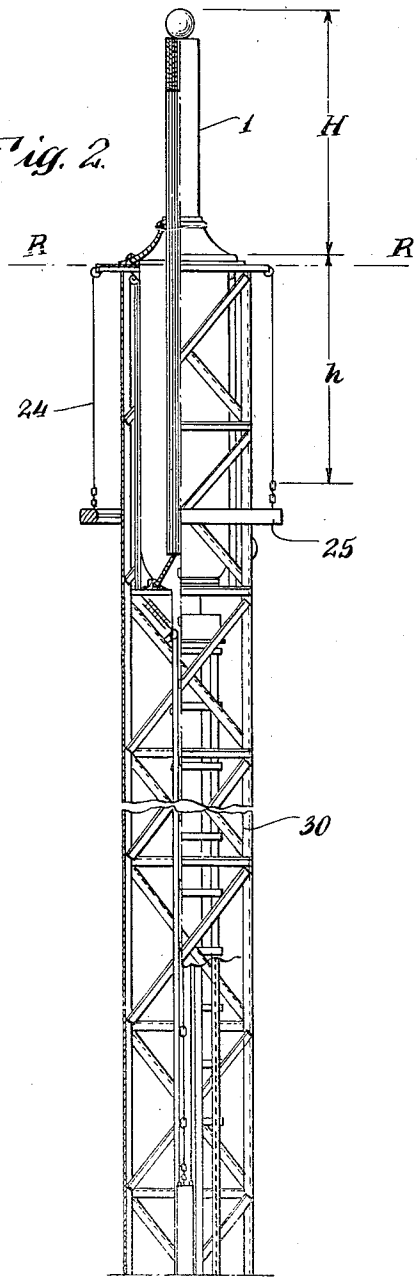

INVENTOR.
Carlo Ausenda
BY Hamilton, Cole & Co.

AGENTS.

May 30, 1950 C. AUSENDA 2,509,717

TELESCOPING DIPOLE

Filed Feb. 26, 1948 3 Sheets-Sheet 2

Fig. 3.

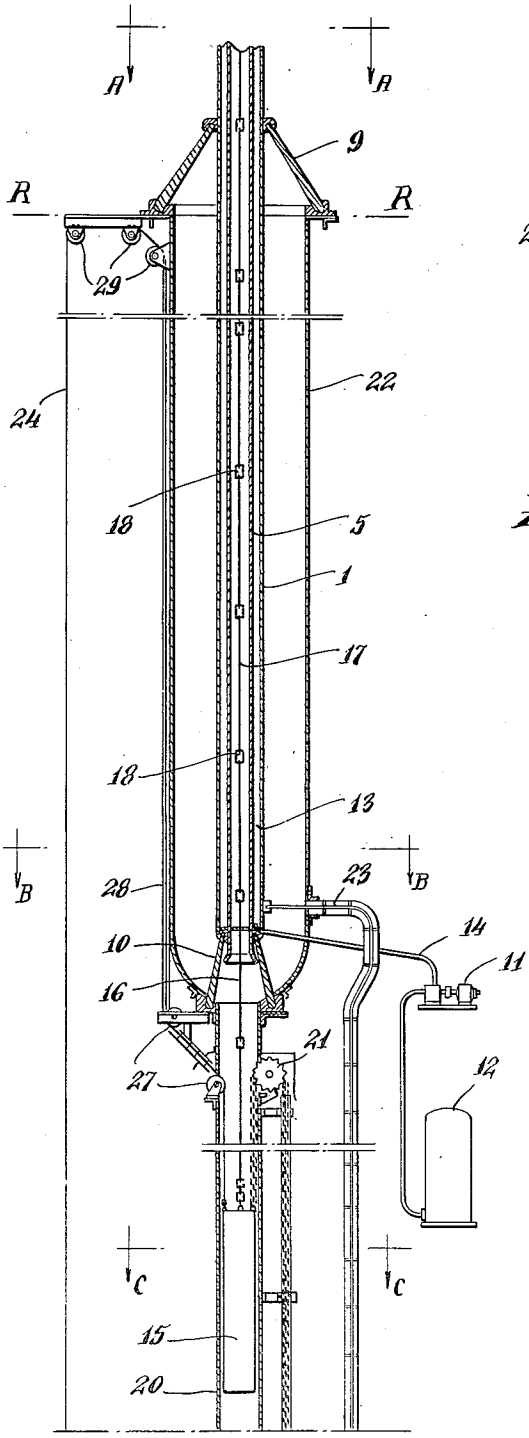

Fig. 4.

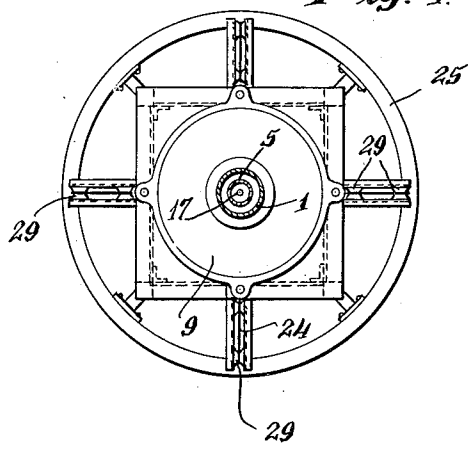

Fig. 5.

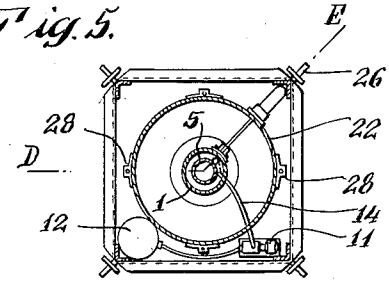

Fig. 6.

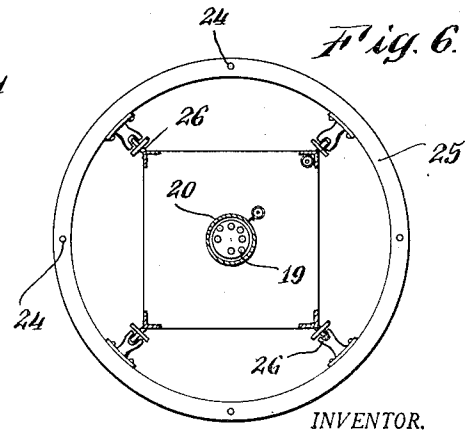

INVENTOR.
Carlo Ausenda
BY Haseltine, Lake & Co.

AGENTS.

May 30, 1950 C. AUSENDA 2,509,717

TELESCOPING DIPOLE

Filed Feb. 26, 1948 3 Sheets-Sheet 3

Fig. 7.

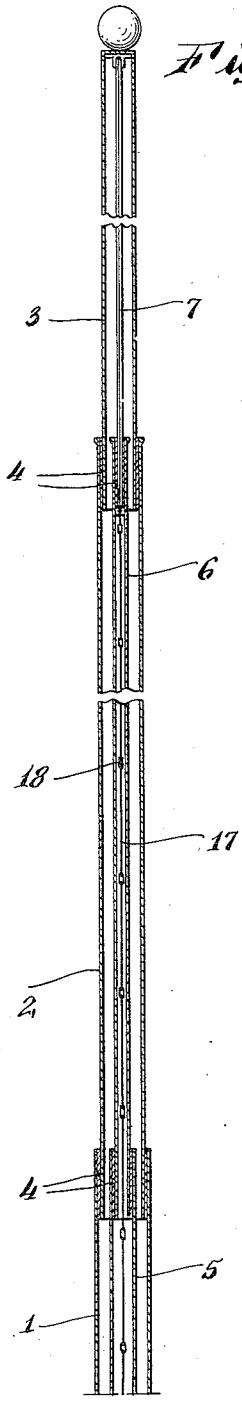

Fig. 8.

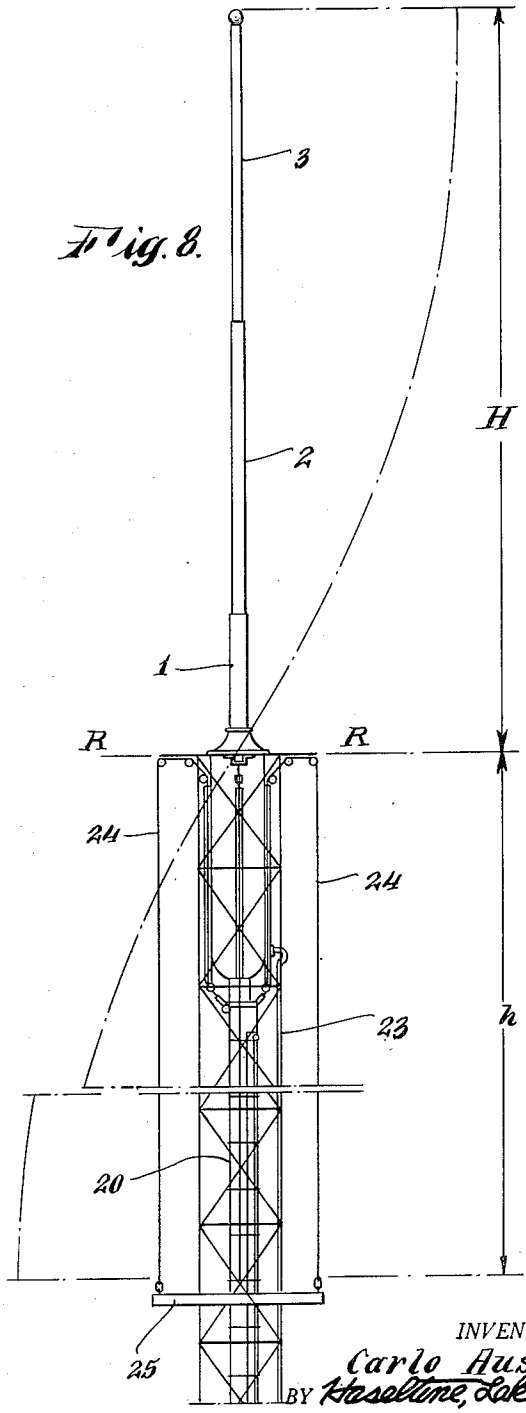

INVENTOR.
Carlo Ausenda
BY Haseltine, Lake & Co.

AGENTS.

Patented May 30, 1950 2,509,717

UNITED STATES PATENT OFFICE

2,509,717

TELESCOPING DIPOLE

Carlo Ausenda, New York, N. Y.

Application February 26, 1948, Serial No. 11,004
In Italy May 15, 1941

Section 1, Public Law 690, August 8, 1946
Patent expires May 15, 1961

3 Claims. (Cl. 250—33)

1

The subject-matter of this invention is a special system of a selfsupporting adjustable and vertical antenna made up of a set of metal pipes collapsible like a telescope by means of a fluid under pressure (oil for instance), which make up the radiating part corresponding to half of the dipole, the other half being made up of conductors operated by pulleys taking part in the collapsing of the pipes so as to always have a perfect dipole.

In the drawings:

Figure 1 is an elevation in part section of an antenna according to the invention.

Figure 2 is a similar view of an antenna mounted on a mast.

Figure 3 is a section through the telescoping parts of the antenna.

Figure 4 is a plan view of the antenna as seen from above.

Figure 5 is a section through line B—B of Figure 3.

Figure 6 is a section of line C—C of Figure 3.

Figure 7 is a view similar to Figure 3 of the extended part of the antenna above the line A—A.

Figure 8 is a diagram of the radiation from the antenna according to the invention.

With reference to Fig. 1, the antenna consists of a set of three or more pipes 1, 2 and 3 of steel or other metal which go into each other like a telescope in special glands 4 which are perfectly oiltight and these pipes make up the radiating system.

In the inside of the aforesaid set and axially arranged with the pipes, there is a second set of telescopic pipes 5, 6 and 7, which also run in one another and are of such cross-sectional dimensions as to leave a certain space between the inside pipe and the pipe of the corresponding outside set. Also the second set of pipes is provided with a thoroughly oiltight gland, and furthermore the inside pipe with a smaller diameter 7 (which can also be a solid drawn bar) is keyed to the upper end of the terminal pipe of the outside set.

In this way a similar movement of the first set corresponds with any movement of the second.

The fixed or lower pipe 1, namely that with the larger diameter, of the outside set is provided at its lower end with a perfectly oil-tight diaphragm 8 through which the fixed or lower pipe of the inside set 5 can pass and it is keyed to same which is always perfectly tight.

It can be seen from the foregoing description how a perfectly tight chamber is obtained whose walls are respectively the two sets of pipes, i.e., the outside and the inside.

The double column of telescope pipes is assembled at the upper end of a lattice pole 30 Fig. 2

2

and axially in regard to same with the outside fixed pipe locking for about two thirds of its height in the end of the pole and it is electrically insulated in regard to same by means of a special outlet insulator 9 placed above and of a frusto-conical shape which is such as to prevent water from coming in; and a second lower supporting insulator 10.

The unit comprising the two aforesaid insulators gives a perfect lock and thereby makes the column and pole unitary.

A small oil pump 11 arranged on the platform (see section B—B of Fig. 5) which withdraws the oil from a tank 12, sends the oil under pressure into the hollow 13 between the two sets of pipes of the antenna (see Fig. 3) and it passes through a length of rubber piping 14 and another of insulating material, which prevents the passage of current between the transmitting antenna and the pump. According to the amount of oil which is pumped into the said hollow, the telescopic antenna will rise more or less in accordance with the desired height. On the other hand by making the pump operate with suction, the telescopic antenna will go down to the extent of the amount required. To make the operation of going down easier, the telescopic antenna is provided with a suitable cylindrical counterweight 15 having a limited diameter and a substantial height which is hung on a cord, metal cable or the like 16 made up of a set of sections 17 divided up electrically by insulators 18 (see Figs. 3–7). The aforesaid cable section, which is long enough to allow the maximum run of the counter-weight and which is equal to the maximum run of the antenna, goes into the inside hollow of the telescopic column, obtained with the use of a set of inside pipes, and reaches the lower end of the upper rod of the inside set where it hangs.

In this way, to each position of the antenna, one position and one position only of the counter-weight corresponds, which is nevertheless electrically and perfectly insulated from the antenna on account of the insulators 18 which are sectioned as mentioned hereinbefore.

To avoid having the counter-weight oscillate in response to the outside weather conditions in any way, it is guided by two vertical guides 19 (see section C—C of Fig. 6) along the whole of its run and it is furthermore provided with a cylindrical shaped outer sheet metal protecting guard 20 fixed to the pole at each section.

If the counter-weight is coupled with any position repeater system, of the impulse type for instance 21, it will send to a dial in the operator's cabin, the exact position in which the telescopic antenna is at any moment.

The telescopic antenna, in the section in which the column locks in the upper end of the pole, is provided with a sheet metal screen cover 22 whose

diameter is equal to 3.2 times the diameter of the outside pipe of the column. This sheet metal covering which is in electric coupling with the ground, acts in regard to the antenna as a perfect screen of the locked section of antenna and allows radiation to one column section only which is over its upper terminal surface (plan R—R see Fig. 3). The feed cable 23 passes through this screen from the base of the pole; the said cable is of the screened type and its inside conductor is coupled to the antenna, whereas the screening is electrically joined to the screening pipe. This cable has impedence equal to that of the section of a screened vertical antenna described above.

The antenna system is furthermore completed by a set of conducting cable sections 24 (four, six or more according to convenience) arranged symmetrically in regard to a horizontal section of the pole, which go down outside of the pole owing to the action of a ring shaped counter-weight 25 (see Fig. 4 too) guided by guides 26 arranged along the outside corner of the pole. The said conductors consist of copper cable sections insulated at the end coupled with the ring shaped counter-weight and they all come from one point only of the cylindrical counter-weight to which each has its opposite end keyed. They go up in the protection pipe of same; at the upper end of the pipe by means of the set of pulleys 27 they widen out and pass into box shaped chambers 28 outside of the protecting screen generators in the locked tract of the antenna. When they have reached the height of the surface of the top of the pole (plan R—R), through another set of pulleys 29 they go horizontally and radially towards the outside and then go down again vertically to the ring shaped counter-weight (Fig. 3).

A particular of the system of adjustment of the cable sections is that the free outside vertical section h comprised between the surface of symmetry and the end insulators, is adjusted in the beginning so as to be equal to the height of the section of telescopic antenna jutting out above at the symmetry surface H (see Fig. 2).

This adjustment keeps constant for all the positions taken by the telescopic antenna seeing that the inside cylindrical counter-weight (which is that to which the cable sections are fixed) moves rigidly together with the antenna.

The system of the telescopic antenna and of the outside cable sections forms a dipole and figure 8 represents the diagram of distribution of the tension in the system made up as described above, while on the other hand with operation of the antenna obtained by remote control of the pressure pump, the dipole can be tuned in with any required wave length included between two required limits.

The radio transmitting antenna described hereinbefore offers the advantage of giving a perfectly round field with the highest possible yield for any intermediate wave length between its minimum and maximum and furthermore of being able to work independently in regard to the service supplied by the lattice pole or structure underneath, in regard to which it can be perfectly insulated and screened with the means described hereinbefore.

What I claim is:

1. A telescopic antenna mast structure comprising two sets of vertically slidable tubular telescopic sections having fluid tight slidable connections therebetween, one of said sets having less tubular cross-section than the other of said sets and being mounted concentrically within the other set to provide a telescopic volume between the concentric tubular walls, a cable connected with the upper end of the mast and passing through the hollow inside of the inner set of telescopic sections, the other end of said cable being attached to a counterweight, a source of fluid, and means to convey controllable amounts of said fluid to said telescopic volume and thereby adjust the telescopic height of the mast structure.

2. A telescopic antenna mast structure comprising two sets of vertically slidable tubular telescopic sections having fluid tight slidable connections therebetween, one of said sets having less tubular cross-section than the other of said sets and being mounted concentrically within the other set to provide a telescopic volume between the concentric tubular walls, a cable connected with the upper end of the mast and passing through the hollow inside of the inner set of telescopic sections, said cable having a plurality of insulating beads spaced along its length, the other end of said cable being attached to a counterweight, a source of fluid, and means to convey controllable amounts of said fluid to said telescopic volume and thereby adjust the telescopic height of the mast structure.

3. A telescopic antenna mast structure comprising two sets of vertically slidable tubular telescopic sections having fluid tight slidable connections therebetween, one of said sets having less tubular cross-section than the other of said sets and being mounted concentrically within the other set to provide a telescopic volume between the concentric tubular walls, a cable connected with the upper end of the mast and passing through the hollow inside of the inner set of telescopic sections, the other end of said cable being attached to a counterweight, the telescopic mast structure being supported in insulated relation on a base framework having a height greater than the maximum extended antenna radiating height of said mast, a radiating cable assembly depending from the top of said base structure to extend downward an adjustable distance on the outside of said base, said radiating cable assembly being connected with said counterweight to adjust its downward length to be equal to the extended antenna radiating height of said mast, said cable assembly being connected to one terminal of the energy to be radiated and said mast being connected to the other terminal of said energy, a source of fluid, and means to convey controllable amounts of said fluid to said telescopic volume and thereby adjust the telescopic height of the mast structure.

CARLO AUSENDA.

REFERENCES CITED

The following references are of record in the file of this patent:

UNITED STATES PATENTS

Number	Name	Date
2,172,117	Beaufort et al.	Sept. 5, 1939
2,173,095	Byrne	Sept. 19, 1939
2,232,693	Dow	Feb. 25, 1941
2,253,379	Kinn	Aug. 19, 1941
2,440,689	Irby	May 4, 1948

FOREIGN PATENTS

Number	Country	Date
801,573	France	Aug. 7, 1936